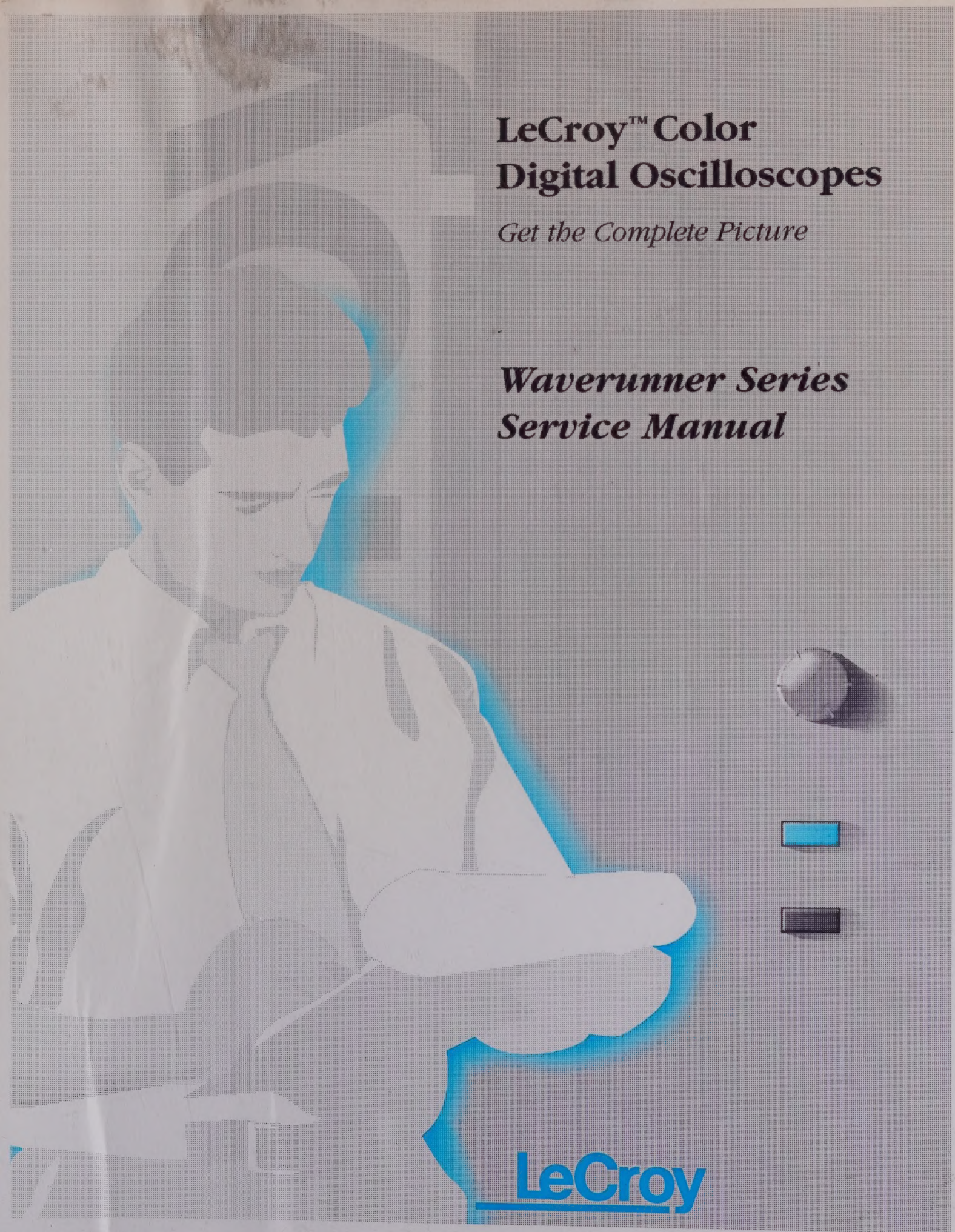

LeCroy™ Color Digital Oscilloscopes

Get the Complete Picture

Waverunner Series Service Manual

LeCroy

LeCroy waverunner

LT Series

Service Manual

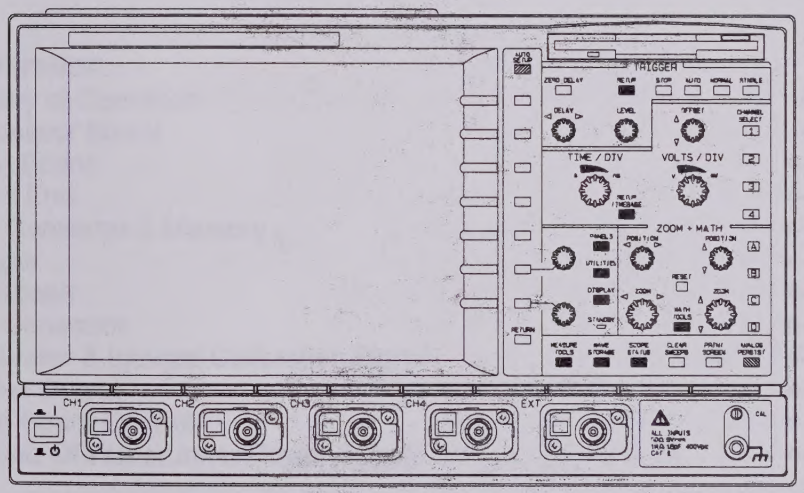

Version A- October 1999

LeCroy

LeCroy Corporate Headquarters

700 Chestnut Ridge Road
Chestnut Ridge, NY 10977-6499
USA

Tel : (914) 425-2000
Fax : (914) 425-8967
http://www.lecroy.com

Copyright © October 1999. LeCroy is a registered trade-mark of LeCroy Corporation.
All rights reserved. Information in this publication supersedes all earlier versions.
Specifications subject to change.

LeCroy

Read this First

1.	Warranty and Product Support	1-1
1.1	Warranty	1-1
1.2	Product Assistance	1-1
1.3	Maintenance Agreements	1-1
1.4	Staying Up to Date	1-1
1.5	Service and Repair	1-2
1.6	How to return a Product	1-2
1.7	What Comes with Your Scope	1-2

General Information

2.	General Information	2-1
2.1	Product Assistance	2-1
2.2	Installation for Safe and Efficient Operation	2-1

Specifications

3.	Instrument Architecture Overview	3-1
	Specifications	3-4

Theory of Operation

4.	Theory of Operation	4-1
4.1	Processor Board	4-1
4.2	Main Board	4-10
4.2.1	Front End	4-10
4.2.2	A/D Converter & Memory	4-13
4.2.3	Trigger	4-14
4.2.4	Timebase	4-17
4.2.5	DC Generator	4-20
4.2.6	Calibrator & Internal Calibration Signal	4-20
4.2.7	Signal Output	4-20
4.2.8	Main Board Control	4-20
4.3	Outline Of Waverunner Power Supply	4-25

Performance Verification

5	Performance Verification	5-1
5.1	Introduction	5-1
5.1.1	List of Tested Characteristics	5-1
5.1.2	Calibration Cycle	5-1
5.2	Test Equipment Required	5-2
5.2.1	Test Records	5-2
5.3	Turn On	5-2
5.3.1	PNL Files	5-2
5.4	Input Impedance	5-3
5.4.1	Channel Input Impedance	5-3
5.4.2	External Trigger Input Impedance	5-6
5.5	Leakage Current	5-9
5.5.1	Channel Leakage Current	5-9
5.5.2	External Trigger Leakage Current	5-10

Performance Verification

5.6	Noise	5-11
5.6.1	Rms Noise	5-11
5.6.2	Erroneous Read / Write Test	5-15
5.7	DC Accuracy	5-20
5.8	Offset Accuracy	5-24
5.9	Bandwidth	5-27
5.10	Trigger Level	5-35
5.10.1	Channel Trigger at 0 Division Threshold	5-35
5.10.2	Channel Trigger at +3 Divisions Threshold	5-38
5.10.3	Channel Trigger at -3 Divisions Threshold	5-40
5.10.4	External Trigger at 0 Division Threshold	5-42
5.10.5	External Trigger at +3 Divisions Threshold	5-46
5.10.6	External Trigger at -3 Divisions Threshold	5-48
5.10.7	External/10 Trigger at 0 Division Threshold	5-50
5.10.8	External/10 Trigger at +3 Division Threshold	5-53
5.10.9	External/10 Trigger at -3 Division Threshold	5-55
5.11	Smart Trigger	5-57
5.11.1	Trigger on Pulse Width 10 nsec	5-57
5.11.2	Trigger on Pulse Width 100 nsec	5-59
5.12	Time Base Accuracy	5-60
5.13	Overshoot and Rise Time (10 %-90 %)	5-62
5.14	Overload	5-65

Test Record

Table 1	LT Series Test Report	1 of 12
Table 2	Impedance Test Record	2 of 12
Table 3	Leakage Voltage Test Record	2 of 12
Table 4	RMS Noise Test Record	3 of 12
Table 5	Erroneous Read / Write Test	3 of 12
Table 6	DC Accuracy Test Record	4 of 12
Table 7	Offset Test Record	5 of 12
Table 8	DC 50Ω, 50 mV/div. Bandwidth Test Record	6 of 12
Table 9	DC 50Ω, 100 mV/div. Bandwidth Test Record	7 of 12
Table 10	DC 50Ω, Bandwidth Limiter Test Record	8 of 12
Table 11	Channel DC Trigger Test Record	9 of 12
Table 12	Channel HFREJ Trigger Test Record	9 of 12
Table 13	External & Ext/10 DC and HFREJ Trigger Test Record	10 of 12
Table 14	Smart Trigger Test Record	10 of 12
Table 15	Time Base Test Record	11 of 12
Table 16	Rise Time and Overshoot Test Record	11 of 12
Table 17	Overload Trip Test Record	12 of 12

Maintenance

6.	Maintenance	6-1
6.1	Introduction	6-1
6.1.1	Safety Precautions	6-1
6.1.2	Antistatic Precautions	6-1
6.2	Software Update Procedure	6-2
6.2.1	Upgrading Firmware	6-2
6.2.2	Software Options	6-3
6.2.2.1	Changing Software Option Key	6-3
6.3	Equipment and Spare Parts Recommended for Service	6-4
6.3.1	Test Equipment Required	6-4
6.3.2	LT344/344L and LT342/342L Spare Parts	6-4
6.4	Board Exchange Procedure	6-4
6.4.1	Processor Board Exchange Procedure	6-4
6.4.2	Main Board Exchange Procedure	6-4
6.4.3	Power Board Exchange Procedure	6-5
6.5	Troubleshooting and Flow Charts	6-5
6.5.1	Introduction	6-6
6.5.2	Line Fuses Replacement	6-6
6.5.3	Initial Troubleshooting Chart	6-6
6.5.4	Fan Problem	6-8
6.5.5	Power Supply Voltages Problem	6-9
6.5.6	Display Problem	6-10
6.5.7	Front Panel Controls Do not Operate	6-11
6.5.8	Remote Control GPIB & RS232 Problem	6-12
6.5.9	Floppy Disk Drive Problem	6-13
6.5.10	Performance Verification Fails	6-14
6.5.11	Graphic Printer Problem	6-15
6.5.12	Centronics Problem	6-16
6.5.13	Hard Disk Drive Problem	6-17

Mechanical Parts Removal

7.	Mechanical Parts Removal	7-1
A.	Removal of the Upper Cover Assembly	7-1
B.	Removal of the Bottom Cover Assembly	7-4
C.	Removal of the Printer Assembly	7-5
D.	Removal of the Floppy Assembly	7-7
E.	Removal of the CPU Board	7-8
F.	Removal of the Main Board	7-10
G.	Removal of the Power Supply Assembly	7-13
H.	Removal of the Front Panel Assembly	7-15
I.	Removal of the Rear Panel Assembly	7-20

Schematics, Layouts, Parts List

Schematics, Layouts

Board/Layouts	No	Description	Circuit Number	Page
	1	OVER ALL	KBWDS02027105	8-3
Main Board	2	CH1 FRONT END	KBWDS24121105	8-5
	3	CH2 FRONT END	KBWDS24122105	8-7
	4	CH3 FRONT END	KBWDS24123105	8-9
	5	CH4 FRONT END	KBWDS24124105	8-11
	6	EXT TRIGGER	KBWDS24125105	8-13
	7	CH1 A/D CNTV	KBWDS22050105	8-15
	8	CH2 A/D CNTV	KBWDS22051105	8-17
	9	CH3 A/D CNTV	KBWDS22052105	8-19
	10	CH4 A/D CNTV	KBWDS22053105	8-21
	11	TRIG SELECTOR	KBWDS34038105	8-23
	12	400MHZ OSC	KBWDS20043105	8-25
	13	TV SYNC SEP	KBWDS34039105	8-27
	14	TIME BASE	KBWDS34040105	8-29
	15	T/D CNVT	KBWDS34041105	8-31
	16	CAL SIGNAL	KBWDS22054105	8-33
	17	DC GENE 1/2	KBWDS11040105	8-35
	18	DC GENE 1/2	KBWDS11041105	8-37
	19	MAIN CONT 1/2	KBWDS11042105	8-39
	20	MAIN CONT 2/2	KBWDS11043105	8-41
	21	POWER CONNECTOR	KBWDS02029105	8-43
Layouts				
	Main Board1/2			8-45
	Main Board2/2			8-47
CPU Board	31	CPU	KBWDS10039105	8-49
	32	DRAM	KBWDS12026105	8-51
	33	BUS CONTROL	KBWDS11045105	8-53
	34	VGA CONTROL	KBWDS41011105	8-55
	35	32BIT I/O	KBWDS13016105	8-57
	36	MAIN BOARD I/F	KBWDS13017105	8-59
	37	8BIT I/O	KBWDS13018105	8-61
	38	EXTERNAL I/F	KBWDS13019105	8-63
	39	PCMCIA	KBWDS13020105	8-65
	40	PANEL BOARD	KBWDS11044105	8-67
	41	KEY BOARD	KBWDS11046105	8-69
	42	LCD CONNECTOR	KBWDS02028105	8-71
Layouts				
	CPU BOARD 1/2			8-73
	CPU BOARD 2/2			8-75
	PANEL BOARD 1/2			8-77
	PANEL BOARD 2/2			8-79
	LCD CONNECTOR 1/1			8-81

Printer	43	DS-901 PRINTER	KBWDS13021105	8-83
Power Board	50	POWER SUPPLY 1/7	KBWDS08038105	8-85
	50	POWER SUPPLY 2/7	KBWDS08038105	8-87
	50	POWER SUPPLY 3/7	KBWDS08038105	8-89
	50	POWER SUPPLY 4/7	KBWDS08038105	8-91
	50	POWER SUPPLY 5/7	KBWDS08038105	8-93
	50	POWER SUPPLY 6/7	KBWDS08038105	8-95
	50	POWER SUPPLY 7/7	KBWDS08038105	8-97
Layouts				
	POWER BOARD			8-99

8.2 Parts List

Board	No	Description		Page
Main Board	2	CH1 FRONT END	For LT344/L	8-101
	3	CH2 FRONT END	For LT344/L	8-102
	4	CH3 FRONT END	For LT344/L	8-104
	5	CH4 FRONT END	For LT344/L	8-105
	6	EXT TRIGGER	For LT344/L	8-107
	7	CH1 A/D CNTV	For LT344/L	8-108
	8	CH2 A/D CNTV	For LT344/L	8-109
	9	CH3 A/D CNTV	For LT344/L	8-110
	10	CH4 A/D CNTV	For LT344/L	8-111
	11	TRIG SELECTOR	For LT344/L	8-112
	12	400MHZ OSC	For LT344/L	8-113
	13	TV SYNC SEP	For LT344/L	8-114
	14	TIME BASE	For LT344/L	8-115
	15	T/D CNVT	For LT344/L	8-116
	16	CAL SIGNAL	For LT344/L	8-117
	17	DC GENE 1/2	For LT344/L	8-117
	18	DC GENE 1/2	For LT344/L	8-118
	19	MAIN CONT 1/2	For LT344/L	8-118
	20	MAIN CONT 2/2	For LT344/L	8-119
	21	POWER CONNECTOR	For LT344/L	8-119
Main Board	2	CH1 FRONT END	For LT342/L,LT322	8-120
	3	CH2 FRONT END	For LT342/L,LT322	8-121
	6	EXT TRIGGER	For LT342/L,LT322	8-123
	7	CH1 A/D CNTV	For LT342/L,LT322	8-124
	8	CH2 A/D CNTV	For LT342/L,LT322	8-125
	11	TRIG SELECTOR	For LT342/L,LT322	8-126
	12	400MHZ OSC	For LT342/L,LT322	8-127
	13	TV SYNC SEP	For LT342/L,LT322	8-128
	14	TIME BASE	For LT342/L,LT322	8-129
	15	T/D CNVT	For LT342/L,LT322	8-130
	16	CAL SIGNAL	For LT342/L,LT322	8-131
	17	DC GENE 1/2	For LT342/L,LT322	8-131
	18	DC GENE 1/2	For LT342/L,LT322	8-132
	19	MAIN CONT 1/2	For LT342/L,LT322	8-132
	20	MAIN CONT 2/2	For LT342/L,LT322	8-133
	21	POWER CONNECTOR	For LT342/L,LT322	8-133

Board	No	Description		Page
Main Board	2	CH1 FRONT END	For LT224	8-134
	3	CH2 FRONT END	For LT224	8-135
	4	CH3 FRONT END	For LT224	8-137
	5	CH4 FRONT END	For LT224	8-138
	6	EXT TRIGGER	For LT224	8-140
	7	CH1 A/D CNTV	For LT224	8-141
	8	CH2 A/D CNTV	For LT224	8-142
	9	CH3 A/D CNTV	For LT224	8-143
	10	CH4 A/D CNTV	For LT224	8-144
	11	TRIG SELECTOR	For LT224	8-145
	12	400MHZ OSC	For LT224	8-146
	13	TV SYNC SEP	For LT224	8-147
	14	TIME BASE	For LT224	8-148
	15	T/D CNVT	For LT224	8-149
	16	CAL SIGNAL	For LT224	8-150
	17	DC GENE 1/2	For LT224	8-150
	18	DC GENE 1/2	For LT224	8-151
	19	MAIN CONT 1/2	For LT224	8-151
	20	MAIN CONT 2/2	For LT224	8-152
	21	POWER CONNECTOR	For LT224	8-152
CPU Board	31	CPU		8-153
	32	DRAM		8-153
	33	BUS CONTROL		8-154
	34	VGA CONTROL		8-154
	35	32BIT I/O		8-155
	36	MAIN BOARD I/F		8-155
	37	8BIT I/O		8-156
	38	EXTERNAL I/F		8-156
Printer	43	DS-901 PRINTER		8-157
Power Board	50	POWER SUPPLY 1/7		8-158
	50	POWER SUPPLY 2/7		8-158
	50	POWER SUPPLY 3/7		8-159
	50	POWER SUPPLY 4/7		8-159
	50	POWER SUPPLY 5/7		8-160
	50	POWER SUPPLY 6/7		8-160
	50	POWER SUPPLY 7/7		8-161
	51	PFC UNIT		8-161
	39	PCMCIA		8-162
	40	PANEL BOARD		8-162
	42	LCD CONNECTOR		8-162

1. Warranty and Product Support

It is recommended that you thoroughly inspect the contents of the oscilloscope packaging immediately upon receipt. Check all contents against the packing list/invoice copy shipped with the instrument. Unless LeCroy is notified promptly of any missing or damaged item, responsibility for its replacement cannot be accepted. Contact your nearest LeCroy Customer Service Center or national distributor immediately (see chapter 2 for *contact numbers*).

1.1 Warranty

LeCroy warrants its oscilloscope products for normal use and operation within specifications for a period of three years from the date of shipment. Calibration each year is recommended to ensure in-spec. performance. Spares, replacement parts and repairs are warranted for 90 days. The instrument's firmware has been thoroughly tested and is thought to be functional, but is supplied without warranty of any kind covering detailed performance. Products not made by LeCroy are covered solely by the warranty of the original equipment manufacturer.

Under the LeCroy warranty, LeCroy will repair or, at its option, replace any product returned within the warranty period to a LeCroy authorized service center. However, this will be done only if the product is determined after examination by LeCroy to be defective due to workmanship or materials, and not to have been caused by misuse, neglect or accident, or by abnormal conditions or operation.

1.2 Product Assistance

Note: This warranty replaces all other warranties, expressed or implied, including but not limited to any implied warranty of merchantability, fitness, or adequacy for any particular purpose or use. LeCroy shall not be liable for any special, incidental, or consequential damages, whether in contract or otherwise. The client will be responsible for the transportation and insurance charges for the return of products to the service facility. LeCroy will return all products under warranty with transport prepaid.

Help on installation, calibration, and the use of LeCroy equipment is available from the LeCroy Customer Service Center in your country.

1.3 Maintenance Agreements

LeCroy provides a variety of customer support services under Maintenance Agreements. Such agreements give extended warranty and allow clients to budget maintenance costs after the initial three-year warranty has expired. Other services such as installation, training, enhancements and on-site repairs are available through special supplemental support agreements.

1.4 Staying Up to Date

LeCroy is dedicated to offering state-of-the-art instruments, by continually refining and improving the performance of LeCroy products. Because of the speed with which physical modifications may be implemented, this manual and related documentation may not agree in every detail with the products they describe. For

example, there might be small discrepancies in the values of components affecting pulse shape, timing or offset, and — infrequently — minor logic changes. However, be assured the scope itself is in full order and incorporates the most up-to-date circuitry. LeCroy frequently updates firmware and software during servicing to improve scope performance, free of charge during warranty. You will be kept informed of such changes, through new or revised manuals and other publications.

Nevertheless, you should retain this, the original manual, for future reference to your scope's unchanged hardware specifications.

1.5 Service and Repair

Please return products requiring maintenance to the Customer Service Department in your country or to an authorized service facility. The customer is responsible for transportation charges to the factory, whereas all in-warranty products will be returned to you with transportation prepaid. Outside the warranty period, you will need to provide us with a purchase order number before we can repair your LeCroy product. You will be billed for parts and labor related to the repair work, and for shipping.

1.6 How to return a Product

Contact the nearest LeCroy Service Center or office to find out where to return the product. All returned products should be identified by model and serial number. You should describe the defect or failure, and provide your name and contact number. In the case of a product returned to the factory, a Return Authorization Number (RAN) should be used.

Return shipments should be made prepaid. We cannot accept COD (Cash On Delivery) or Collect Return shipments. We recommend air-freighting.

It is important that the RAN be clearly shown on the outside of the shipping package for prompt redirection to the appropriate LeCroy department.

1.7 What Comes with Your Scope

The following items are shipped together with the standard configuration of this oscilloscope:

- Front Scope Cover
- 10:1 10 MΩ PP006 Passive Probe — *one per channel*
- *Two* 250 V Fuses, AC Power Cord and Plug
- *Operator's Manual* , *Remote Control Manual, Hands-On Guide*
- Performance Certificate or Calibration Certificate, Declaration of Conformity

Note: *Wherever possible, please use the original shipping carton. If a substitute carton is used, it should be rigid and packed so that that the product is surrounded by a minimum of four inches or 10 cm of shock-absorbent material.*

2. General Information

2.1 Product Assistance

Help on installation, calibration, and the use of LeCroy equipment is available from your local LeCroy office, or from LeCroy's

- Customer Care Center, 700 Chestnut Ridge Road, Chestnut Ridge, New York 10977–6499, U.S.A., tel. (914) 578–6020
- European Service Center, 2, rue du Pré-de-la-Fontaine, 1217 Meyrin 1, Geneva Switzerland, tel. (41) 22/719 21 11.
- LeCroy Japan Corporation, Sasazuka Center Bldg – 6th floor, 1-6, 2-Chome, Sasazuka, Shibuya-ku, Tokyo Japan 151-0073, tel. (81) 3 3376 9400

2.2 Installation for Safe and Efficient Operation

Operating Environment

For safe operation of the instrument to its specifications, ensure that the operating environment is maintained within the following parameters:

Temperature ..... 5 to 40 °C (41 to 104 °F) rated.

Humidity ..... Maximum relative humidity 80 % RH (non-condensing) for temperatures up to 31 °C decreasing linearly to 50 % relative humidity at 40 °C

Altitude ..... < 2000 m (6560 ft)

The oscilloscope has been qualified to the following EN61010-1 category:

Installation (Overvoltage) Category II

Protection Class I

Pollution Degree 2

Safety Symbols

Where the following symbols or indications appear on the instrument's front or rear panels, or elsewhere in this manual, they alert the user to an aspect of safety.

..... **CAUTION**: Refer to accompanying documents (for Safety-related information). *See elsewhere in this manual wherever the symbol is present.*

..... **CAUTION**: Risk of electric shock

..... **On (Supply)**

..... Standby **(Supply)**

..... **Earth (Ground) Terminal**

..... **Alternating Current Only**

..... **Chassis Terminal**

..... **Earth (Ground) Terminal on BNC Connectors**

WARNING ..... **Denotes a hazard. If a WARNING is indicated on the instrument do not proceed until its conditions are understood and met.**

WARNING

Any use of this instrument in a manner not specified by the manufacturer may impair the instrument's safety protection.

The oscilloscope has *not* been designed to make direct measurements on the human body. Users who connect a LeCroy oscilloscope directly to a person do so at their own risk. Use only indoors.

Power Requirements

The oscilloscope operates from a 100 V to 240V AC power source at 50 Hz to 60 Hz.

No voltage selection is required, since the instrument automatically adapts to the line voltage present.

Fuses

The power supply of the oscilloscope is protected against short-circuit and overload by means of two **6.3 A/250 V AC** "T"-rated fuses, located above the mains plug.

Disconnect the power cord before inspecting or replacing a fuse. Open the fuse box by inserting a small screwdriver under the plastic cover and prying it open. For continued fire protection at all line voltages, replace only with fuses of the specified type and rating *(see above)*.

Ground

The oscilloscope has been designed to operate from a single-phase power source, with one of the current-carrying conductors (neutral conductor) at ground (earth) potential. Maintain the ground line to avoid an electric shock.

None of the current-carrying conductors may exceed 250 V rms with respect to ground potential. The oscilloscope is provided with a three-wire electrical cord containing a three-terminal polarized plug for mains voltage and safety ground connection. The plug's ground terminal is connected directly to the frame of the unit. For adequate protection against electrical hazard, this plug must be inserted into a mating outlet containing a safety ground contact.

Cleaning and Maintenance

Maintenance and repairs should be carried out exclusively by a LeCroy technician. Cleaning should be limited to the exterior of the instrument only, using a damp, soft cloth. Do not use chemicals or abrasive elements. Under no circumstances should moisture be allowed to penetrate the disk drive analyzer. To avoid electric shocks, disconnect the instrument from the power supply before cleaning.

CAUTION

Risk of electrical shock: No user-serviceable parts inside. Leave repair to qualified personnel.

Power On

Connect the oscilloscope to the power outlet and switch it on using the power On/Standby button, located near the left-hand corner of the instrument below the screen. After the instrument is switched on, auto-calibration is performed and a test of the disk drive analyzer's ADCs and memories is carried out. The full testing procedure takes approximately 10 seconds, after which time a display will appear on the screen.

3. Instrument Architecture Overview

PROCESSORS

The Waverunner central processor (CPU), a PowerPC™ microprocessor, performs the oscilloscope's computations and controls its operation. A range of peripheral interfaces allow you to control remotely, store waveforms and other data, and make hard copies. A support processor constantly monitors the front-panel controls. Waverunner either transfers data to display memory for direct waveform display, or stores it to reference memories, for fast data-processing.

ADCs

Each Waverunner channel has an eight-bit Analog-to-Digital Converter (ADC). The instrument's ADC architecture is designed to give excellent amplitude and phase correlation, maximum analog-to-digital conversion performance, large record lengths and superior time resolution.

MEMORIES

Waverunner acquisition memories simplify signal acquisition by producing waveform records that allow detailed analysis over large time intervals. There are four memories for temporary storage, and four more for waveform zooming and processing.

RIS

The Waverunner oscilloscope captures and stores repetitive signals at a maximum Random Interleaved Sampling (RIS) rate of 25 GS/s. This advanced digitizing technique enables measurement of repetitive signals with an effective sampling interval of 40 ps, and a measurement resolution of up to 5 ps.

TRIGGER SYSTEM

You can control Waverunner triggering to a highly specialized degree in accordance with waveform characteristics and chosen trigger conditions. The trigger source can be any of the input channels, line (synchronized to scope's main input supply) or external. The coupling is selected from AC, LF REJect, HF REJect, HF, and DC; the slope from positive and negative. Waverunner SMART Trigger offers a wide range of sophisticated trigger modes matched to special trigger conditions and sets of conditions.

AUTOMATIC CALIBRATION

Waverunner automatic calibration ensures an overall vertical accuracy of typically 1 % of full scale. Vertical gain and offset calibration, and horizontal (time) resolution take place each time you change the volts per division setting. Periodic and temperature-dependent auto-calibration ensures long-term stability at the current setting.

DISPLAY SYSTEM

You control the display's interactive, user-friendly interface using push-buttons and knobs. Display as many as eight different waveforms at once on eight separate grids. The parameters controlling signal capture are simultaneously reported. The Waverunner display presents internal status and measurement results, as well as operational, measurement, and waveform-analysis menus.

The 8.4-inch color flat-panel TFT-LCD screen presents waveforms and data using advanced color management. Overlap-mixing and contrast-enhancement functions ensure that overlapping waveforms remain distinct at all times. Both pre-set and personal color schemes are available.

The Analog Persistence function offers display attributes of an analog instrument with all the advantages of digital technology. The Full Screen function expands waveform grids to fill the entire screen.

A hard copy of the screen can be easily produced by pressing the front-panel PRINT SCREEN button.

INTERFACE AND PANEL SETUPS

Although Waverunner is a truly digital instrument, the front-panel layout and controls are similar to an analog oscilloscope's. Rapid response and instant representation of waveforms on the high-resolution screen add to this impression. Four front-panel setups can be stored internally and recalled either directly or by remote control, thus ensuring rapid front-panel configuration. When power is switched off, the current front-panel settings are automatically stored for subsequent recall at the next power-on.

REMOTE CONTROL

Waverunner has also been designed for remote control operation in automated testing and computer-aided measurement applications. You control the entire measurement process — including cursor and pulse-parameter settings, dynamic modification of front-panel settings, and display organization — through the rear-panel industry-standard GPIB (IEEE-488) and standard RS-232-C ports. See this manual's Chapter 12, *Use Waverunner with PC*, and the *Remote Control Manual.*

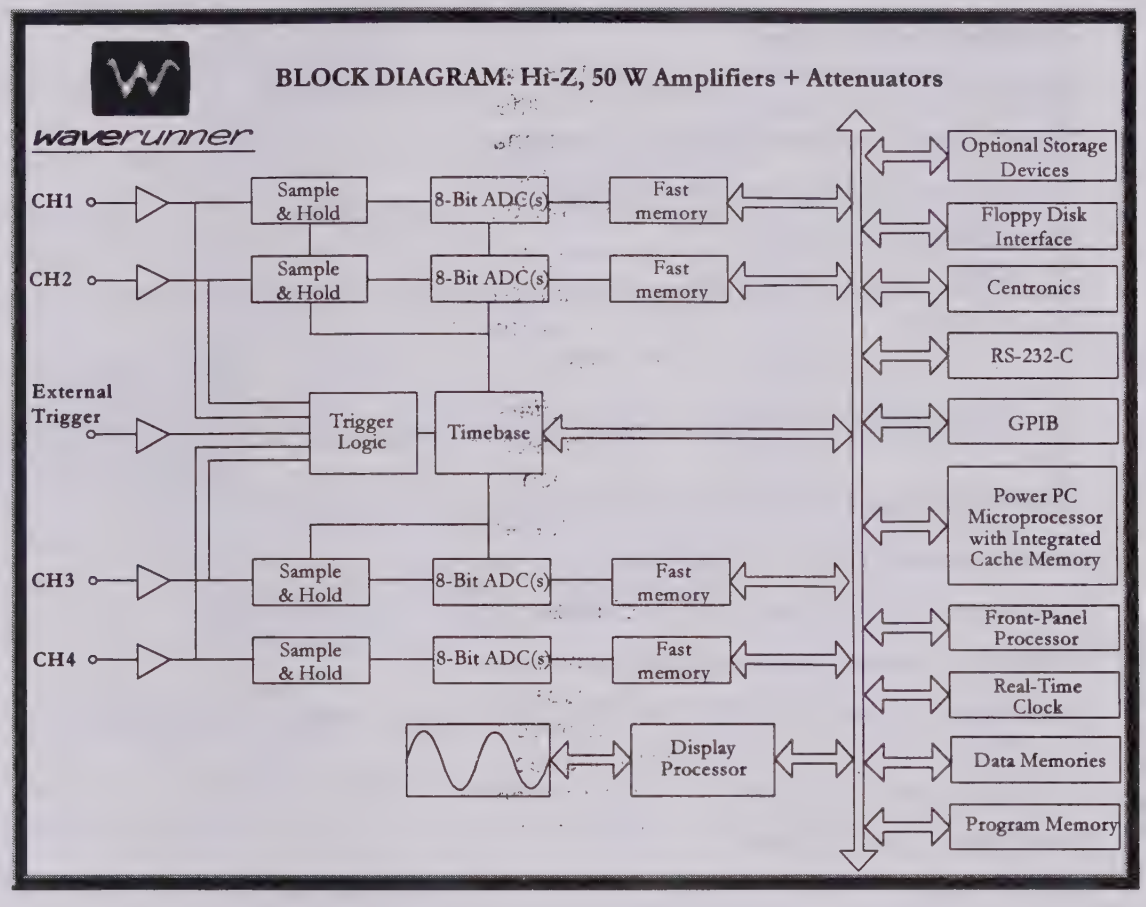
BLOCK DIAGRAM: Hi-Z, 50 W Amplifiers + Attenuators
waverunner
CH1
CH2
CH3
CH4
External Trigger
Sample & Hold
8-Bit ADC(s)
Fast memory
Trigger Logic
Timebase
Display Processor
Optional Storage Devices
Floppy Disk Interface
Centronics
RS-232-C
GPIB
Power PC Microprocessor with Integrated Cache Memory
Front-Panel Processor
Real-Time Clock
Data Memories
Program Memory

Specifications

MODELS

Waverunner LT342/322 Series: Two channels

Waverunner LT344 Series: Four channels

ACQUISITION SYSTEM

Bandwidth (–3dB): LT342/LT344/LT322:500 MHz;LT224:200 MHz @ 50 Ω and at probe tip with PP006

Bandwidth Limiter at 25 MHz and 200 MHz can be selected for each channel LT224 is 25MHz.

Input Impedance: 50 Ω ± 1.0 %; 1 MΩ ± 1.0 % // 16 pF typical

Input Coupling: 1 MΩ: AC, DC, GND; 50 Ω: DC, GND

Max Input: 50 Ω: 5 Vrms; 1 MΩ: 400 V max (peak AC <-5 kHz + DC)

Single Shot Sampling Rate: 500 MS/s

Acquisition Memory: LT342/LT344;250 000 points per channel; 1 M points per channel on L modelsLT224/LT322; 100 000

Vertical Resolution: 8 bits

Sensitivity: 2 mV–10 V/div

Offset Range:

- 2 mV–99 mV/div: ± 1 V
- 100 mV–0.99 mV/div: ± 10 V
- 1 V–10 V/div: ± 100 V

Acquisition Modes			
Mode	**Time Base Setting**	**Maximum Rate**	**Description**
Single Shot			
LT342(L)/LT344(L)	10 ns to 1000 s/div	500 MS/s	One ADC per channel
LT224/LT322	20 ns to 1000 s/div	200 MS/s	
Repetitive			
LT342(L)/LT344(L)	1 ns to 5 µsec/div	25 GS/s	Random Interleaved Sampling (RIS)
LT224/LT322	1 ns to 10 µsec/div	10 GS/s	
Sequence Mode			

LT342/LT344	2–1000 segments	500 MS/s	Stores Multiple Events with time stamp in segmented acquisition memories
LT224/LT322	2–400 segments	200 MS/s	Stores Multiple Events with time stamp in segmented acquisition memories
LT342L/LT344L	2–4000 segments	500 MS/s	
Roll Mode	≤ 500 000 pts: 500 ms–1000s/div ≥ 500 000 pts: 1 s–1000s/div	100 ks/s	Waveform slowly rolls across display when used with slow time bases.

TIMEBASE SYSTEM

Timebases: Main and up to four zoom traces simultaneously

Time/Div Range: 1 ns/div to 1000 s/div

Clock Accuracy: ≤ 10 ppm

Interpolator Resolution: 5 ps

External Clock: ≤ 500 MHz, 50 Ω, or 1 MΩ impedance

TRIGGERING SYSTEM

Modes: NORMAL, AUTO, SINGLE and STOP

Sources: Any input channel, External, EXT 10 or line; slope, level and coupling are unique to each source (except line trigger)

Coupling Modes: DC(DC to 250MHz/LT224; DC to 200MHz), AC(Applox.7.5Hz to 250MHz/LT224; Approx.7.5Hz to 200MHz), HF(to 500MHz/LT224 not have), HFREJ, LFREJ (reject frequency 50 kHz typical)

Pre-Trigger Recording: 0–100 % of horizontal time scale

Post Trigger Delay: 0–10 000 divisions

Holdoff by Time or Events: Up to 20 s or from 1 to 99 999 999 events

Internal Trigger Range: ± 5 div

Maximum Trigger Frequency: Up to 500 MHz with HF coupling

External Trigger Input: ± 0.5 V, ± 5 V with Ext 10; max input same as input channels

SMART TRIGGER TYPES

Signal or pulse width: Triggers on glitches down to 2 ns(LT224 is 3ns). Pulse widths are selectable between < 2.5 ns to 20 s.

Signal interval: Triggers on intervals selectable between 10 ns and 20 s.

TV: Triggers on line (up to 1500) and field 1 or 2 (odd or even) for PAL (SECAM), NTSC, or non-standard video.

State/Edge qualified: Triggers on any input source only if a given state (or transition) has occurred on another source. Delay between sources is selectable by time or number of events.

Dropout: Triggers if the input signal drops out for longer than a selected time out between 25 ns and 20 s.

AUTOSETUP

Automatically sets timebase, trigger, and sensitivity to display a wide range of repetitive signals.

Vertical Find: Automatically sets sensitivity for the selected input signal

PROBES

Model PP006: PP006 with auto-detect: 10:1, 10 MΩ; one probe per channel

Probe System: ProBus Intelligent Probe System supports active, high-voltage, current, and differential probes, and differential amplifiers

COLOR WAVEFORM DISPLAY

Type: Color 8.4-inch flat-panel TFT-LCD with VGA, 640 x 480 resolution

Screen Saver: Display blanks after 10 minutes

Real Time Clock: Date, hours, minutes, and seconds displayed with waveform

Number of Traces: Maximum eight on LT344/LT224 Series, six on LT342/LT322 Series; simultaneously display channel, zoom, memory, and math traces

Grid Styles: Single, Dual, Quad, Octal, XY, Single+XY, Dual+XY; Full Screen gives enlarged view of each style

Waveform Display Styles: Sample dots joined or dots only — regular or bold

ANALOG PERSISTENCE DISPLAY

Analog Persistence and Color Graded Persistence: Variable saturation levels; stores each trace's persistence data in memory

Trace Display: Opaque or transparent overlap

ZOOM EXPANSION TRACES

Style: Display up to four zoom traces

Vertical Zoom: Up to 5x expansion, 50x with averaging

Horizontal Zoom: Expand to 2 pts/div, magnify to 50 000x

Autoscroll: Automatically scan and display a captured signal

RAPID SIGNAL PROCESSING

Processor: Power PC 603e™

LT342/LT322	LT344/LT224	LT342L	LT344L

2.1.1 16 Mbytes	2.1.2 16 Mbytes	2.1.3 32 Mbytes	2.1.4 32 Mbytes
64 MBYTE SYSTEM MEMORY OPTIONAL FOR ALL MODELS			

INTERNAL WAVEFORM MEMORY

Waveform: M1, M2, M3, M4; memory length equal to acquisition memory

Zoom and Math: A, B, C, D; memory length equal to acquisition memory

Memories M1–4 and A–D store full-length waveforms with 16 bits/data point

SETUP STORAGE

For front panel and instrument status: Four non-volatile memories and floppy drive are standard; hard drive and memory card are optional

MATH TOOLS

Simultaneously perform up to four math processing functions; traces can be chained together to perform math on math. Standard functions: add, subtract, multiply, divide, negate, identity, summation, averaging to 1000 sweeps, ERES low-pass digital filters for 11-bit vertical resolution, FFT of 50 kpoint waveforms, Extrema for displaying envelope roof and floor, physical units, rescale (with units), sin x/x, resample (deskew).

MEASURE TOOLS

Cursor Measurements:

- **Relative Time:** Two arrow-style cursors measure time and voltage differences relative to each other with a resolution of ± 0.05 % full scale.
- **Relative Amplitude (Voltage):** Two horizontal bars measure voltage differences at ± 0.2 % fs resolution.
- **Absolute Time:** Cross-hair marker measures time relative to trigger and voltage with respect to ground.
- **Absolute Amplitude (Voltage):** A horizontal reference line cursor measures voltage with respect to ground.

Automated Measurements: Display any five parameters together with their average, high, low and standard deviations.

Pass/Fail: Test any five parameters against selectable thresholds. Limit testing is performed using masks created on the scope or on a PC. Setup a pass or fail condition to initiate actions such as hardcopy output, save waveform to memory, GPIB SRQ, or pulse out.

EXTENDED MATH AND MEASUREMENTS OPTION

Adds math and advanced measurements for general-purpose applications. Math Tools is expanded to include all standard math plus integration, derivative, log and exponential (base e and base 10), square, square root, absolute value, plus data log when using the trend function.

WAVEANALYZER OPTION

Adds math processing to include FFTs of 1 Mpoint waveforms, power spectrum density, spectrum averaging, waveform averaging to one million sweeps, continuous averaging, waveform histograms, and histogram parameters. Includes the Extended Math and Measurement option.

SPECIAL APPLICATION SOLUTIONS

Jitter and Timing Analysis (JTA): Precision cycle-to-cycle timing measurements with enhanced accuracy, histograms on persistence traces, persistence to waveform tracing and full statistical analysis.

PowerMeasure™: A complete solution for the power conversion engineer. Includes timing deskew of voltage and current, and rescale to electrical units.

INTERFACE

Remote Control: Full control via GPIB and RS-232-C

Floppy Drive: Internal, DOS-format, 3.5" high-density

PC Card Slot: Supports memory and hard drive cards

External Monitor Port: 15-pin D-Type VGA-compatible

Centronics Port: Parallel printer interface

Internal graphics printer (optional): 25 mm/s max, 112 mm paper width; provides hardcopy output in <10 seconds

OUTPUTS

Calibrator signal: 500 Hz–1 MHz square wave, –1.0 to +1.0, test point, and ground lug on front panel

Control signals: Choice of trigger ready, trigger out, or Pass/Fail status; TTL levels into 1 MΩ at rear panel BNC (output resistance 300 Ω ± 10 %)

GENERAL

Operating Conditions: Temperature 5–40° C; humidity 80 % non-condensing at 40° C; altitude ≤ 2000 m

Shock and Vibration: Conforms to MIL-PRF-28800P; Class C

Power Requirements: 90–132 V AC and 180–250 V AC; 45–66 Hz; maximum power dissipation 150 VA–230 VA, depending on model

Certifications: CE, UL and cUL

Dimensions (HWD): 210 mm x 350 mm x 300 mm (8.3" x 13.8" x 11.8"); height excludes scope feet

Weight: 8 kg (18 lbs)

Warranty and Calibration: Three years; calibration recommended yearly

4. Theory of Operation

4.1 Processor Board

MPC603e Processor

The PowerPC603e on the processor board is a 4-bit RISC processor having 2x32Kbyte cache and features high speed processing and quick memory access. The processor is designed to operate with an internal clock which is several times the external bus clock cycles and is used under the 32bit mode.

The board consists of two circuit-blocks:

- The 32bit block, that contains the main PowerPC processor, dynamic RAM modules, VGA interface, Super-I/O and main board interface.
- The 8bit block, which incorporates all peripherals and other interfaces for outer connections.

These two circuit-blocks are connected through MC68150 (dynamic bus sizer).

Power Supply

The board requires two power sources (Vcc and +12V). +12V source is used for OP-amp and small-peripheral operation.

The processor requires 3.3V, and all other logic devices are operated by the +5V source. All of the signals are TTL compatible.
The processor allows +5V input signals and does not require logic level conversion.
An OP-amp and MOSFET transistor consist of 3.3V power source. The reference voltage is taken through the voltage-resistor divider network across +5V power source.

32bit Peripherals

There are six devices hooked on the processor's 32bit data bus:

- VGA video controller
- DRAM system
- bus sizer, an interface to 8bit circuit-block
- DMA controller
- Super-I/O
- MAIN board

CPU's Block Diagram

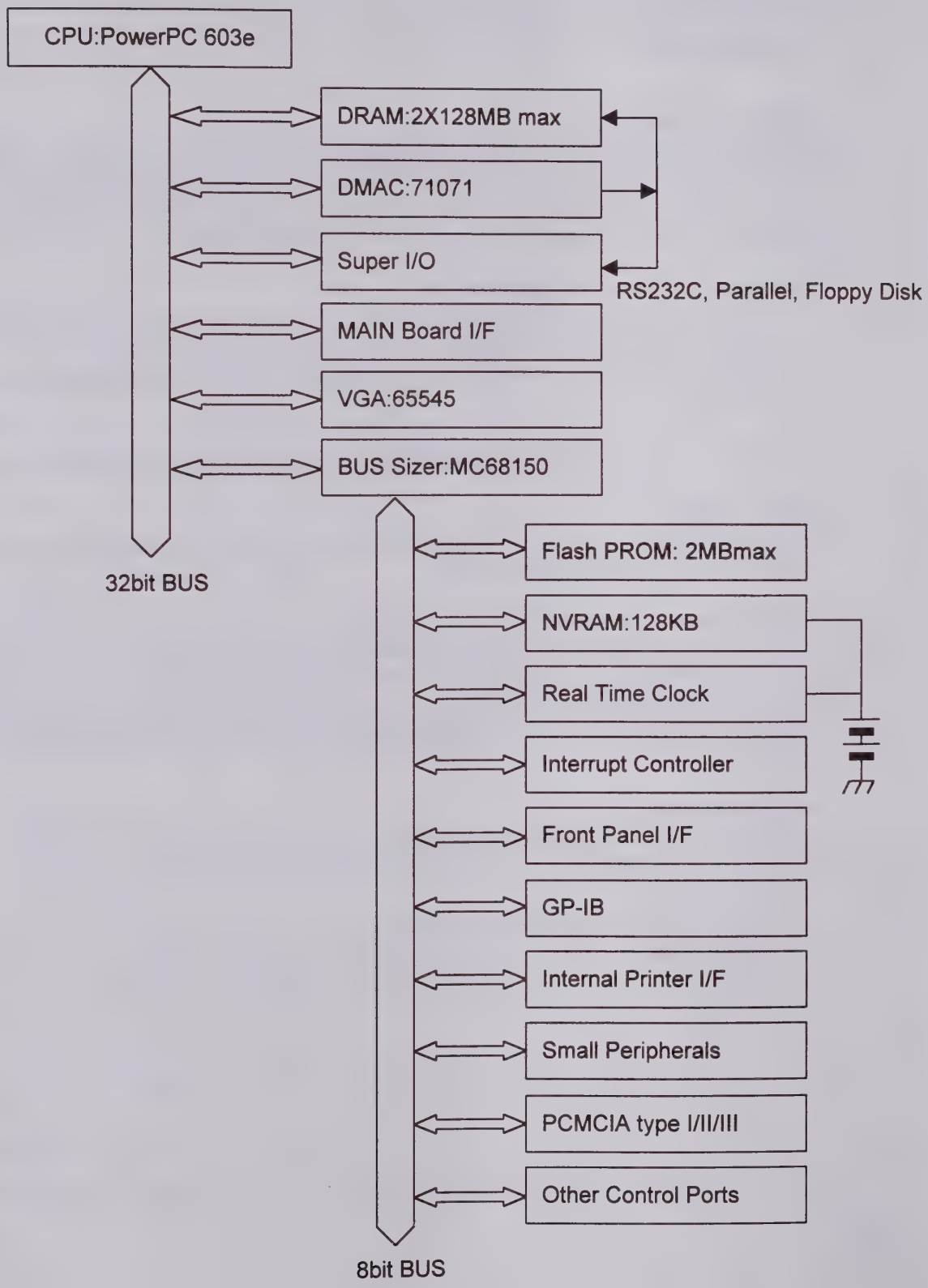

DRAM

The DRAM circuit consists of one or two SIMM modules, constituting from 16MB to a maximum of 128 MB. The SIMM modules to be supported are only of EDO types. The DRAM control circuit is built with one piece each of CPLD and GAL, and several gate ICs.

The DRAMC (IC13) located on the main control circuit, generates all types of bus cycle timing(normal R/W, 2-beat/8-beat bursts of R/W), refresh cycles, and DMA cycles. It also generates signals for automatic increment of column-addresses to be used in burst transfer mode. Furthermore, the DRAMC has a register for setting one or two SIMMs and determining SIMM size (whether it is less than 32MB or more than 64MB), in order to adjust the memory mapping so as not to have gaps in memory mapping according with the memory capacity.

The CAS (IC14) distributes signals for column address selection to the CAS signal circuits of each SIMM chip. CAS is selected by the size of memory access (1, 2, 3, and 4 bytes), accessing start-address, and type of bus cycles (normal, burst, refresh and DMA).

Two multiplexers (IC9 and IC10) switch the address lines of odd and even addresses to be connected with the address lines of each SIMM. The other multiplexer (IC11) switches low order address bits, i.e., routing them either directly to the processor or to the low order address generated in DRAMC.

Normal Access Timing

This is the simplest access possible: the processor puts an address onto the address bus and reads or writes the required data out of or to the DRAM which corresponds with the bus.

The bus width is 32bits, or 4bytes wide, and the CPU performs to read or write operations (of one through four bytes) which are chained in a bus cycle.

Burst Access Timing

A burst access, on the 603e configured with 32bit device operation, performs either two or eight successive reads in DRAM (2-beat or 8-beat burst access). The idea is to put the beginning of an address onto the address bus and read/write data out of or to DRAM every clock cycle, without incrementing the address required by the processor (this is to be achieved by the external logic circuit). Using EDO-DRAM enables to read and write every 30ns of clocks similarly as with one or two SIMMs. The 8-beat access is indicated by an active "low" of NTBST signals and a 32bit access signal (SIZ2..0=011), and the 2-beat access is indicated by an active "high" of NTBST signals and an access size of 64 bits (SIZ2..0=100).

Refresh Timing

The 32 KHz clock from the RTC chip is used to generate the timing to refresh DRAM. Without this clock, the DRAM would not be refreshed and all the data in it would be erased out. DRAMC detects the rising edge and the falling edge of this 32KHz clock. At the each edge, it generates the CAS before RAS refreshes the cycles.

The arbitration logics between other accesses (bus cycle with the processor and DMA cycle) and refresh cycles reside in the DRAMC.

DMA Timing

The DMA access can be used for data transfer to and from floppy disks.
The data is transferred in between the I/O and DRAMs by simultaneously accessing the desired addresses in the Super I/O and DRAMs.
The addresses A0 to A25 (as well as lower addresses up to 64MB on the memory map) can be accessed through the DMA controller. Since the Super I/O is directly connected to its 8bit to 32bit bus without passing through the bus sizer, data transfer can be done only to and from memory areas in which addresses are divided by intervals of 4bytes each.

Memory Mapping

When the main switch is on, the internal software automatically sets the system's memory size to the largest capacity available with the SIMM mounted (2 pieces of 128 MB SIMM size). It also checks whether all the addresses are perennial or not to prevent having "holes" in the address space. Through this operation, available memory capacity in the SIMM mounted is correctly judged and the capacity information is stored again into the DRAMC register. Thus, all the address spaces are assured for perennial address continuation.

VGA controller

The VGA controller chip 65545(IC29) contains the logic circuits to decode its own addresses. It generates all the video signals (RGB, H/V, and all control lines to drive the flat panel), and controls its associated 1 MB video DRAM (to read, write and refresh).
The total of video DRAMs mounted are two pieces of 2MB (but 512KB each of the DRAM only are used).
All timings are extracted from the 16MHz bus clock; therefore, no external crystal or time-base is required. The horizontal and vertical synchronization signals are sent to the external video connector (a half pitch, D-SUB15 pin connector is used).
The 65545 chip can support several bus interfaces (PCI, ISA, VL, etc), the system employs it for VL-bus applications with the mode of 256-color palette operations. The controller has an 18bit color palette and can display 256 colors out of the available 260,000. However, the liquid crystal panel can only use 12-bit color data, and color display is limited to 256 out of 4,096 colors (the color data will be extended to 18bits in the future).
The power supply circuit for the liquid crystal panel has a MOSFET switch that turns the power for the LCD with the reset signal, since the LCD needs to minimize its start-up time.

Super-I/O

This device controls RS-232Cs, floppy disks, and parallel port operations. The controller has its own time-base with a 24MHz crystal. RS-232C can be used by simply connecting the MAX232 buffer (IC31) to it. Since the Super I/O chip has a 16-byte buffer, high speed data transfer is easily carried out.
A 2HD disk drive can be directly connected to the system without any external components other than a piece of pull-up resistor; it can be operated in either

interruption mode or DMA mode.
The parallel interface is also activated without other external components other than a piece of pull-up resistor, for the use of 2-way communication.
This IC chip has an IDE interface function in it, but this board does not support the function.

Bus Control

The DEC32 (IC17) performs decoding operations for the circuits (32bit circuit block) which are directly connected to the processor (except the DRAM).(The DRAMC performs decoding operations for the DRAMs).
The RW32 (IC76) generates the control signals of read/write for the devices associated with the DMA, and the byte enable signals (NBE0-3) for the VGA controller.
When the bus cycle starts, 603e must terminate the bus cycle by returning signals after acknowledging each of the data and addresses, from the outside. The ACK32 (IC19) is used to generate the acknowledgement signals.
The ARBT (IC18) has logics for arbitration between the DMA and processor accessing, and performs forced termination of the bus operation when the bus cycle can not be finished within a defined time.
The ACK8 (IC21) has logics for generation of the acknowledgement signals and read write strobe signals in the 8bit peripheral circuit block.
The DEC8 (IC22) has logics for decoding 8bit peripheral circuits, and a certain circuit involved in the address latch operation.

Bus Sizer

The MPC603e processor does not support dynamic bus sizing, which is performed with the 68K processor family. Each 8bit of a 32bit bus is fixed or assigned with the lower addresses, or 0 through 3 bits. Therefore, if an 8bit device were directly connected to the bus, this device would be seen in 4byte steps each in the memory map area. To avoid this, the 8bit-bus peripheral unit shall be connected to the 32bit-bus through the bus sizer, MC68150 (IC15). The bus sizer divides one bus cycle for accessing 32 bit-bus of the processor into four cycles each of 8bit accessing cycle, and/or assigns 8bit-bus data to a corresponding 8bits within the 32bits.

8bit Peripherals

The following devices are listed as 8bit data bus units:

- PCMCIA Interface
- Flash PROM
- NVRAM
- RTC
- Interrupt Controller
- GPIB Interface
- Small-peripherals Interface
- Internal printer Interface
- Front-Panel I/F
- Other registers and ports

PCMCIA, type I/II/III interface

This interface consists mainly of buffers for both data and address busses.
The CARD (IC71) generates the control signals both for memory card mode and I/O card mode.
The IC65 (D-F/F) holds control bits for the signals resetting the card, switching between the data area and the attribute area, and switching the card's modes. All bits in the register are reset to zero when the _RESET signal goes to active low, which means that their state is also guaranteed at power-up.
The IC66 and the IC67 invert the most significant address bits of the memory card whenever the SWAP jumper is plugged in, so that the first bytes are always allocated to "FFF00000", regardless of the size of the memory card. This allows to boot directly from the PCMCIA memory card used.

Flash PROM

Two pieces of the Intel's 29F008-compatible 1MB PROMs (IC45 and 46) are used to operate in the 8-bit bus mode. These ICs do not require any programming voltage to write.
From a hardware point of view, a flash PROM is regarded the same as an EPROM in read mode.
To erase or write to memory, commands are written into the data bus. Writing and erasing must be performed over monitoring the status-signals (RY/#BY) on the port (IC49).
The program may be seen to start from the Flash PROM. The Flash PROM is, however, not regarded as the program or its program area even when start-up (even when the screen appears) is completed, because the program must be processed in the DRAM after transferring the program content from the Flash PROM into the DRAM.

NVRAM

This memory chip is powered from the VCCO in the RTC. When the main power is set to off, the required power for the NVRAM is fed through the lithium battery installed. When the power is set to on, it is powered from the VCC.
The #CS1 signals are also controlled through the RTC. When the main power is set to off, the RTC sets the chip select to the "high" level through a pull-up resistor to place the SRAM a power-down mode to prevent any accidental overwriting.

RTC

The DS1689 real time clock has several functions:

- Keeping the time-of-day and current-date information while power is off.
- Generating 32KHz clock for DRAM refreshment.
- Giving 128Hz of periodic interrupt signals to force bus accessing from the processor and allowing periodic updating of the time display.
- Providing a unique ID that identifies the origination of scope ID.
- Feeding the power and the chip select signal to the NVRAM.

The chip generates timing clocks necessary for time keeping and driving all other circuits by connecting to 32.768KHz crystal. A few discrete components around it

leave the chip powered, when the system is set to off, by the backup lithium battery while the rest of the board is not powered, and charge the battery when the power is on again.
Accesses from the processor are done through the circuit for the bus separation, for addresses and data are multiplexed.
The unique ID was already written in the RTC by the manufacturer, since every different value must be stored in each chip.

Interrupt Controller

In order to prioritize and control several interrupt sources, it is necessary to use an IC of uPD71059. It scans eight interrupt signals and sends a unique interrupt signal to the processor when an (unmasked) interrupt signal appears.
Interrupt levels are assigned as follows:

level 0	(lowest priority) FDC
level 1	small peripherals
level 2	RS232C
level 3	GP-IB
level 4	PCMCIA(I/O card mode)
level 5	real time clock
level 6	the MAIN board
level 7	(highest priority) unused

The priority in the above can be changed by the software.

Small Peripheral Interface

This 8-bit interface is intended to allow external expansion of the board in addition to the processor board.
The tri-state buffers drive the address and control lines, and bi-directional buffers drive data lines.
The address decoding is processed on each expanded peripheral board. Since the acknowledgement toward each access is also returned by the expanded board, there is no restriction to the amount of wait-states.
The bus clock runs at 16MHz, and a reset line reinitializes the boards as does in the CPU.
Four interrupt lines are also included in this interface, so that interrupt-driven boards can be used.

Front Panel

The front panel is accessed by serial read/write signals passing through the IC47 and IC48.
The CPU board can be reset by resetting the 3 buttons on the front panel. This function becomes effective by setting a bit of IC52 for enabling.
Both LED and BEEP are activated by serial writing. LED and BEEP are initialized off by the resetting operation.

Reset Circuit

The power supply is monitored by the IC4 chip. Whenever the Vcc goes below 4.5V (even for a very short time), a reset pulse, in which the width is determined by the C6's capacity, is generated.
Resetting 3 buttons on the front panel also causes to generate the reset pulse as did in the IC4 when the supply power voltage fell too low.

Bus Error Generation

The 603e expects NTA and NAACK signals for the acknowledgement to the current bus cycle, and inserts wait states during the period NTA and NAACK are kept at "high" levels (any of external devices have not caused to lower the levels). As long as any of the devices does not return the acknowledgement, the bus is to be kept forever in this wait-condition. Then, an external circuit may be required to generate a bus-error signal to break the pending cycle after a given time-out.
The bus error is generated by pulling the NTEA pin of the CPU down to "low". This is the job done by the GAL (ARBT:IC18) which counts the number of wait-states that have already passed through the counter (IC25). An external 8bit counter (IC18) extends the count to 128 wait-cycles with the 8MHz clock (125ns x128 =16us) before triggering the bus error. With this operation, the system can successfully force the terminate of the current cycle.
Some devices, such as the VGA video controller, have their own logic to generate bus error. Therefore, any access operation for such devices is not entirely related to this circuit.

GPIB Interface

The NEC 7210-compatible device, NAT7210, is employed as the controller, and the TI's conventional drivers, 75160 and 75161, are also used as the receivers.

Internal Printer Interface

Printer control is the same as for the normal Centronics interface. This circuit consists of buffers only.

Relation of I/O Structure to the associated GALs and CPLDs

The following block-diagram describes the flow in the decoder and the relationships between the acknowledgement to be returned to the CPU and GALs/CPLDs. Three-line boxes are GALs and CPLDs, and one-line boxes indicate other ICs and function blocks.

- DEC32 is the main decoder that performs the decoding operation for five devices. In this operation, however, decoding of the DRAM is excluded.
- DRAMC performs decoding of the DRAM and controls all access operations.
- CAS selects memory chips in the SIMMs according to sizes and addresses of DMA accessing.
- DEC8 is the main decoder in the 8bit-bus area, and does the decoding for three devices.
- CARD generates control signals to access PCMCIA.
- ACK32 generates ACK signals which inform the processor of the completion of bus cycle. The signals are made from the defined time after accessing each

device or from the acknowledgement signal which is returned by each device.

- ACK8 informs the termination of the bus which completed within the defined time after accessing 8bit devices. Regarding the PCMCIA and small peripherals, however, the termination can be delayed by giving an external wait signal.

The GALs which are not shown in this block-diagram are the ARBT and RW32.

- ARBT does the bus arbitration during the DMA's execution. It also generates a bus error when the bus cycle passes over the defined time.
- RW32 controls both the RW signals when the DMA is executed and the byte-enable signals for the VGA controller.

Block Diagram representing relations between I/O Decoding and Acknowledgement

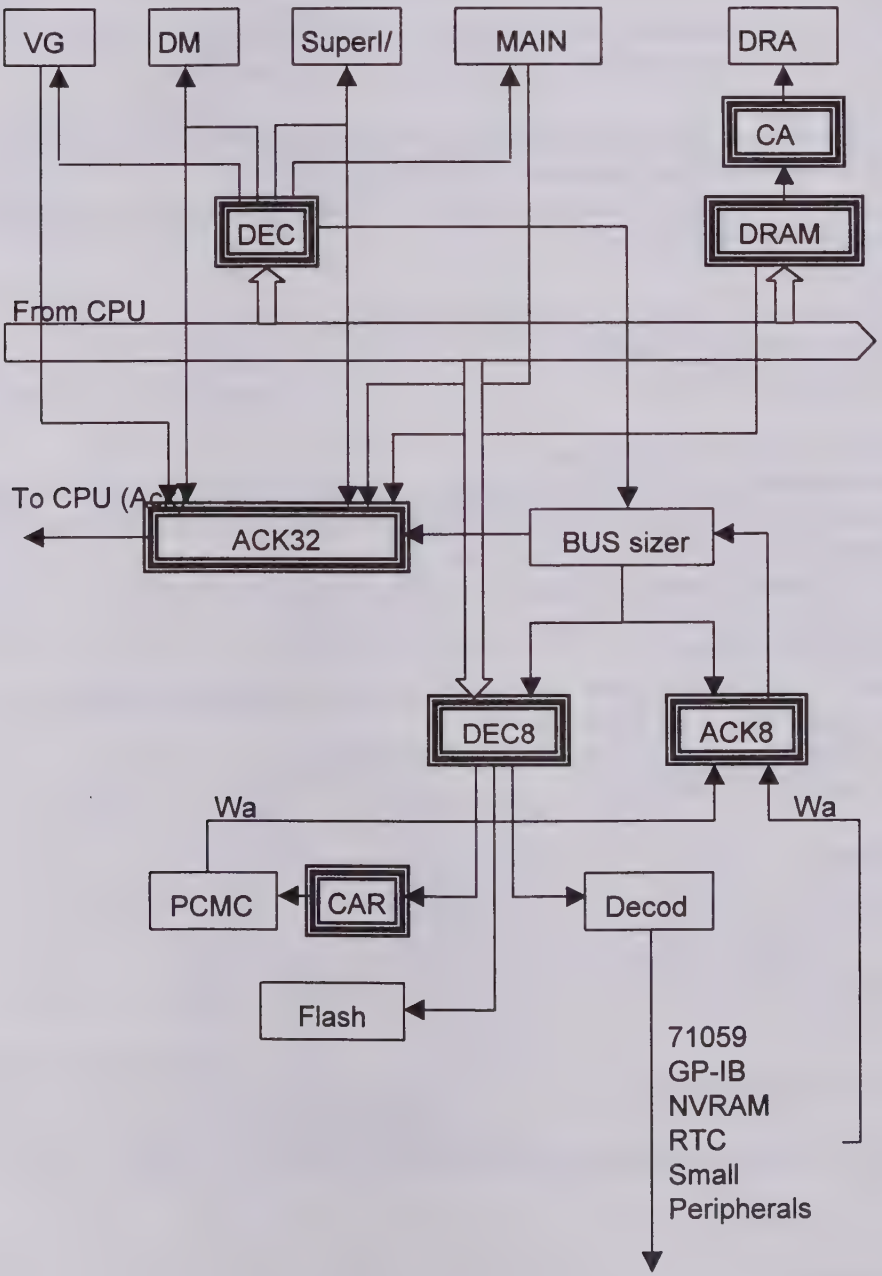

4.2 Main Board

Introduction

The main board is divided into the following sections:

- Front End
- A/D Converter & Memory
- Trigger
- Timebase
- DC Generator
- Calibrator & Internal Calibration signal
- Signal output
- Main Board Control

4.2.1 Front End

The front end processes an analog signal for ADC and trigger, consists of High impedance buffer, amplifier HFE428, and trigger comparator HTR420.

The main functions of the Front end without the amplifier HFE428 and HTR420 are:

- Four channels operation, calibration with Software control.
- Input protection (clamp + thermal detection) and coupling (AC, DC, 1MΩ, 50Ω).
- Attenuator by 10 & by 100.
- Offset control.
- Offset control of ±1V and CAL control of ±1.4V.
- Detection of 50Ω over loading.
- Input of signal for calibration.

The main functions of HFE428 are:
Amplitude normalization for the ADC system : at the BNC the dynamic range is 16 mV to 80V FS (full scale) and the ADC/TRIG system input is 500 mV differential.
Fine adjustment of gain and variable control
Band width limiter of 25MHz, 200MHz

Main function of HFE420 are:
Generation of trigger signal (analog input and digital output) with comparator
Setting of trigger level (TRIG,VALIDATE)
Setting of trigger coupling (DC,AC,LFREJ,HFREJ,HF)
Setting of slope (+,-,WINDOW)

Block diagram 1

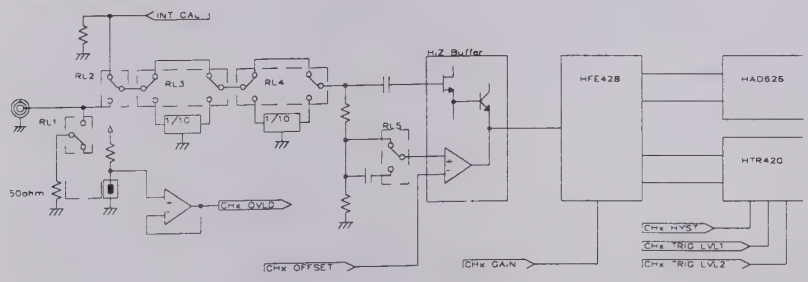

Control

Relay control

The relay of the attenuator is set by selecting the input coupling and the gain as shown in the table below.

RL1, 2 and 5 are driven with +5V/0V, and RL3, 4 is driven with +5V/-5V.

Input coupling

Control port	Relay	GND	1M,DC	1M,AC	50,DC
GND/*MES	RL2	H	L	L	L
1M/*50	RL1	H	H	H	L
AC/*DC	RL5	H	L	H	L
1/*10	RL3	H	X	X	X
1/*100	RL4	L	X	X	X

Switch of attenuator

Control port	Relay	2mV-99mV	100mV-0.99V	1V-10V
1/*10	RL3	H	L	L
1/*100	RL4	H	H	L

Divide gain

The gain ratio in each block and input range is a table below.

At the BNC the dynamic range is 16 mV to 80V FS (full scale) and the output is 500 mV differential (HAD626 input).

	Range V/div											
Block	2mV	5mV	10mV	20mV	50mV	100mV	200mV	500mV	1V	2V	5V	10V
ATT 1/*10	1	1	1	1	1	0.1	0.1	0.1	0.1	0.1	0.1	0.1
ATT 1/*100	1	1	1	1	1	1	1	1	0.1	0.1	0.1	0.1
HFE428	31.25	12.5	6.25	3.125	1.25	6.25	3.125	1.25	6.25	3.125	1.25	0.625
Total(ratio)	31.25	12.5	6.25	3.125	1.25	0.625	0.3125	0.125	0.0625	0.03125	0.0125	0.00625

Analog control voltage

Circuit name	signal level	Signal name
CHx OFFSET	+/-4V	Offset control signal
CHx GAIN	0 to +4V	HFE428 gain control signal
CHx TRIG LVL1	+/-4V	Trigger level control signal
CHx TRIG LVL2	+/-4V	Trigger level control signal for smart trigger/window
CHx HYST	0 to +4V	Trigger hysteresis control signal
INT CAL	0 to +600mV	Signal each CH commonness for calibration

Over load detection

When the input impedance is set to 50 ohm, the over load is detected because of the protection of the terminating resistance.

Over load signal CHx OVLD is produced by detecting temperature of resistance, xR85 for

the load and xR87 for ambient.
It is necessary to measure a standard value when there is no input signal in order to detect the over load accurately.
The over load is detected by monitoring the difference between this standard value and CHX OVLD.

Calibration
The front end executes the calibration of GAIN, BALANCE when the panel setups and the ambient temperature change, so guarantees the accuracy.
Block figure 2 shows the supply of the reference voltage INT CAL.
The calibration executes with INT CAL of standard DC voltage.
The INT CAL is all CH common signal and standard DC voltage of the maximum +/-600mV.
The INT CAL is attenuated to 1/10 in +/-60mV or less.
The CAL OUT signal of DC-1MHz is independent with an internal calibration. The signal can be monitored with an external terminal by switching the internal calibration signal.

Block diagram 2

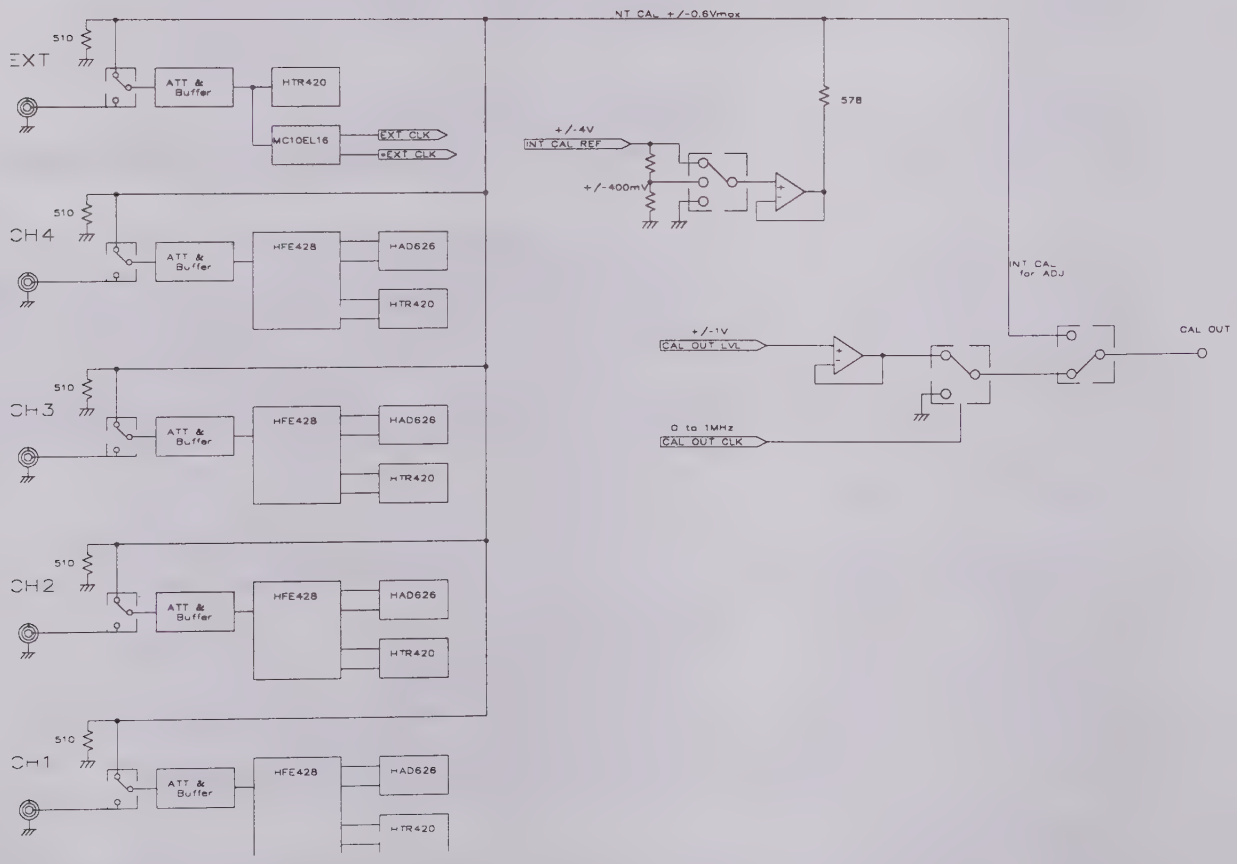

4.2.2 A/D Converter & Memory

Introduction

The analog to digital converter system does the signal conversion to 8bit, using the following circuits:

HAD626

Chip on board MCM (Multi Chip Module).
Hybrid Acquisition Module containing both track & hold amplifier and 8bit ADC.
Differential signal input. (Nominal 500mVpp full scale.)
Differential ECL clock input. (up to 500M S/s.)
Differential ECL compatible data outputs and memory clock.
ECL compatible serial interface for internal ADC gain and offset control.

HMM436

Chip on board MCM.
Hybrid Memory Module containing MAM424.
Maximum buffer length is up to maximum 1Mbytes per channel.
MAM424 (Monolithic Access Memory) captures 8bit data at maximum rate of 500Mbytes/s.
Internal memory consists of a 2Mbit SRAM. (up to 250kbytes per channel.)

HMM436 (LTXXX) : one MAM424 per channel.
HMM436L (LTXXXL): four MAM424's per channel.

Parallel interface for reading data and writing registers.

4.2.3 Trigger

Introduction

The trigger system includes the following circuits:

HTR420

Chip on board MCM.
Hybrid TRigger module designed for a trigger conditioning in DSO.
Differential signal input. (Nominal 500mVpp full scale.)
Dual threshold inputs controlled by DC generator output.
Selectable filtering of input signal. (DC, AC, HF REJ, LF REJ)
Frequency divider by four. (HF)
Dual differential ECL outputs. (Trigger signal and qualifier signal)
Single ended analog output for TV trigger.
Serial interface for the internal settings.

TV trigger

This circuit is able to trigger on different TV line number standards.
TV trigger uses a commercial chip (LM1881).
LM1881 generates composite sync output, vertical sync output and odd/even output.
MST412(Edge qualified function) triggers on video signal using the outputs of LM1881.

LINE trigger

This circuit makes LINE trigger signal from AC line signal of Power Board.
Polarity of line trigger.

MST412

Trigger functions (Standard trigger, Hold off, Pulse width, Interval, State qualified, Edge qualified, Drop out) are made in Monolithic Smart Trigger.
Dual differential ECL inputs. (Trigger signal and qualifier signal)
Differential ECL clock input.
Differential ECL trigger output.
Parallel interface for writing resisters.

400MHz OSC

generates the 400MHz clock for MST412.
ECL single ended output.
The clock frequency of oscillator is adjustable by analog signal from 8bit DAC.
The clock stops for Standard trigger, Hold off by events, TV trigger and LINE trigger.

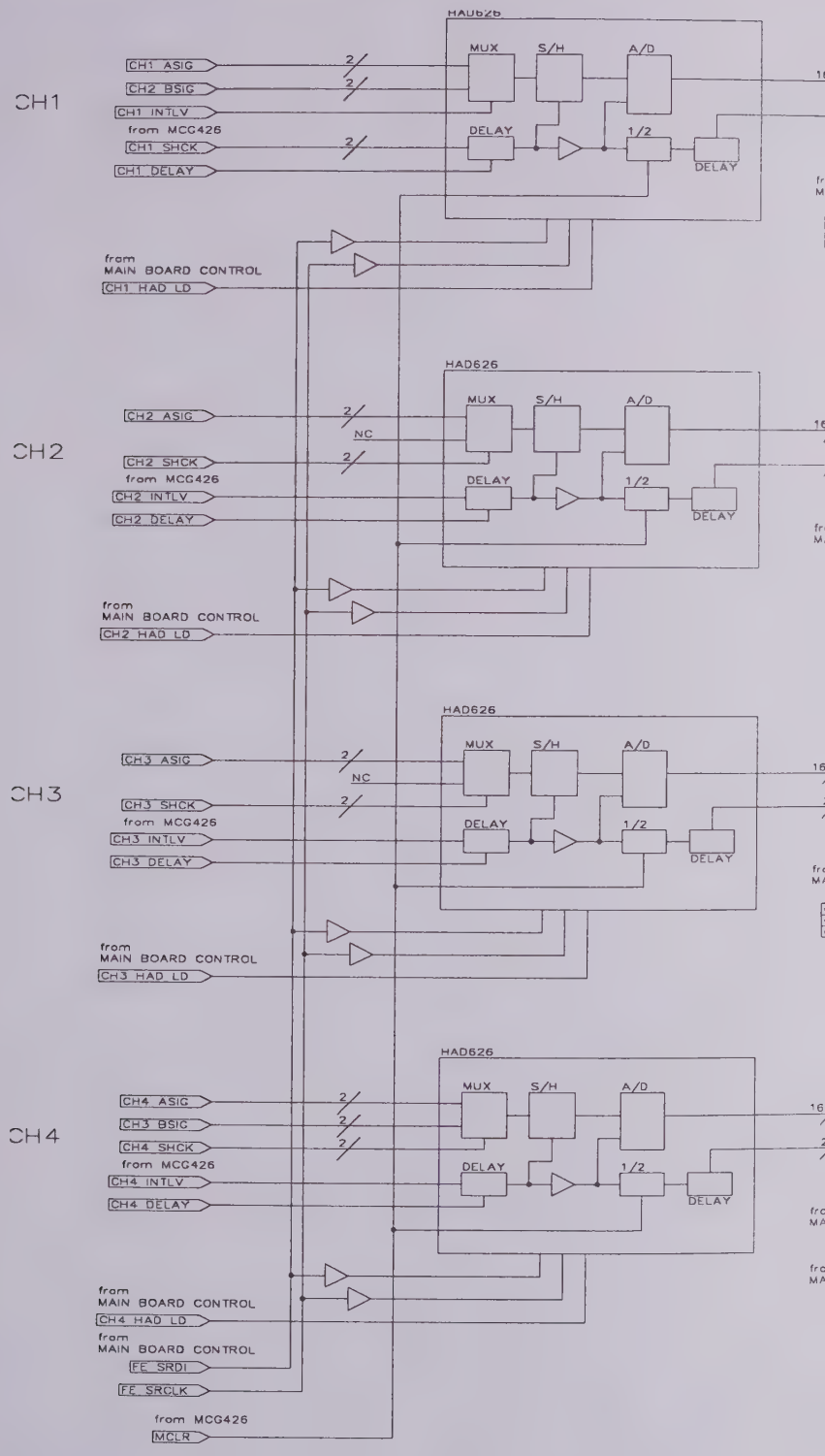

A/D CONVERTER & ME

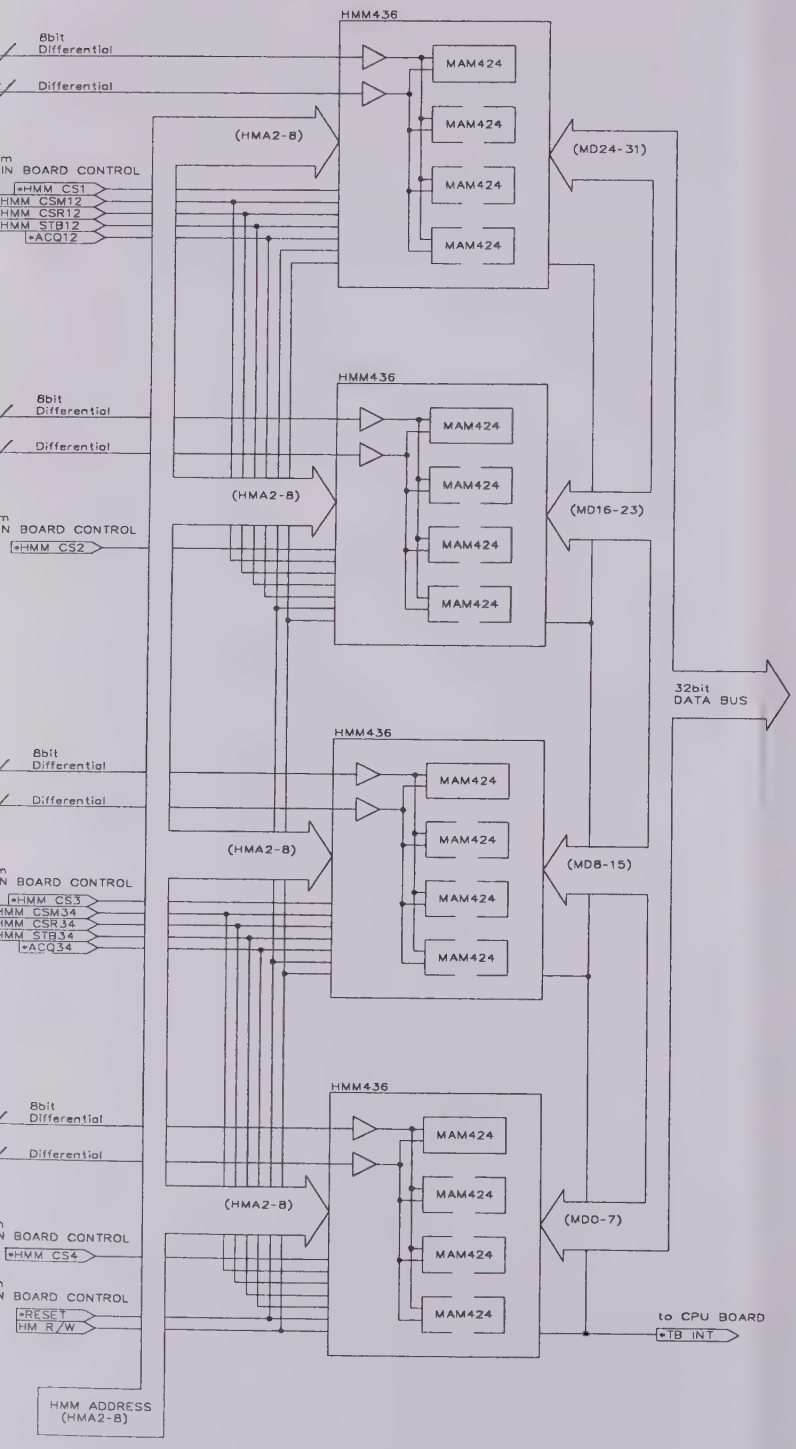

MORY Block Diagram

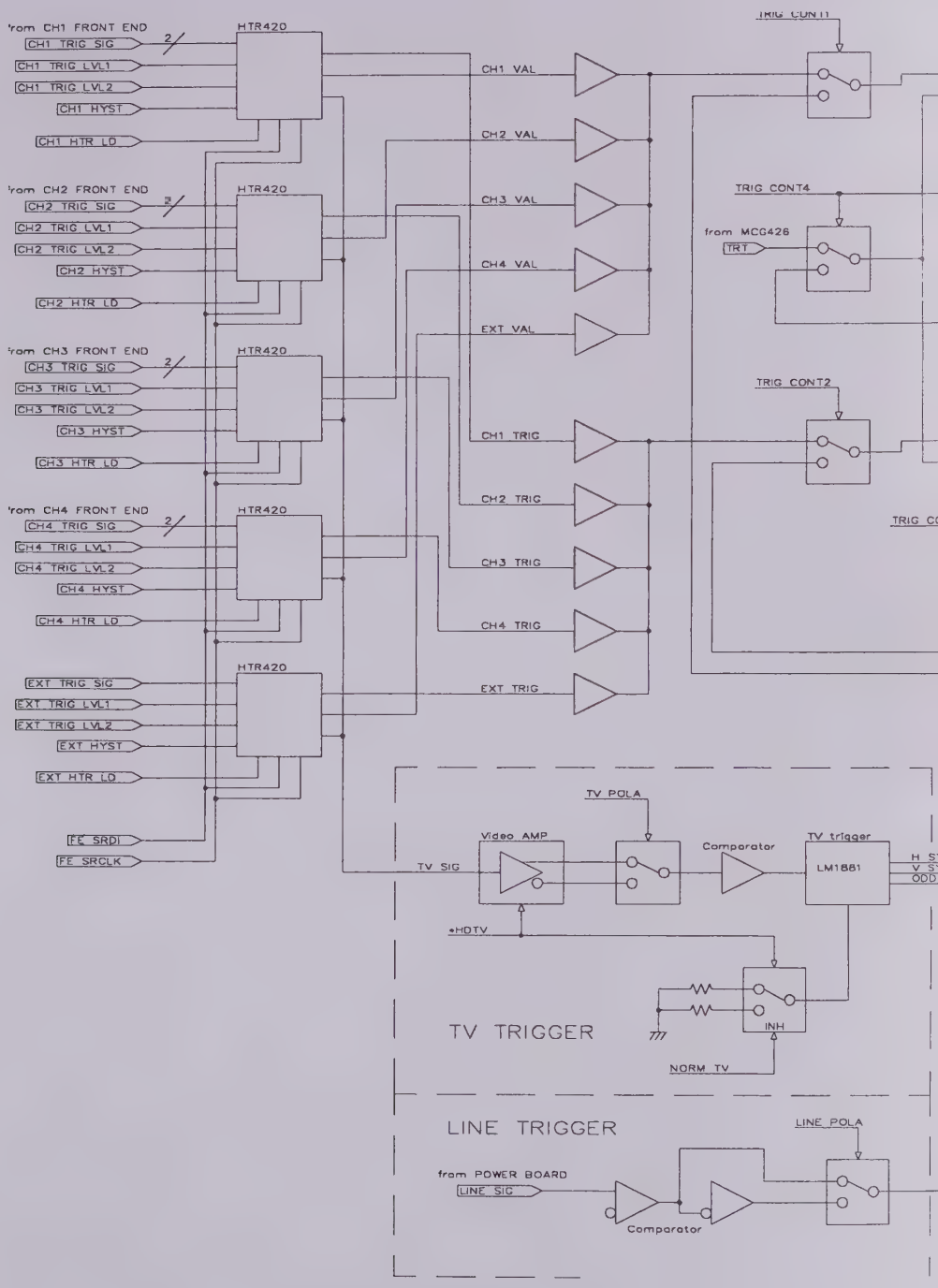
from CH1 FRONT END
CH1 TRIG SIG
CH1 TRIG LVL1
CH1 TRIG LVL2
CH1 HYST
CH1 HTR LD
from CH2 FRONT END
CH2 TRIG SIG
CH2 TRIG LVL1
CH2 TRIG LVL2
CH2 HYST
CH2 HTR LD
from CH3 FRONT END
CH3 TRIG SIG
CH3 TRIG LVL1
CH3 TRIG LVL2
CH3 HYST
CH3 HTR LD
from CH4 FRONT END
CH4 TRIG SIG
CH4 TRIG LVL1
CH4 TRIG LVL2
CH4 HYST
CH4 HTR LD
EXT TRIG SIG
EXT TRIG LVL1
EXT TRIG LVL2
EXT HYST
EXT HTR LD
FE SRDI
FE SRCLK
HTR420
HTR420
HTR420
HTR420
CH1 VAL
CH2 VAL
CH3 VAL
CH4 VAL
EXT VAL
CH1 TRIG
CH2 TRIG
CH3 TRIG
CH4 TRIG
EXT TRIG
TRIG CONT1
TRIG CONT4
from MCG426
TRT
TRIG CONT2
TV POLA
Video AMP
TV SIG
Comparator
TV trigger
LM1881
•HDTV
INH
TV TRIGGER
NORM TV
LINE TRIGGER
LINE POLA
from POWER BOARD
LINE SIG
Comparator

TRIGGER

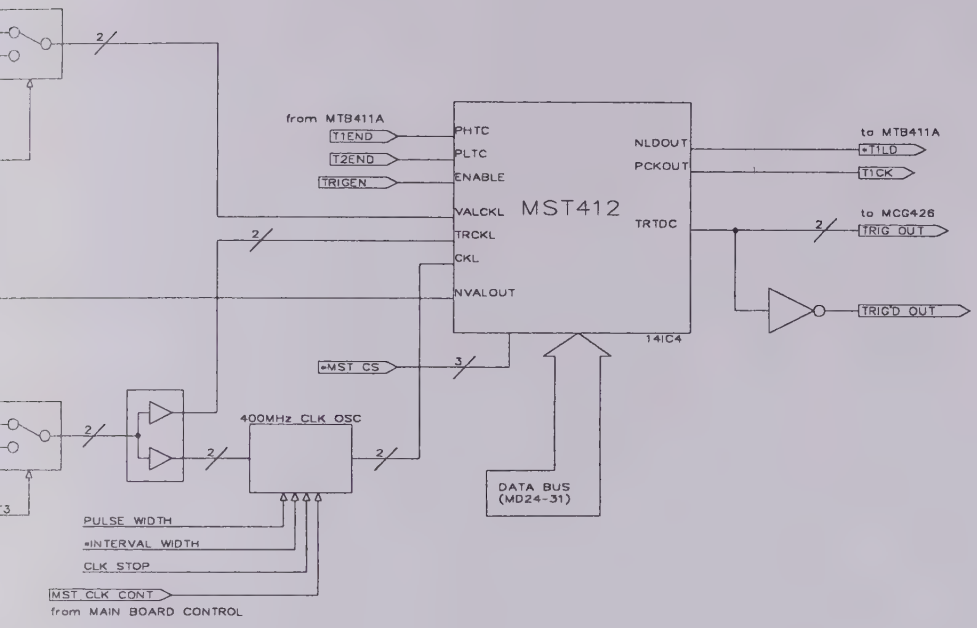

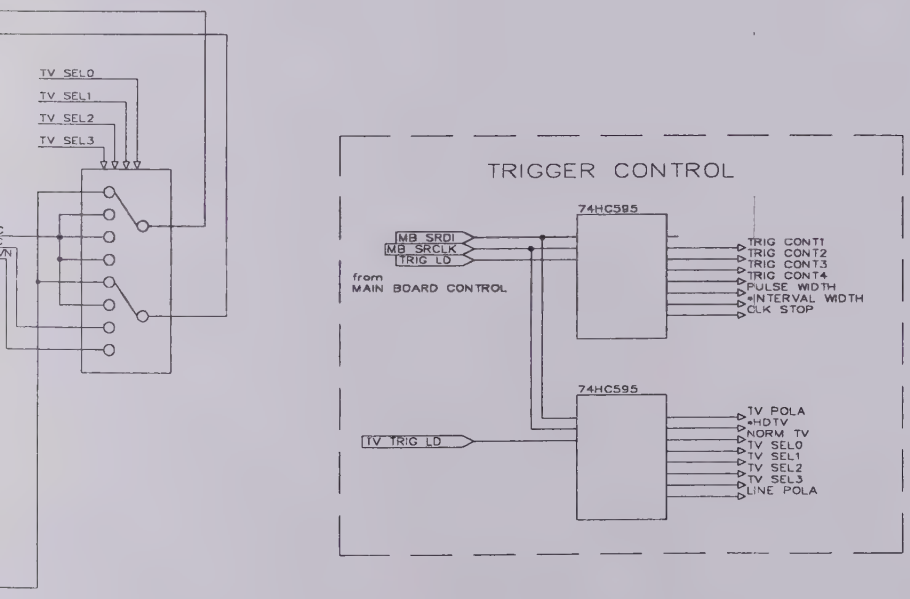

Block Diagram

4.2.4 Timebase

Introduction

The timebase system includes the following three circuits:

MTB411A

Monolithic Time Base has five main sections:
TIMEBASE comprises five counters and associated logic circuitry for the timebase system.
TDC consists of two counters for interpolated and real computation.
TRIGGER is made up of two counters to be used by trigger circuitry.
FREQUENCY is made up of one counter to be used by the main oscillator circuitry.
DIVIDER consists of a bunch of dividers with multiplexer for probe calibration pulse.
Parallel interface for reading data and writing resistor.

MCG426

Monolithic Clock Generator.
generates sampling clock for sample & hold up to 500MHz (2GHz).
generates different clocks for MTB411A.
generates MCLR (Master CLeaR) to reset clock divider of HAD626.
generates RAMPST (RAMP STart) signal for Time to Digital Converter.
generates TRT (Test Real Time clock) signal to calibrate 400MHz clock for MST412.
implements divider and phase detector of a PLL to generate clock system at 2GHz.
Parallel interface for reading data and writing resister.

Time to Digital Converter

measures the time (0 to 2ns) between the trigger and sampling clock using MTB411A.
The circuit magnifies the time by nominal two thousand times.
The magnifying power is adjustable by analog signal from 8bit DAC.
The magnified time is counted by MTB411A using 100MHz clock.

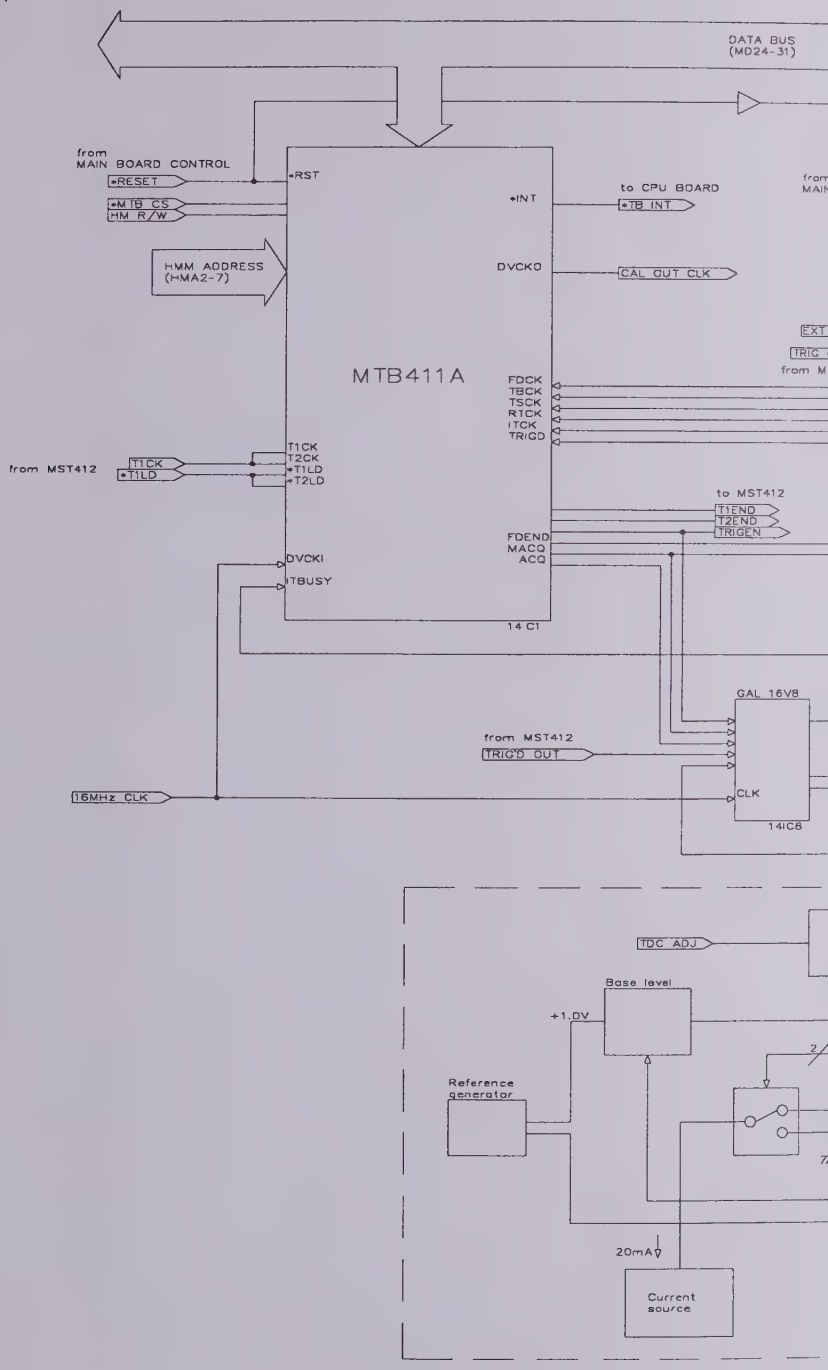
DATA BUS
(MD24-31)
from
MAIN BOARD CONTROL
•RESET
•MTB CS
HM R/W
•RST
HMM ADDRESS
(HMA2-7)
MTB411A
•INT
to CPU BOARD
•TB INT
DVCKO
CAL OUT CLK
FDCK
TBCK
TSCK
RTCK
ITCK
TRIGD
from MST412
T1CK
•T1LD
T1CK
T2CK
•T1LD
•T2LD
to MST412
T1END
T2END
TRIGEN
FDEND
MACQ
ACQ
DVCKI
•TBUSY
14 C1
GAL 16V8
from MST412
TRIG'D OUT
16MHz CLK
CLK
14IC8
TDC ADJ
Base level
+1.0V
Reference
generator
20mA
Current
source

TIMEBASE Bl

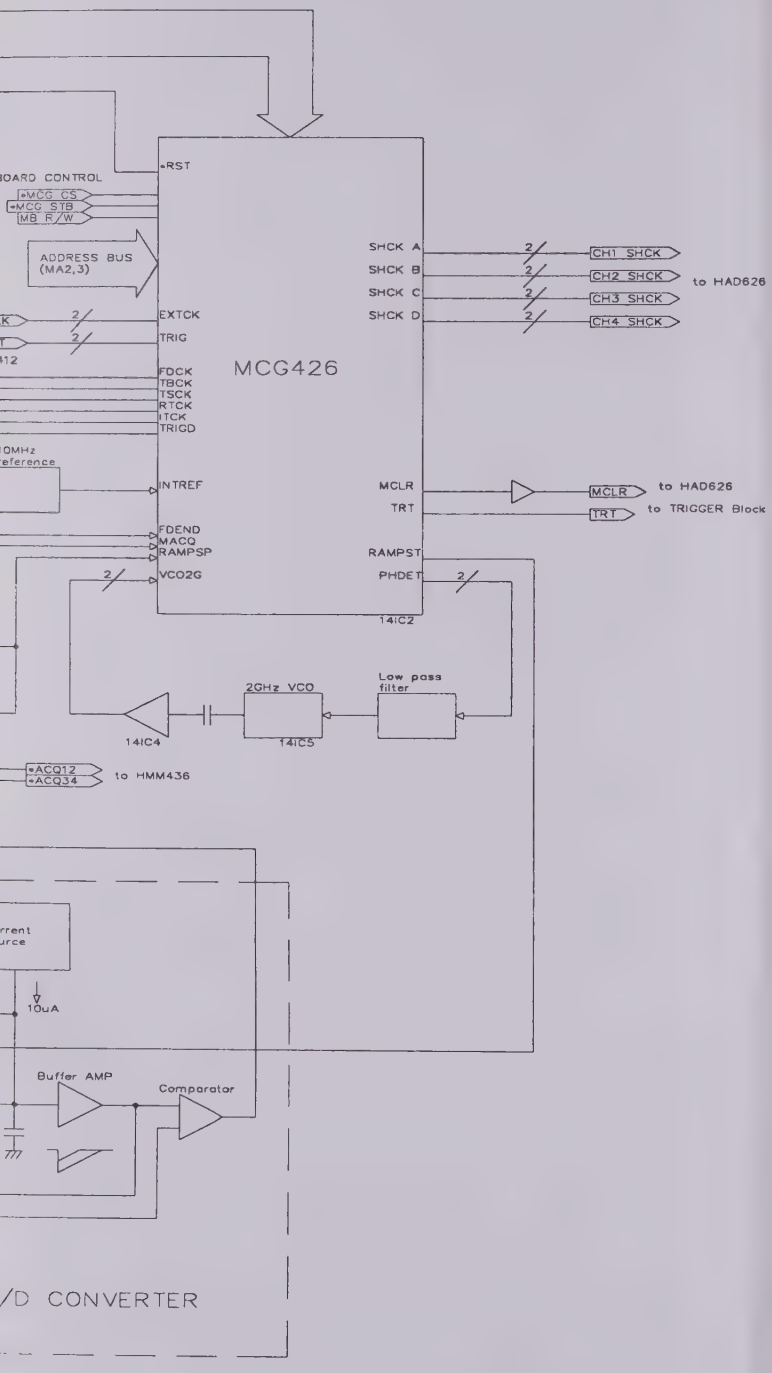
BOARD CONTROL
*RST
*MCG CS
*MCG STB
MB R/W
ADDRESS BUS (MA2,3)
EXTCK
TRIG
FDCK
TBCK
TSCK
RTCK
ITCK
TRIGD
MCG426
INTREF
FDEND
MACQ
RAMPSP
VCO2G
SHCK A
SHCK B
SHCK C
SHCK D
CH1 SHCK
CH2 SHCK
CH3 SHCK
CH4 SHCK
to HAD626
MCLR
TRT
to TRIGGER Block
RAMPST
PHDET
14IC2
2GHz VCO
Low pass filter
14IC4
14IC5
*ACQ12
*ACQ34
to HMM436
10uA
Buffer AMP
Comparator
/D CONVERTER

ck Diagram

4.2.4 Timebase

Introduction

The timebase system includes the following three circuits:

MTB411A

Monolithic Time Base has five main sections:
TIMEBASE comprises five counters and associated logic circuitry for the timebase system.
TDC consists of two counters for interpolated and real computation.
TRIGGER is made up of two counters to be used by trigger circuitry.
FREQUENCY is made up of one counter to be used by the main oscillator circuitry.
DIVIDER consists of a bunch of dividers with multiplexer for probe calibration pulse.
Parallel interface for reading data and writing resistor.

MCG426

Monolithic Clock Generator.
generates sampling clock for sample & hold up to 500MHz (2GHz).
generates different clocks for MTB411A.
generates MCLR (Master CLeaR) to reset clock divider of HAD626.
generates RAMPST (RAMP STart) signal for Time to Digital Converter.
generates TRT (Test Real Time clock) signal to calibrate 400MHz clock for MST412.
implements divider and phase detector of a PLL to generate clock system at 2GHz.
Parallel interface for reading data and writing resister.

Time to Digital Converter

measures the time (0 to 2ns) between the trigger and sampling clock using MTB411A.
The circuit magnifies the time by nominal two thousand times.
The magnifying power is adjustable by analog signal from 8bit DAC.
The magnified time is counted by MTB411A using 100MHz clock.

HMM436 control
generates special signals for access to HMM436.
generates clock signals for following components:
MTB411A (16MHz)
IIC BUS chip (8MHz)
8bit microprocessor of DC Generator (4MHz)

MCG426 control
generates special signals for access to MCG426.
generates *ATTenuator ENable signal to protect 50ohm input during power-up.

MST412 control
generates special signals for writing commands to MST412.

Serial I/F control
generates the following serial interface signals.
MB SRDI : serial data signal for components except Front End, HAD626 and HTR420.
MB SRCLK : serial clock signal for components except Front End, HAD626 and HTR420.
DCG SRCLK : serial clock signal for 8bit microprocessor of DC generator.
FE SRDI : serial data signal for Front End, HAD626 and HTR420.
FE SRCLK : serial clock signal for Front End, HAD626 and HTR420.
XXXX LD : load signal for serial interface components.

IIC-BUS control
controls Pro-Bus system via serial IIC-bus.
uses a commercial chip (PCF8584).
PCF8584 serves as an interface between parallel bus and the serial IIC-bus.

Thermometer
measures temperature of Main Board.
Acquired data are used to determine condition of internal calibration.

EEPROM
4kbit EEPROM.
stores main board calibration data.

8bit D/A Converter
generates analog signal to control trigger hysteresis, TDC gain, clock frequency for MST412,
and DAC adjustment of DC generator.
uses a commercial chip (MB88346).
MB88346 is 8bit 12channels DAC with output buffers.
Analog signal outputs are 0 to +4.0V full scale.

Main Board Data Read
reads Main Board data for a communication between Main Board and CPU Board.

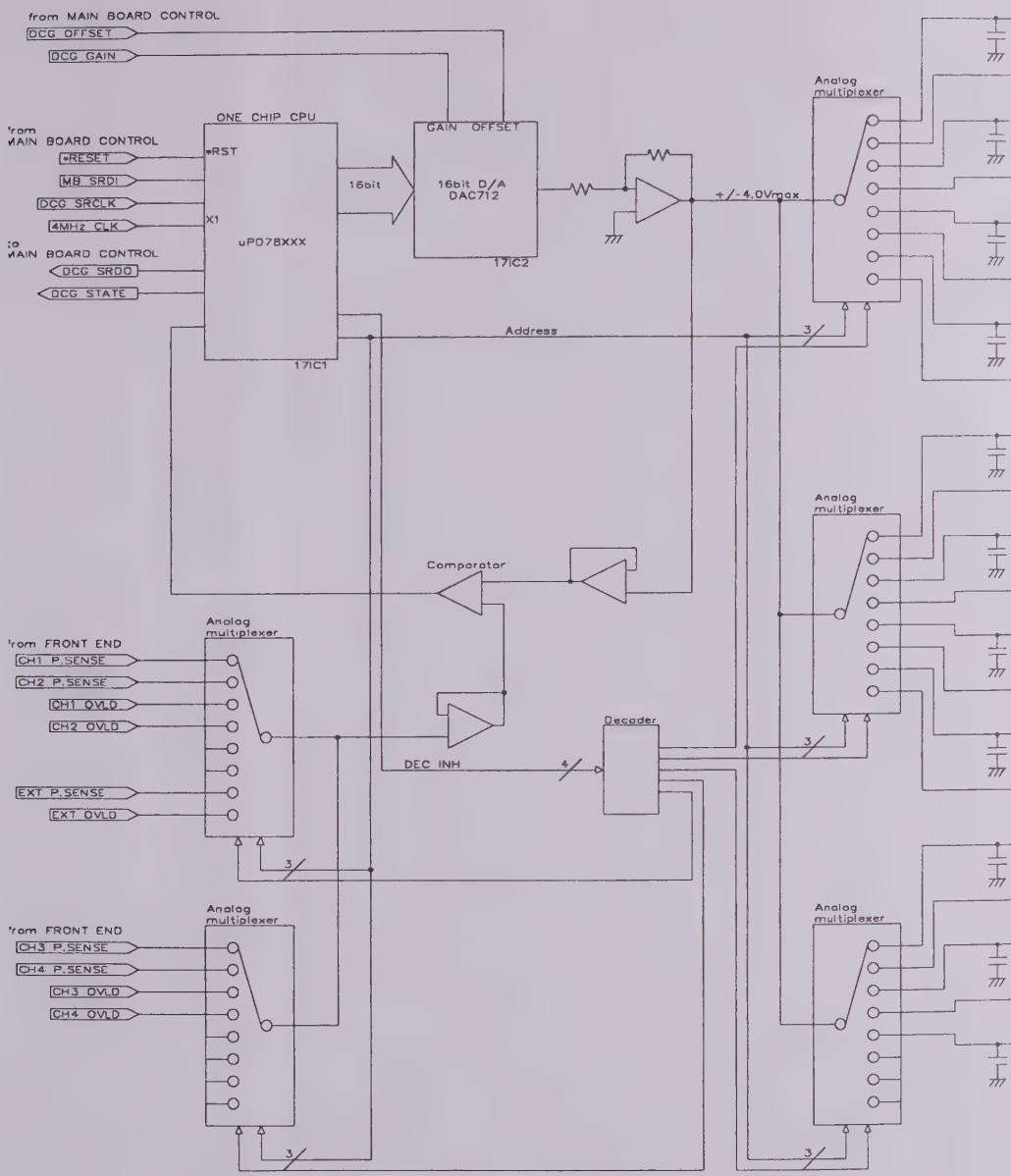

DC GENERATOR

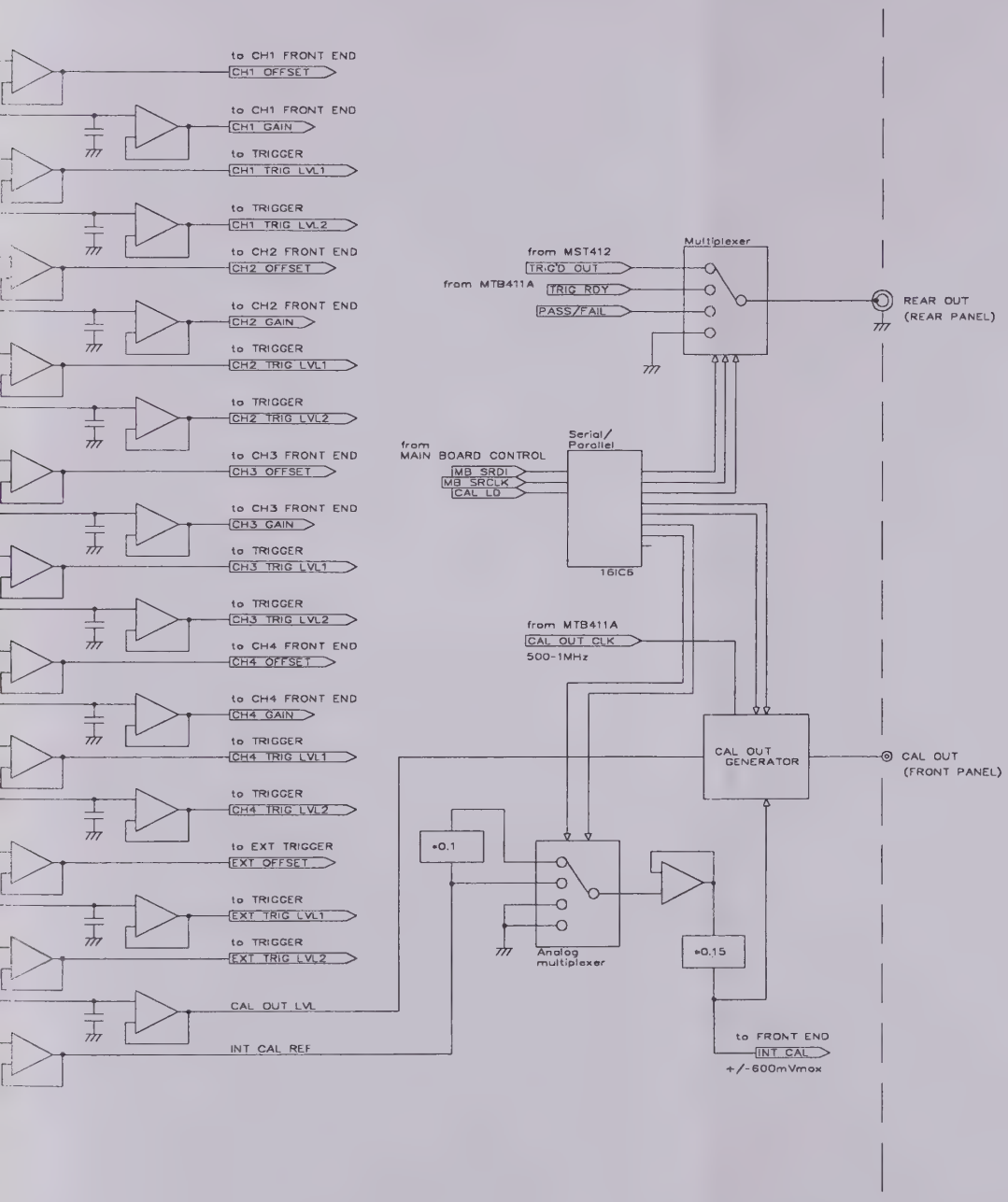

Block Diagram

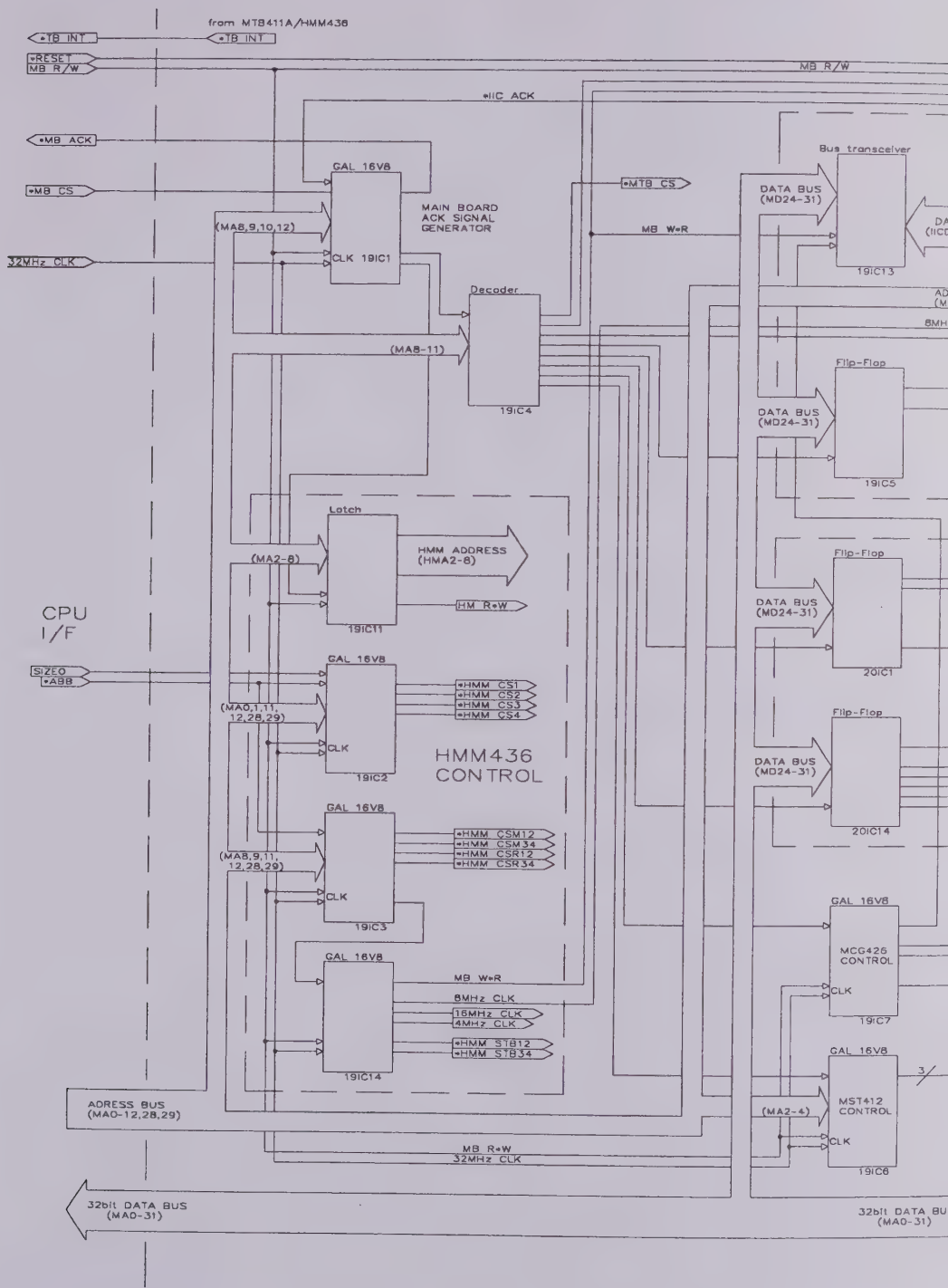

MAIN BOARD CO

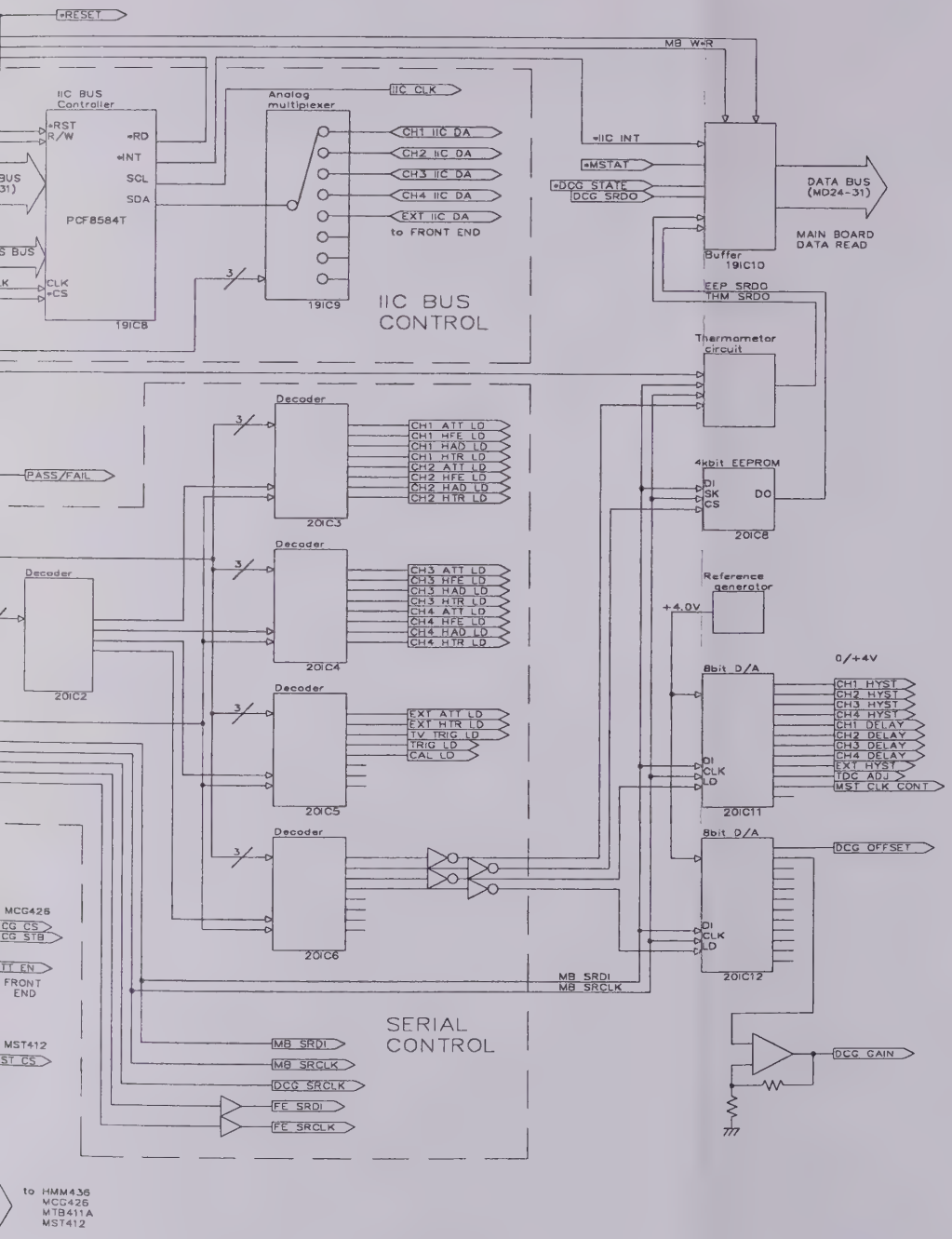

NTROL Block Diagram

4.3 OUTLINE OF WAVERUNNER POWER SUPPLY

Input voltages :Wide ranges of inputs, 90~132 V AC and 180~250 V AC (45~66 Hz) are allowed.

Output voltages: 9 different DC voltages available.

+5 V (DIG)
+12 V (DIG)
+12 V (FAN)
+24 V (PRINTER)
-4.5 V (DIG)
+5 V (ANA)
+12 V (ANA)
- 5 V (ANA)
-12 V (ANA)

This power unit consists of, roughly divided, five independent switching power supplies and two other circuits.

1. Input circuit (noise filters and rectifiers are included)
2. Harmonic-current correction power supply
   By employing a step-up converter system, the input current waveform is controlled to be similar to the waveform of input voltage. The control unit is a PFC unit made with IC1. The output voltage is regulated to +377 V DC.
3. Auxiliary power supply (to feed the power for the Harmonic-current control power supply in the above 2).
   Uses an RCC type converter, and outputs +20 V DC.
4. Main power supply-A
   Uses a flyback converter, and outputs -4.5 V DC (DIG), ±5 V DC (ANA), and ±12 V DC (ANA) respectively. The output of -4.5 V DC is regulated, but the other outputs are not regulated and may fluctuate a little in the voltages depending on the load conditions.
5. Main power supply-B
   Uses a flyback converter, and outputs are +5 V DC (DIG), +12 V DC (DIG), and +24 V DC (DIG), respectively. The outputs of +5 V DC and +12 V DC are regulated, but the output of +24 V DC may largely fluctuate according to the load conditions.
6. Auxiliary power supply (to feed the power for both Main power supplies- A and -B).
   Uses an RCC converter, and outputs are +22 V DC and +27 V DC.
7. Series regulator.
   Stabilizes the outputs of the main power source of ±5 V DC (ANA), ±12 V DC (ANA), and reduces the level of ripple noises.

The power switch is located on the secondary side (not the primary side) in order to switch-on and -off of the outputs at the secondary side; the whole control is made by switching on and off of the current control oscillator which is configured with the IC 2 and IC6. Although the power switch is placed to its off position, therefore, the power is being fed to all the components in the power supply units (stand-by mode), as long as the waverunner supply is connected to the AC outlet.

The above switching-on and -off function is actually made by shorting and opening of pins 6 and 7 of "CN3" in the power unit.

Since the design of this waverunner power supply is made based on the use of forced air cooling with the fan-motors, operating the power supply for long hours by removing the upper and bottom covers would cause tripping of the overheat protection circuit because of a temperature rise in the unit, and result in the cease of power output.

The DC outputs are all guarded by the overload-current protection circuits; therefore, output short circuiting will not cause any damage to the equipment even it takes place. However, when the short-circuited state continues for long hours, the power output switch may cause open due to a possible temperature rise in several circuits, causing the excess-current protecting circuit to activate.

Releasing of the overheat protection circuit from its activated mode must not be made within the time less than five seconds by disconnecting the AC inlet plug out of the AC receptacle.

Do not touch any electric parts inside the power supplies during operation as the primary side of the power unit has many portions of over 500 Vrms of magnitudes to grounding.

< Operation of the parts inside the Waverunner Power Supply>

 # Circuit No. 1 / 7

The fuse, F1, heat-breaks to shut down the input when an abnormal excess-current keeps running through the input circuit. Replacing of the fuse must be made after locating the problem area and fixing failure parts (including damages).

The coils, L2, L3, L4, and L5, and capacitors, C1, C2, C3, C4, C5, C6, C94, and C105, configure the circuits of noise filters to the AC power lines.

The resistor, R2, which contains a thermo-fuse, is to limit the in-rush current when it flows into the input circuit. In case an abnormal input current keeps flowing, even when the power switch(through switching operation) is placed to off, the thermo-fuse melts down and disconnects the input circuit.

When the switching power supplies operate normally, the TRIAC, D2, turns on to bypass the R2 current, to reduce R2's electric losses during the operation.

The diode, D4, is a bridge circuit and is used for direct full wave rectification of the AC input.

 # Circuit No. 2 / 7

The IC1 in the PFC unit receives its operating power from the auxiliary power supply which consists of the transistor Q2 and transformer T1, etc; outputs the driving signals (Gate Signals) for the transistor Q1, and operates the Harmonic control power supply which consists of the choking coil L6, diode D5, capacitors C13, etc., to obtain the output of +377 V DC.

The variable resistor, R16, is to adjust the output voltage of +377 V DC in the Harmonic control power source.

#Circuit No. 3 / 7
The variable resistor, R117, is to adjust the output voltage of -4.5 V DC.

 # Circuit No. 4 / 7
The outputs of ±5 V DC (ANA) and ±12 V DC (ANA) use the series regulator, consisting of the transistors Q10 to Q18 and IC9, which stabilizes the output voltage and reduces the ripple voltages. Also, the series regulator performs the remote sensing function (by using No. 2 to No. 5 pins of Connector CN3) in order to keep the voltage of the main-board on the load side constant.

The variable resistor, R152, is for controlling the DC output voltages of ±5 V (ANA) and ±12 V (ANA). The DC output voltages of ±5 V (ANA) and ±12 V (ANA) are the tracking outputs (voltages of 4 outputs vary with each other).

 # Circuit No. 5 / 7
The variable resistor, R73, is used to adjust the regulated output voltage of +5 V DC (DIG).

#Circuit No. 6 / 7
The posistor, R 33, shows high resistance property when its temperature increases over 90°C (due to the temperature rises in Q10 or Q12), and stops IC2 and IC6 oscillations, causing disconnection of the voltage output circuits (through activation of the overheat protection circuit). Releasing of the overheat protection circuit from its activated mode must be made by confirming the heat-sink temperature of the protection circuit to be cooled under 80°C, by leaving the unit more than five seconds while the AC inlet plug out of the AC receptacle is disconnected.

The posistor, R160, becomes high resistance when its temperature increases over 80°C (due to the temperature rises in Q14 or Q16), and stops IC2 and IC6 oscillations, causing disconnection of the voltage output circuits (through activation of the overheat protection circuit). Releasing of the overheat protection circuit from its activated mode must be made by confirming the heat-sink temperature of the protection circuit to be cooled under 70°C, by leaving the unit more than five seconds while the AC inlet plug out of the AC receptacle is disconnected.

The posistor, R166, becomes high resistance when the temperature of R 166 increases over 110°C due to the temperature rise in Q1, and stops IC2 and IC6 oscillations which cause disconnection of the voltage output circuits (through activation of the overheat protection circuit). Releasing of the overheat protection circuit from its activated mode must be made by confirming the heat-sink temperature of the protection circuit to be cooled under 100°C, by leaving the unit more than five seconds while the AC inlet plug out of the AC receptacle is disconnected.

 # Circuit No. 7 / 7

The IC2 in the circuit of the switching power control ICs receives the power which is fed by the auxiliary power supply (circuit No.6/7) consisting of the transistor Q4 and the transformer T2, to output the driving signals (Gate signals) for the transistor Q6 (circuit No.5/7); and drives the Main power supply-A (circuit No.5/7) consisting of the transformer T3 and others. The Main power supply-A generates the output voltages of +5 V DC (for DIG Circuit), +12 V DC (for DIG Circuit and Fan), and +24 V DC (for Printer), respectively.

The IC6 in the circuit of the switching power control ICs receives the power which is fed by the auxiliary power supply (circuit No.6/7) consisting of the transistor Q4 and the transformer T2, to output the driving signals (Gate signals) for the transistor Q8 (circuit No.3/7); and drives the Main power supply-B (circuit No.3/7) consisting of the transformer T4 and others. The Main power supply-B generates the output voltages of ±5 V DC (for ANA circuit), ±12 V DC (for ANA circuit), and -4.5V DC (for DIG circuit).

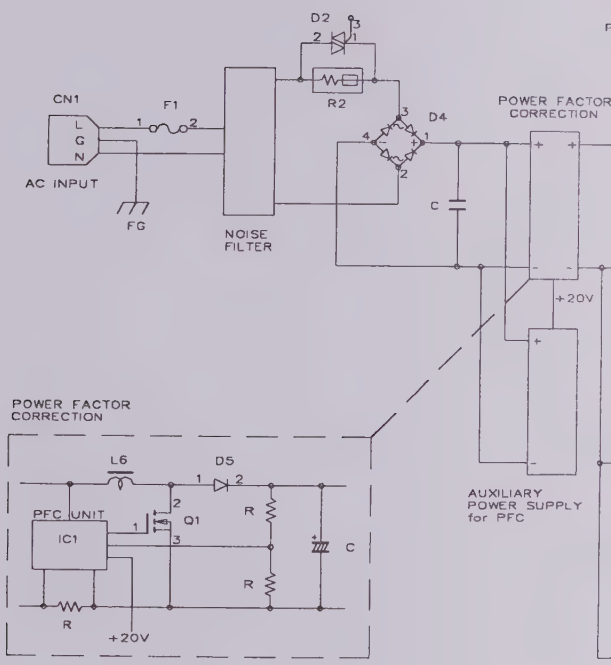

BLOCK DIAGRA

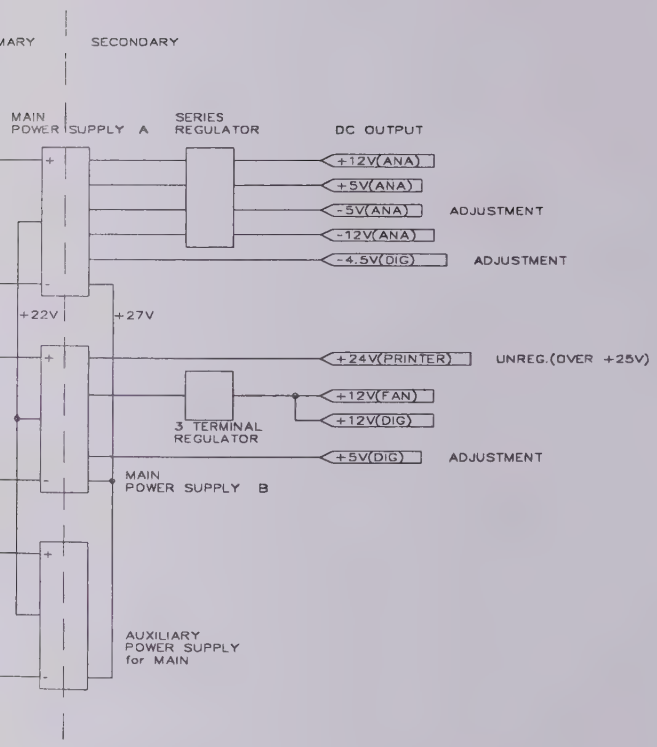

of FND POWER SUPPLY

5. Performance Verification

5.1 Introduction

This chapter contains procedures suitable for determining if the LT Series Digital Storage Oscilloscope performs correctly and as warranted.
They check all the characteristics listed in subsection 5.1.1.

Because they require time and suitable test equipment, you may not need to perform all of these procedures, depending on what you want to accomplish.

In the absence of the computer automated calibration system based on LeCroy Calibration Software (LeCalsoft), this manual performance verification procedure can be followed to establish a traceable calibration.
It is the calibrating entities' responsibility to ensure that all laboratory standards used to perform this procedure are operating within their specifications and traceable to required standards if a traceable calibration certificate is to be issued for the LT Series Digital Storage Oscilloscope.

5.1.1 List of Tested Characteristics

This subsection lists the characteristics that are tested in terms of quantifiable performance limits.

- Input Impedance
- Leakage Current
- Noise
- DC Gain Accuracy
- Offset Accuracy
- Bandwidth
- Trigger Level
- Smart Trigger
- Time Base Accuracy
- Overshoot and Rise Time
- Overload

5.1.2 Calibration Cycle

The LT Series Digital Storage Oscilloscope requires periodic verification of performance. Under normal use (2,000 hours of use per year) and environmental conditions, this instrument should be calibrated once a year.

5.2 Test Equipment Required

These procedures use external, traceable signal generators, DC precision power supply, step generator and digital multimeter, to directly check specifications.

Instrument	Specifications	Recommended
Signal Generator Radio Frequency	Frequency : .5 MHz to 2 GHz Frequency Accuracy : 1 PPM	HP8648B or equivalent
Signal Generator Audio Frequency	Frequency : 0 to 5 kHz Amplitude : 8 V peak to peak	LeCroy LW420 or HP33120A or equivalent
Voltage Generator DC Power Supply	Range of 0 to 20 V, in steps of no more than 15 mV	HP6633A or equivalent
Step Generator Fast Pulser	Rise time 350ps ± 100 ps Overshoot 3.5 % ± 1 %	LeCroy 4969A + PB049 or equivalent
Power Meter + Sensor	Accuracy ±1 %	HP437B + 8482A or equivalent
Digital Multimeter Volt & Ohm	Voltmeter Accuracy : 0.1 % Ohmmeter Accuracy : 0.1 %	Keithley 2000 or equivalent
Adapter	50Ω to 1MΩ	LeCroy 4962-9
Coaxial Cable, 1 ns	50Ω, BNC, length 20 cm,	LeCroy 480232001
Coaxial Cable, 5 ns	50Ω, BNC, length 100 cm,	LeCroy 480020101
2 Attenuators, 20 dB	50Ω, BNC, 1 % accuracy	LeCroy 402200402
Attenuator, 6 dB	50Ω, BNC, 1 % accuracy	LeCroy 402600403
Terminator, 2 W	50Ω, BNC, Feed-Through	LeCroy 402323001
T adapter	50Ω, BNC T adapter	LeCroy 402222002

Table 5-1 : Test Equipment

5.2.1 Test Records

The last pages of this document contain LT Series test records in the format tables. Keep them as masters and use a photocopy for each calibration.

5.3 Turn On

If you are not familiar with operating the LT Series, read the operator's manual.

- Switch on the power using the power switch.
- Wait for about 20 minutes for the scope to reach a stable operating temperature, and verify

5.3.1 PNL Files

- Use PNL Files depend on the LT344,LT342,LT322,LT224.

- The LTxxx shows one of the LT344,LT342,LT322,LT224.

5.4 Input Impedance

The impedance values for 50Ω and 1MΩ couplings are measured with a high precision digital multimeter. The DMM is connected to the DSO in 4 wire configuration (input and sense), allowing for accurate measurements.

Specifications & Test limits

DC 1.00 MΩ ±1 %
AC 1.20 MΩ ±1 % (2mV/div to 99mV/div)
1.00 MΩ ±1 % (100mV/div to 10V/div)
DC 50Ω ±1 %

5.4.1 Channel Input Impedance

a. DC 1MΩ

- Recall **LTxxxP001.PNL** or configure the DSO :

Panel Setups	:	**Recall FROM DEFAULT SETUP**
Channels Trace OFF		**Channel 1, Channel 2, Channel 3 & Channel 4**
Input Coupling	:	**DC 1MΩ** on all 4 Channels
Input gain	:	**50 mV/div.** on all 4 Channels
Time base	:	**50 nsec/div.**
Trigger mode	:	**Auto**

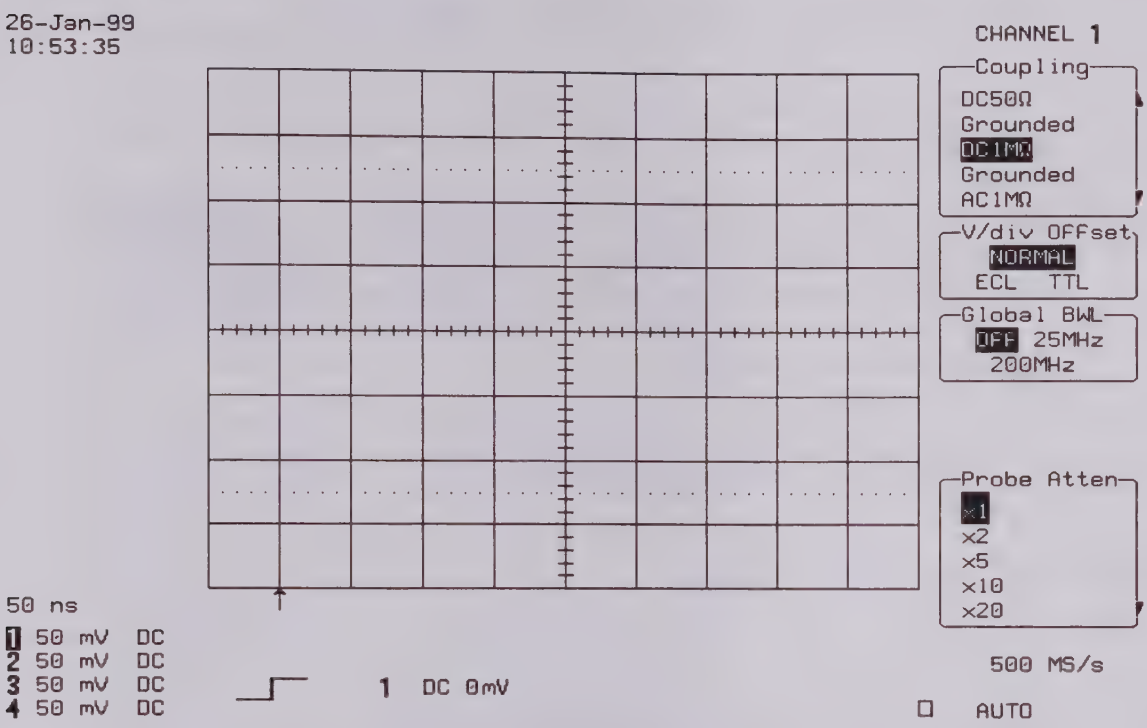

- Set the DMM with **Ohms and Ohms sense** to provide a 4 wire measurement.
- Connect it to Channel 1.
- Measure the **input impedance**. Record it in Table 2, and compare it to the limits.
- Repeat the above test for all input channels.
- Recall **LTxxxP002.PNL** or Set Input gain to **200 mV/div.** on all 4 Channels
- Repeat the test for all input channels.
- Record the measurements in Table 2, and compare the test results to the limits in the test record.

b. AC 1MΩ

- Recall **LTxxxP003.PNL** or configure the DSO as shown in 5.4.1.a, and for each Channel make the following change :

  Input Coupling : **AC 1MΩ**

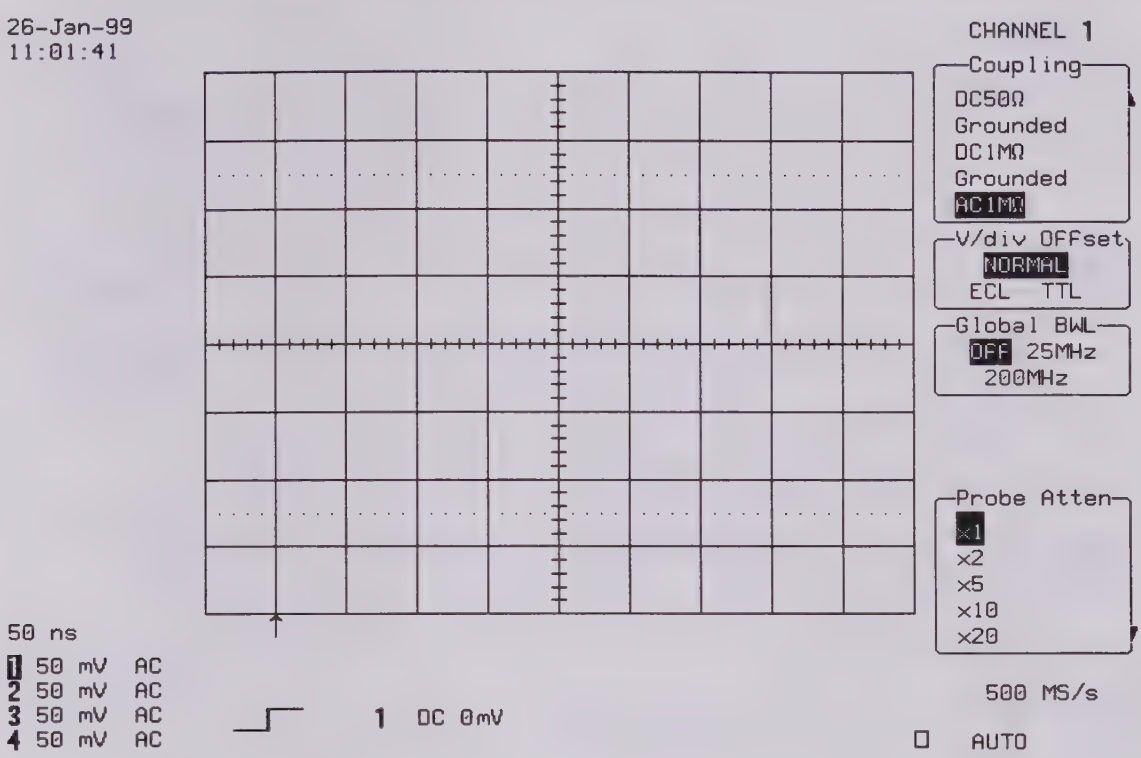

- For all input channels measure the **input impedance**.
- Record the input impedance in Table 2, and compare it to the limits.
- Recall **LTxxxP004.PNL** or Set Input gain to **200 mV/div** on all 4 Channels.
- Repeat the test for all input channels.
- Record the measurements in Table 2, and compare the results to the limits in the test record.

c. DC 50Ω

- Recall **LTxxxP005.PNL** or configure the DSO as shown in 5.4.1.a, and for each Channel make the following change:

  Input Coupling : **DC 50Ω**

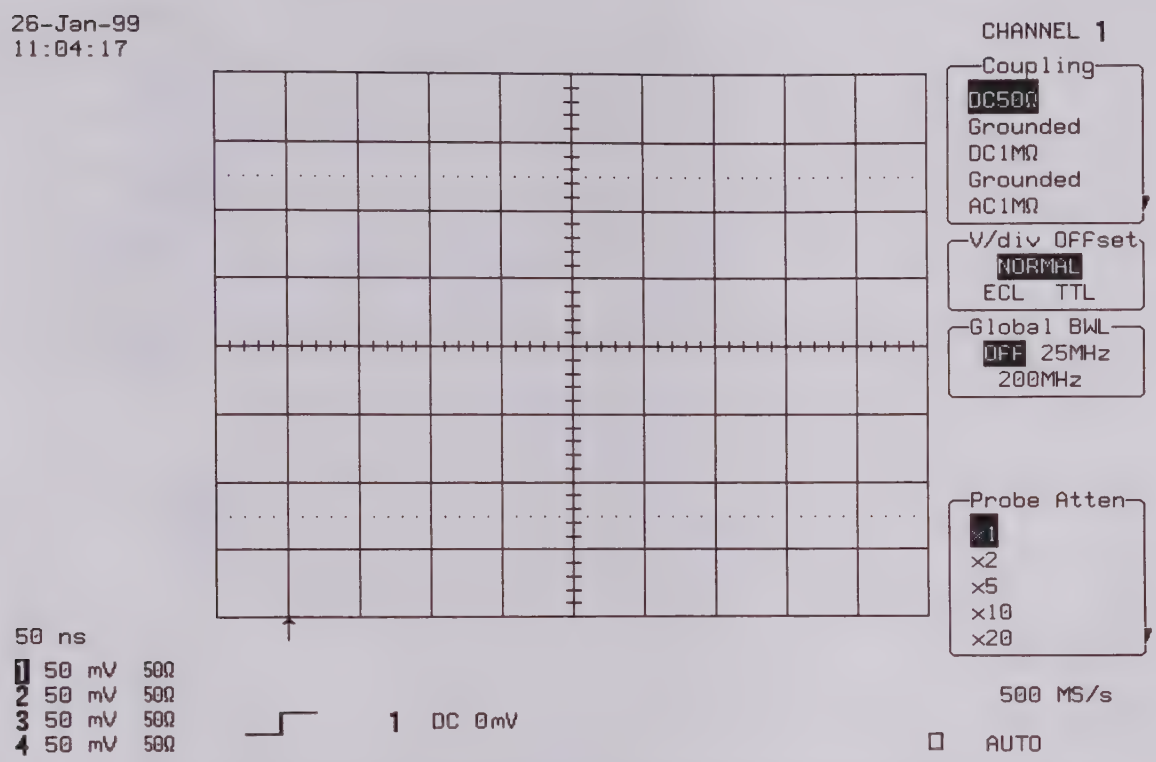

- For all input Channels, measure the input impedance.
- Record the **input impedance** in Table 2, and compare it to the limits.
- Recall **LTxxxP006.PNL** or set Input gain to **200 mV/div.** on all 4 Channels
- Repeat the test for all input channels. Record the measurements in Table 2, and compare the results to the limits in the test record.

5.4.2 External Trigger Input Impedance

a. DC 1MΩ

- Recall **LTxxxP007.PNL** or configure the DSO :

Trigger mode	:	**Auto**
Select Setup trigger		
Trigger on	:	**EXT**
Cplg Ext	:	**DC**
External	:	**DC 1MΩ**
Time base	:	**50 nsec/div.**

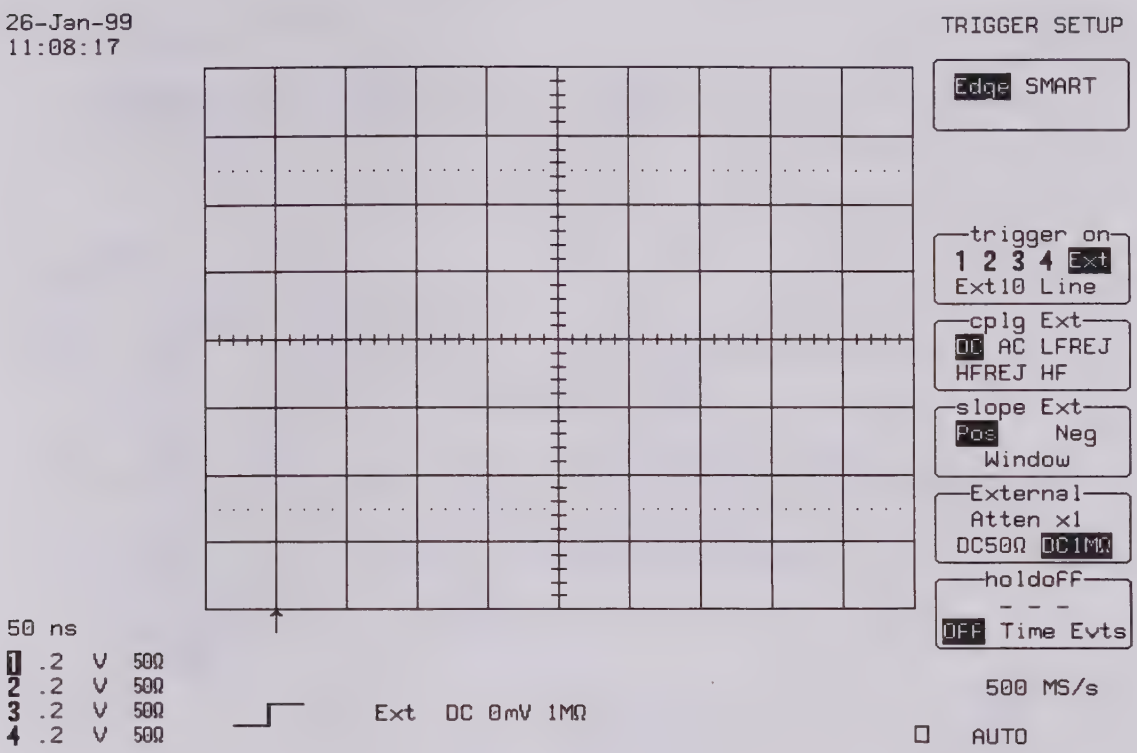

- Connect the DMM to External, and measure the **input impedance**.
- Record the input impedance in Table 2, and compare it to the limits.
- Recall **LTxxxP008.PNL** or set trigger to Ext/10
- Measure the **input impedance**.
- Record the test result in Table 2, and compare the result to the limits in the test record.

b. DC 50Ω

- Recall **LTxxxP009.PNL** or configure the DSO :

  Select Setup trigger

  Trigger on : **EXT**

  External : **DC 50Ω**

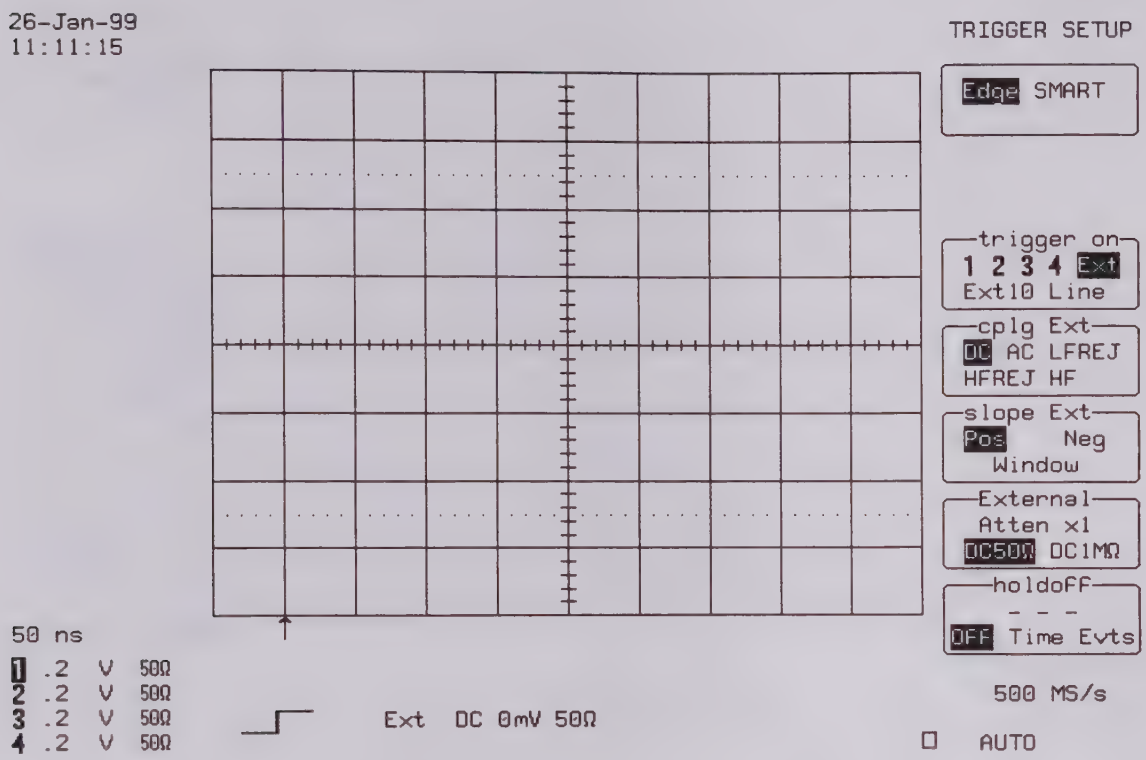

- Connect the DMM to External, and measure the **input impedance**.
- Record the input impedance in Table 2, and compare the result to the limit in the test record.

5.5 Leakage Current

The leakage current is tested by measuring the voltage across the input channel.

Test limit

DC 1MΩ : ±1 mV

5.5.1 Channel Leakage Current

- Recall **LTxxxP010.PNL** or configure the DSO :

Panel Setups	:	**Recall FROM DEFAULT SETUP**
Channels Trace ON		**Channel 1, Channel 2, Channel 3 & Channel 4**
Input Coupling	:	**DC 1MΩ** on all 4 Channels
Input gain	:	**50 mV/div.** on all 4 Channels
Trigger mode	:	**Auto**
Time base	:	**10 µsec/div.**

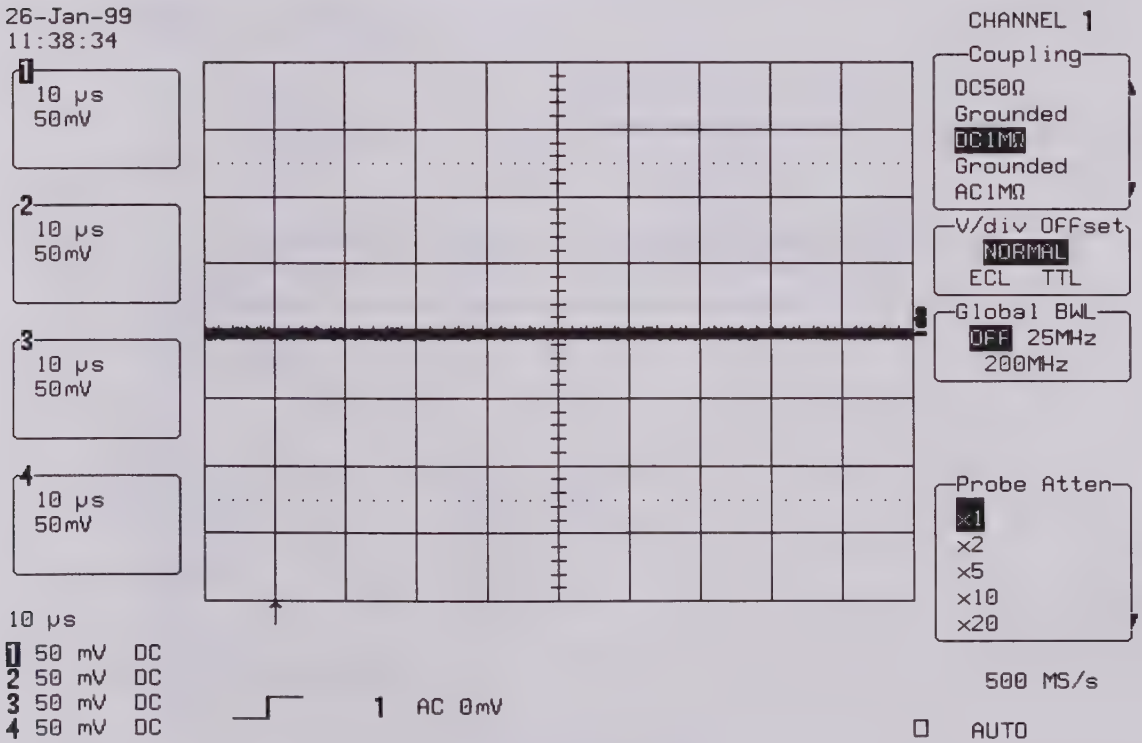

- Set the DMM to measure Volts, and connect it to Channel 1.
- Measure the **voltage** and enter it in Table 3. Compare it to the limits.
- Repeat the test for all input channels.

5.5.2 External Trigger Leakage Current

a. DC 50Ω

- Recall **LTxxxP011.PNL** or configure the DSO as shown in 5.5.1 and make the following changes :

  Select Setup trigger
  Set Trigger on : **EXT**

  External : **DC 50Ω**

- Connect the DMM to External.

- Measure the **voltage** and enter it in Table 3. Compare it to the limits.

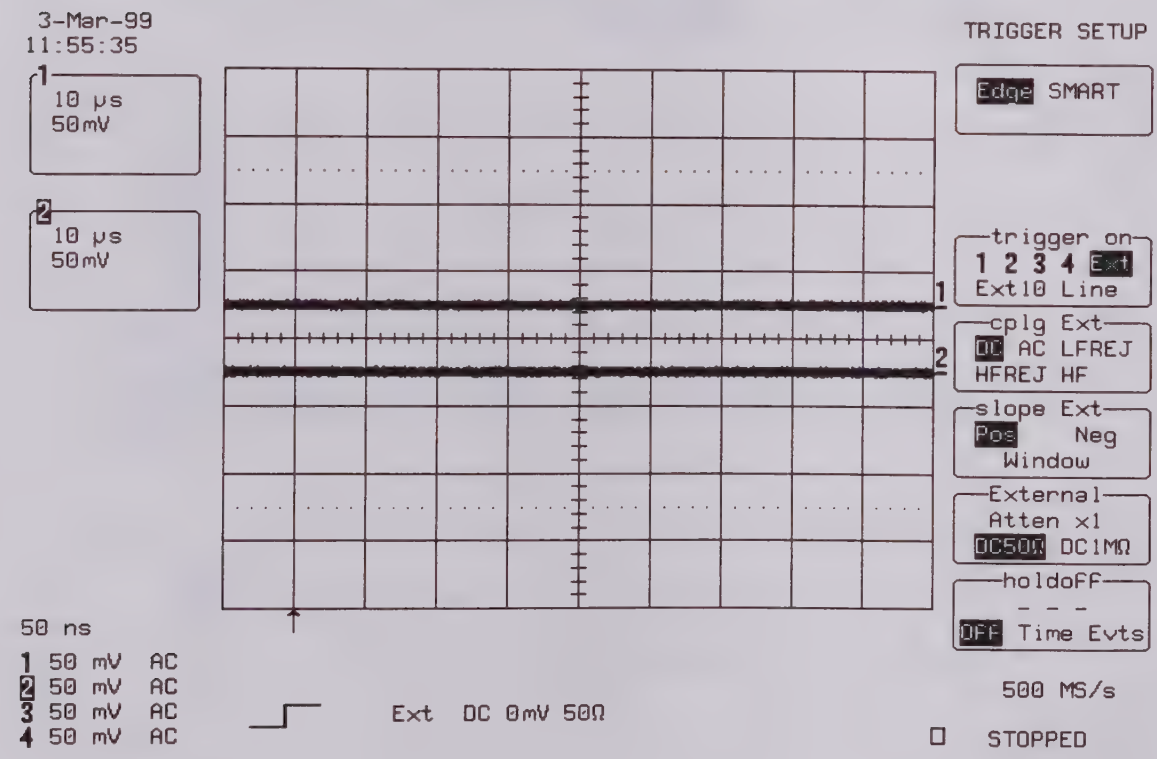

5.6 Noise

Noise tests with open inputs are executed on all channels for both 1MΩ and 50Ω input impedance, with AC and DC input coupling, 0 mV offset, at a gain setting of 5mV/div., and different Time base settings.
The scope parameters functions are used to measure the RMS amplitude.

5.6.1 Rms Noise

Test limits

1 % of full scale or 0.4 mV rms at 5 mV/div.

Procedure

a. DC 1MΩ

With no signal connected to the inputs

- Recall **LTxxxP012.PNL** or configure the DSO :

Panel Setups	:	**Recall FROM DEFAULT SETUP**
Channels Trace ON		**Channel 1, Channel 2, Channel 3 & Channel 4**
Input Coupling	:	**DC 1MΩ** on all 4 Channels
Input gain	:	5 **mV/div.** on all 4 Channels
Trigger setup	:	**Edge**
Trigger on	:	**1**
Coupling 1	:	**DC**
Trigger Mode	:	**Auto**
Time base	:	**20 msec/div.**
Channel use	:	**4**
Record up to	:	**50 k Samples**
Press	:	**MEASURE TOOLS**
Measure	:	**Parameters**
Mode	:	**Custom**
Statistics	:	**On**
Change parameters		
Category	:	**All**
On line 1	:	**Measure sdev of Ch1**
On line 2	:	**Measure sdev of Ch2**
On line 3	:	**Measure sdev of Ch3**
On line 4	:	**Measure sdev of Ch4**
On line 5	:	**no parameter selected for line 5**

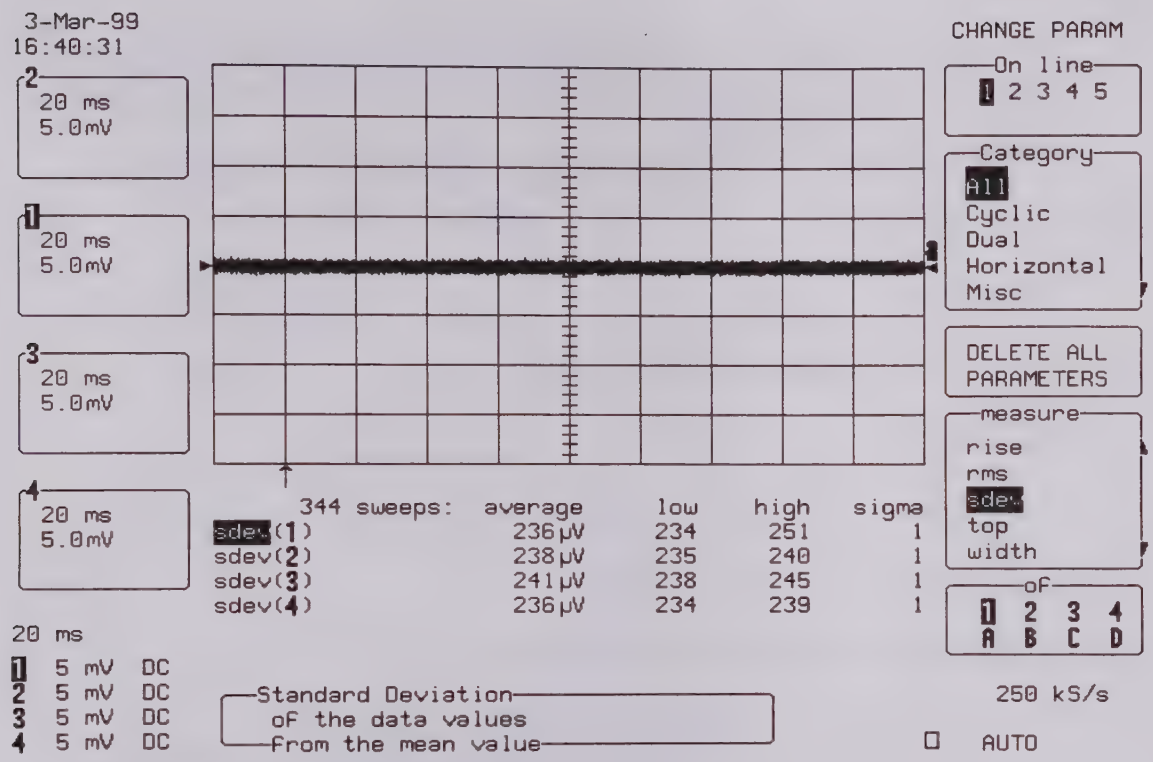

- Press **Clear Sweeps.**
- Measure for at least **50 sweeps**, then press **Stop** to halt the acquisition.
- Record the four **high sdev** parameter values in Table 4, and compare the test results to the limits in the test record.
- Repeat the test for Time base : **1 msec/div.**, **50 µsec/div.**, and **2 µsec/div.**
- Record the measurements (high sdev of 1,2,3,4) in Table 4, and compare the results to the limits in the test record.

b. AC 1MΩ

- Recall **LTxxxP013.PNL** or configure the DSO as shown in 5.6.1 and for each Channel make the following change :

  Input Coupling : **AC 1MΩ** on all 4 Channels

  Time base : **2 µsec/div.**
- Press **Clear Sweeps.**

- Measure for at least **50 sweeps**, then press **Stop** to halt the acquisition.
- Record the four **high sdev** parameter values in Table 4, and compare the test results to the limits in the test record.

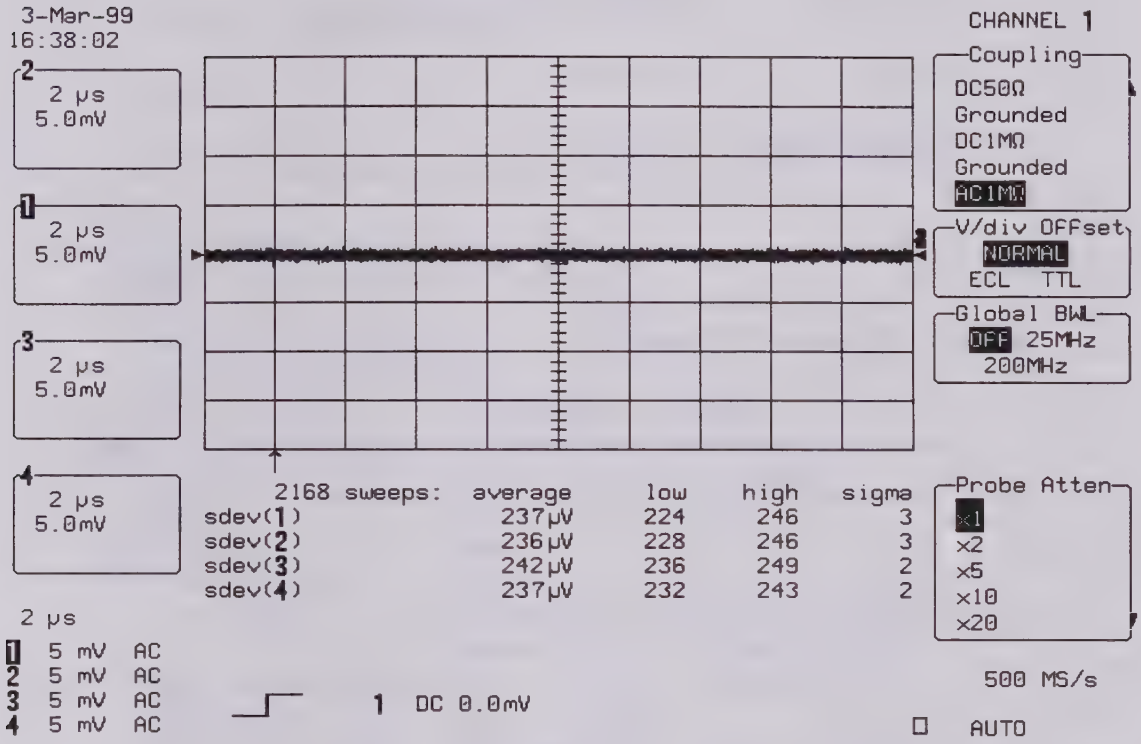

c. DC 50Ω

- Recall **LTxxxP014.PNL** or configure the DSO as shown in 5.6.1 and make the following changes :

  Input Coupling : **DC 50Ω** on all 4 Channels

  Time base : **2 µsec/div.**

- Press **Clear Sweeps.**

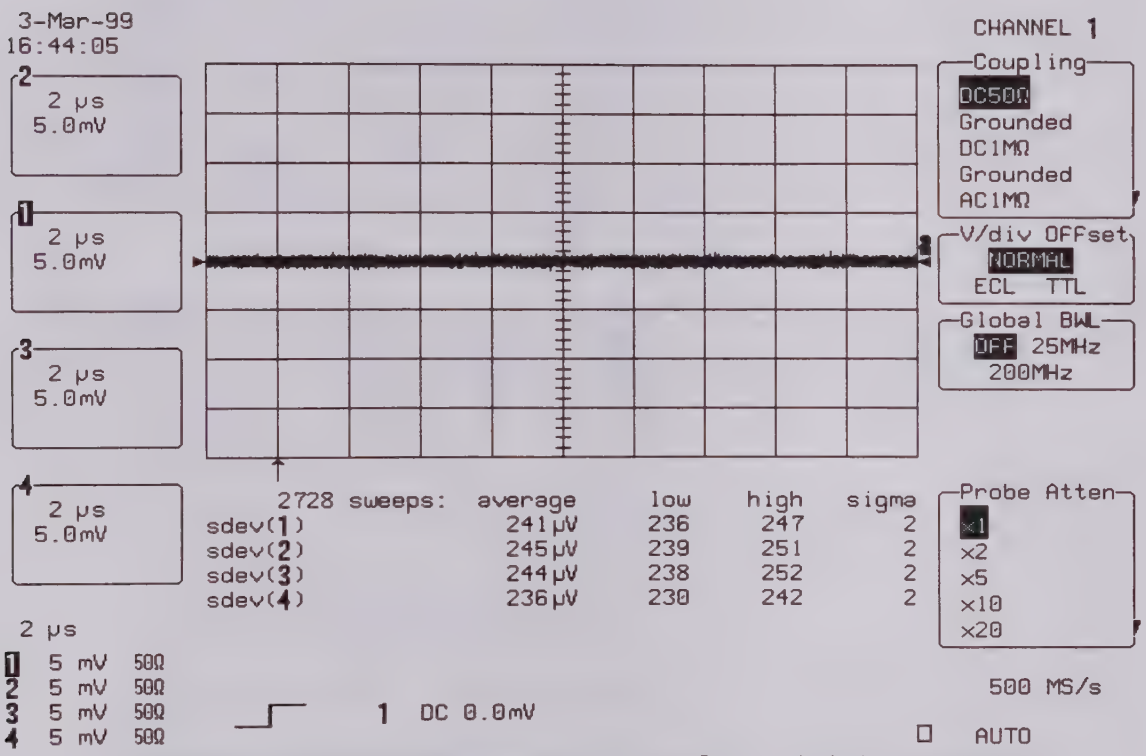

- Measure for at least **50 sweeps**, then press **Stop** to halt the acquisition.

- Record the four **high sdev** parameter values in Table 4, and compare the test results to the limits in the test record.

- Repeat the test for Time base : **20 µsec/div.**

- Record the measurements (high sdev of 1,2,3,4) in Table 4, and compare the results to the limits in the test record.

5.6.2 Erroneous Read / Write Test

Test limit

±2.5 % of full scale at 50 mV/div.

Procedure

a. Channel 1, Channel 2, Channel 3 and Channel 4

- For **LT Series** recall **LTxxxP015.PNL**,
  for **LT 34XL** recall **LT344 P016.PNL**.

Channels Trace ON		**Channel 1, Channel 2, Channel 3 & Channel 4**
Zoom+Math Trace ON		**D**
Input Coupling	:	**DC 50Ω** on all 4 Channels
Global BWL ON	:	**25MHz**
Input gain	:	**50 mV/div.** on all 4 Channels
Offset	:	**Zero** on all 4 Channels
Trigger on	:	**Line**
Trigger mode	:	**Normal**
Time base	:	**50 µsec/div** for **LT344, LT342, LT322 and LT224** **200us/div** for **LT344L and LT342L**
Select Setup timebase		
Channel use	:	**4**
Record up to	:	**100K samples** for **LT322** and **LT224** **250K samples** for **LT344** and **LT342** **1M samples** for **LT344L and LT342L**
Select Math Setup		
For Math	:	**Use at most 500 points**
Redefine A	:	**A=1-1**
Use Math?	:	**Yes**
Math Type	:	**Arithmetic**
Difference	:	**1 minus 1**
Redefine B	:	**B=2**
Use Math?	:	**No**
Trace B is Zoom of		**2**
Redefine D	:	**D=M1**
Use Math?	:	**No**
Trace D is Zoom of		**M1**

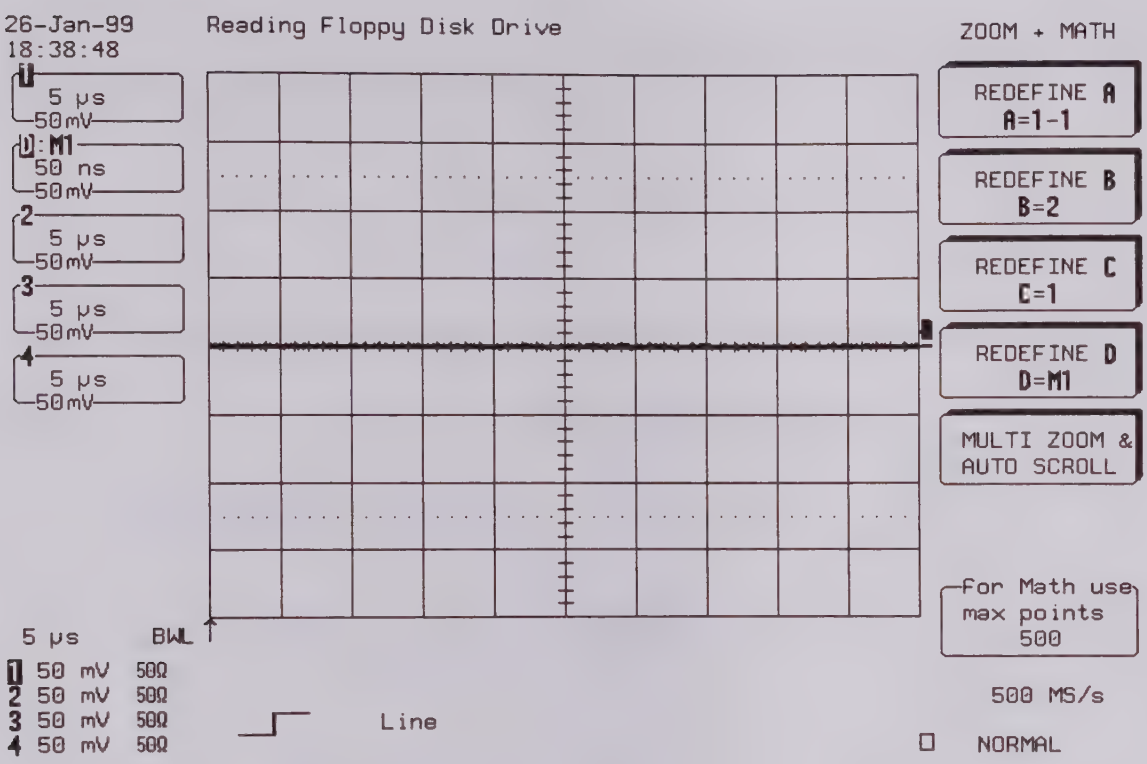

- Press **Reset** Zoom+Math
- Press **MEASURE TOOLS**

Measure	:	**Parameters**
Mode	:	**Pass**
Testing	:	**On**
Select	:	**Change Test Conditions**
On line	:	**Action**
If	:	**Fail**
Then	:	**Stop Yes** **Store No** **Dump No** **Beep Yes** **Pulse No**
On line 1	:	**Test on Mask** **True if all points of 1 are inside mask D**
On line 2	:	**Test on Mask** **True if all points of 2 are inside mask D**
On line 3	:	**Test on Mask** **True if all points of 3 are inside mask D**
On line 4	:	**Test on Mask** **True if all points of 4 are inside mask D**

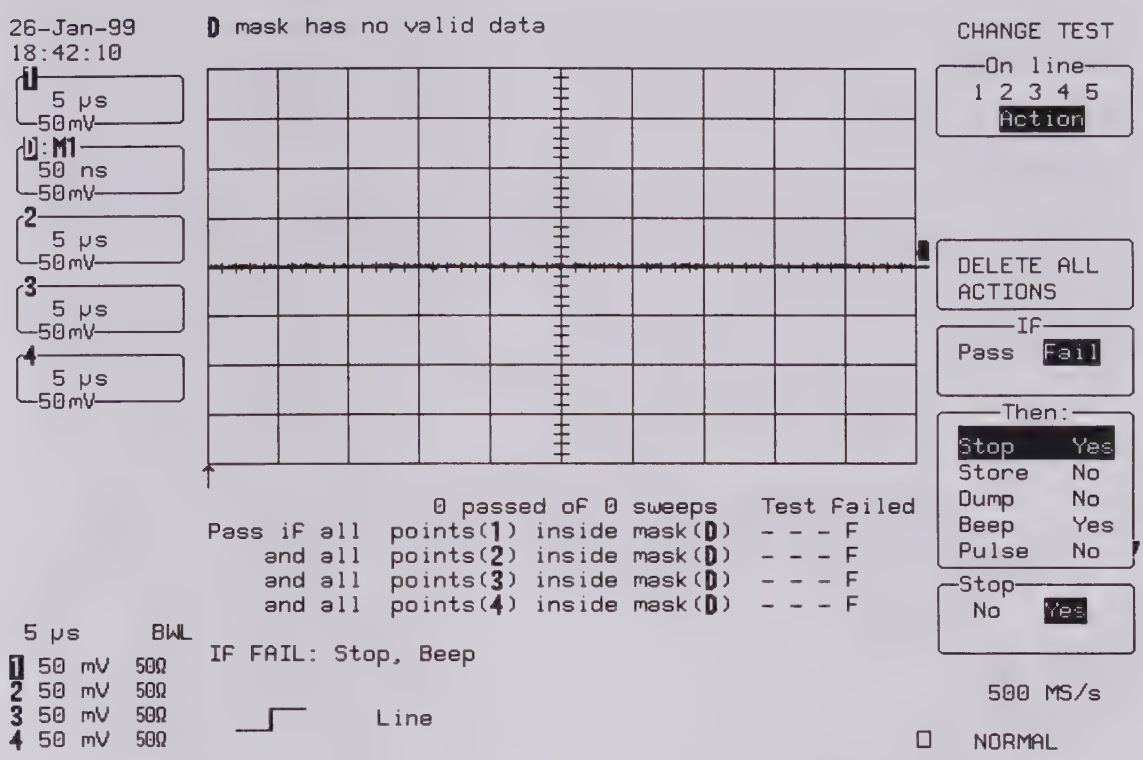
26-Jan-99
18:42:10
D mask has no valid data
CHANGE TEST
On line
1 2 3 4 5
Action
5 µs
50mV
M1
50 ns
50mV
2
5 µs
50mV
3
5 µs
50mV
4
5 µs
50mV
DELETE ALL
ACTIONS
IF
Pass Fail
Then:
Stop Yes
Store No
Dump No
Beep Yes
Pulse No
Stop
No Yes
0 passed of 0 sweeps Test Failed
Pass if all points(1) inside mask(D) - - - F
and all points(2) inside mask(D) - - - F
and all points(3) inside mask(D) - - - F
and all points(4) inside mask(D) - - - F
5 µs BWL
1 50 mV 50Ω
2 50 mV 50Ω
3 50 mV 50Ω
4 50 mV 50Ω
IF FAIL: Stop, Beep
Line
500 MS/s
NORMAL

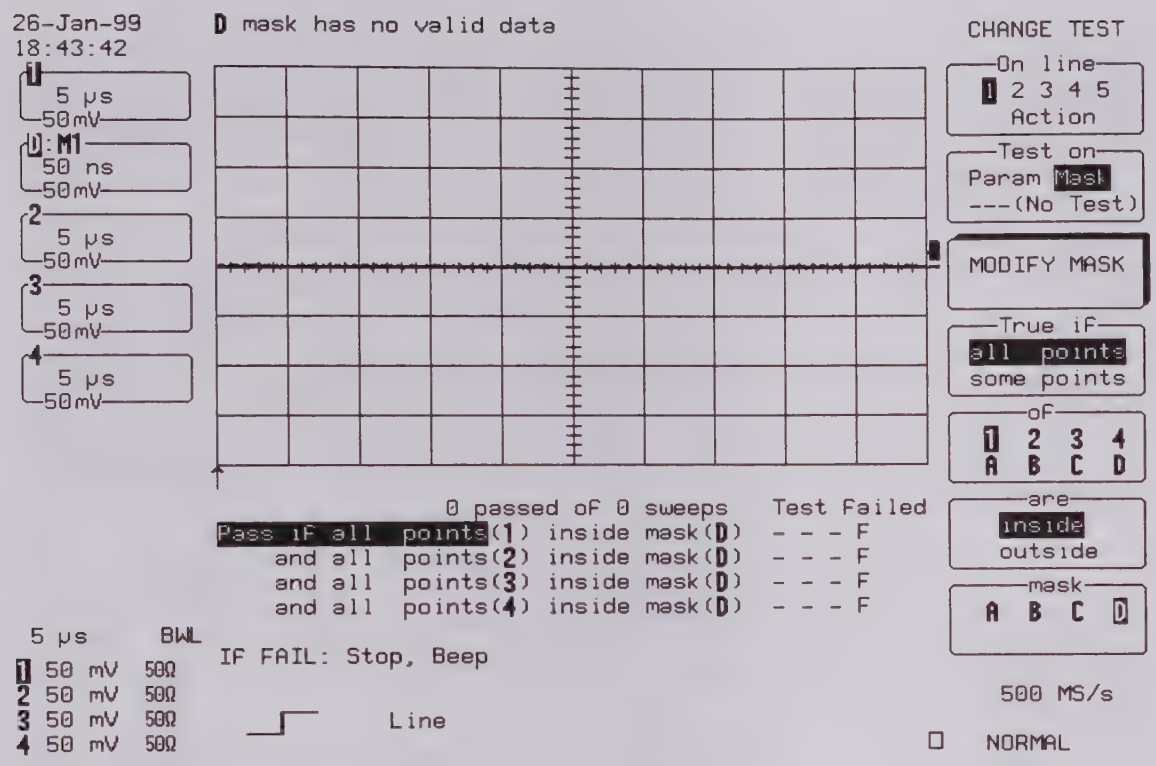

- Select Modify Mask

From	:	**W'form**
Into	:	**M1**
Use W'form	:	**A**
Delta V	:	**0.20 div**
Delta T	:	**0.00 div**

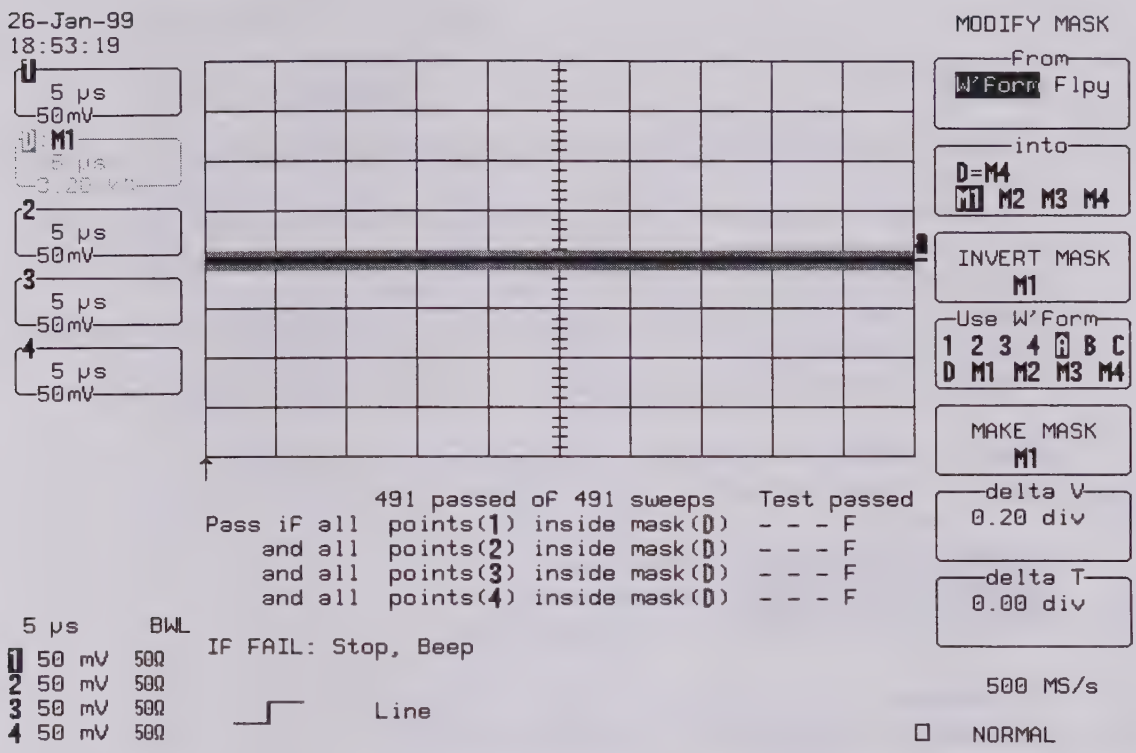

- To start the test, select **MEASURE TOOLS**, **Change Test Conditions**, **Modify Mask** and press **Make Mask M1**

- After **1000** sweeps for **LT322** and **LT224, or 400** sweeps for **LT344** and **LT342**, or after **100** sweeps for **LT344L** check that the number of Passed equals the number of Sweeps on all 4 Channels.

- Record the test result in Table 5.

5.7 DC Accuracy

This test measures the DC Accuracy of the absolute voltage measurements at 0V offset setting.
It requires a DC source with a voltage range of 0 V to 20 V adjustable in steps of no more than 15 mV, and a calibrated DMM that can measure voltage to 0.1 %.
Measurements are made using voltage values applied by the external voltage reference source, measured by the DMM, and in the oscilloscope using the parameters Std voltage.
For each known input voltage, the deviation is checked against the tolerance.

Specification & Test limits

$\pm(0.015 \times |Vm + Voffset| + 0.015 \times |Voffset| + 0.01 \times FS + 1mV)$

Vm [volts] = voltage reading [volts]
FS [volts] = 8[div] x sensitivity [volt/div]
Voffset [volts] = setting offset voltage [volts]

Procedure

▪Recall **LTxxxP017.PNL** or configure the DSO:

Panel Setups	:	**Recall FROM DEFAULT SETUP**
Channels Trace ON		**Channel 1, Channel 2, Channel 3 & Channel 4**
Input Coupling	:	**DC 1MΩ** on all 4 Channels
Input offset	:	**0.0 mV** on all 4 Channels
Input gain	:	from **2mV/div to 1 V/div and 5V/div.** (see Table 6) on all 4 Ch
Trigger setup	:	**Edge**
Trigger on	:	**line**
Slope line	:	**Positive**
Mode	:	**Auto**
Time base	:	**2 msec/div**.
Channel use	:	**4**
Record up to	:	**25 k**
Channels Trace OFF		**Channel 1, Channel 2, Channel 3 & Channel 4**
MATH TOOLS Trace ON		**A, B, C & D**
Select Math Setup		
For Math	:	**Use at most 5000 points**
Redefine A, B, C, D		**Channel 1, Channel 2, Channel 3 & Channel 4**
Use Math ?	:	**Yes**
Math Type	:	**Average**
Avg. Type	:	**Summed**
For	:	**100 sweeps**
MEASURE TOOLS	:	**Parameters**
Mode	:	**Custom**

Statistics : **off**

Change parameters

On line 1 : **Measure mean of A**
On line 2 : **Measure mean of B**
On line 3 : **Measure mean of C**
On line 4 : **Measure mean of D**

- For the low sensitivities: **2 mV, 5 mV, 10 mV and 20 mV/div**., connect the test equipment as shown in Figure 5-1.
-

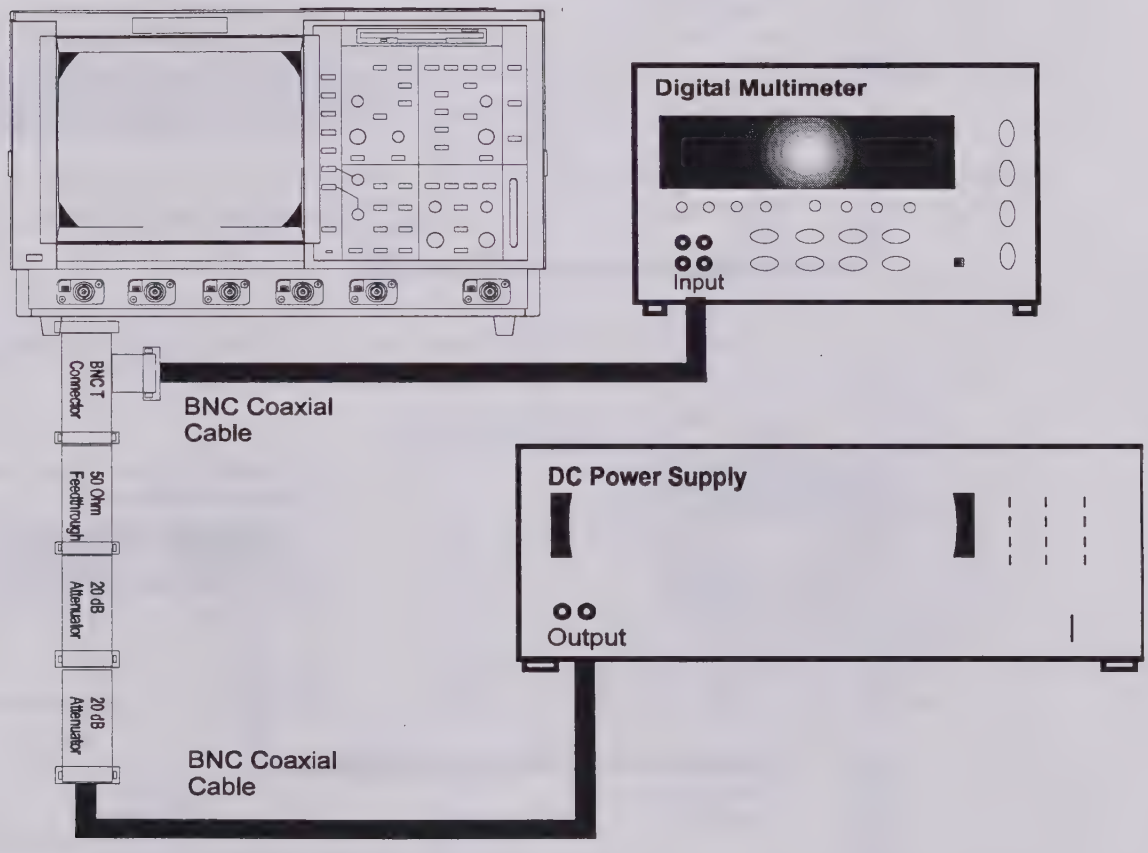

Figure 5-1: DC 1MΩ Accuracy Equipment Setup for 2,5,10 and 20 mV/div.

- For 100 mV/div, connect the test equipment as shown in Figure 5-2.
- For 5V/div no attenuator is required, connect the test equipment as shown in Figure 5-3.

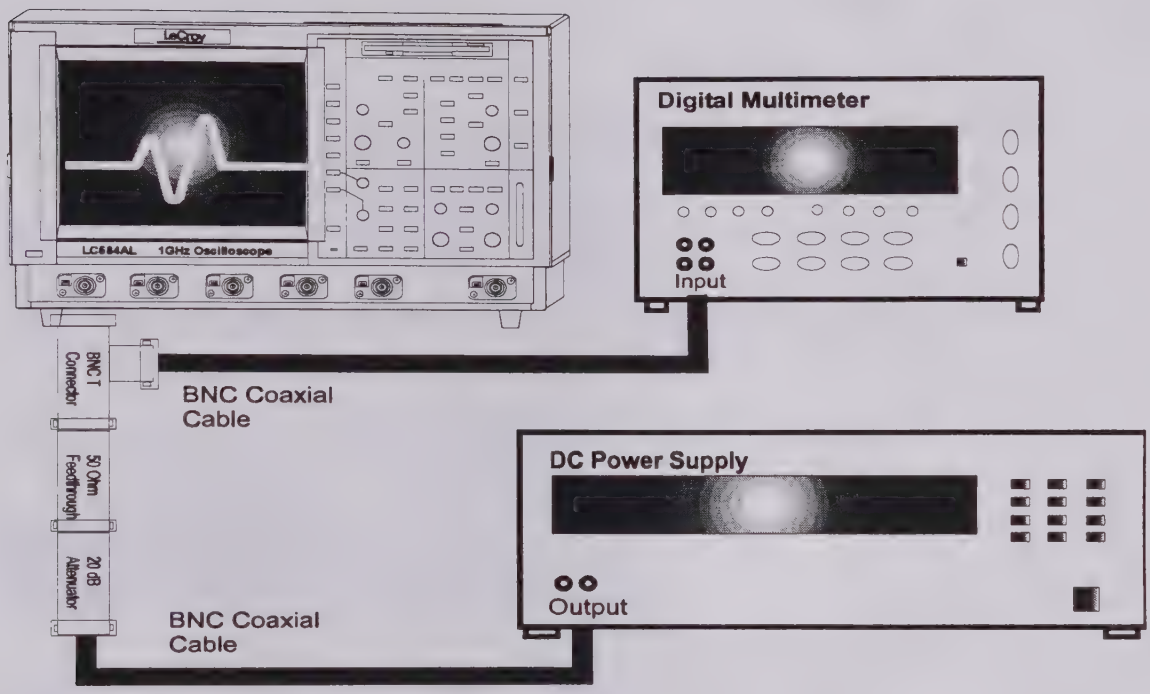

Figure 5-2 : DC 1MΩ Accuracy Equipment Setup for 100 mV/div

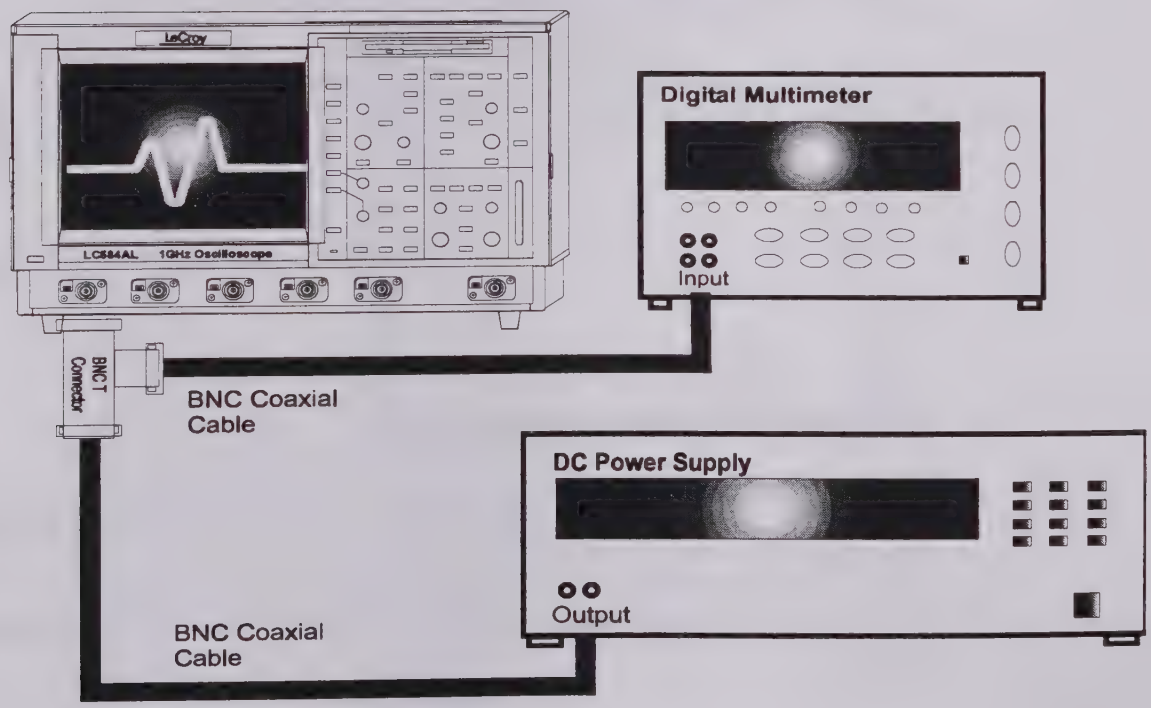

Figure 5-3 : DC 1MΩ Accuracy Equipment Setup for 5V/div.

- For each **DSO Volts/div**, set the output of the external **DC voltage reference source** as shown in Table 6, column PS output.
  1) Connect the DMM and record the **voltage reading** in Table 6, column **DMM.**

  2) Disconnect the DMM from the BNC T connector.

  3) Press **Clear Sweeps**

  4) After 100 sweeps, read off the **DSO mean parameter**, and record the measurement in Table 6, column **Mean**.

- For each DC voltage applied to the DSO input, repeat parts 1), 2), 3) and 4).

- Calculate the **Difference (Δ)** by subtracting the **DMM voltage** reading from the **DSO mean** voltage reading. Record the test result in Table 6, and compare the **Difference (Δ)** to the corresponding limit in the test record.

- Repeat step 5.7 Procedure for the other channels, substituting channel controls and input connector.

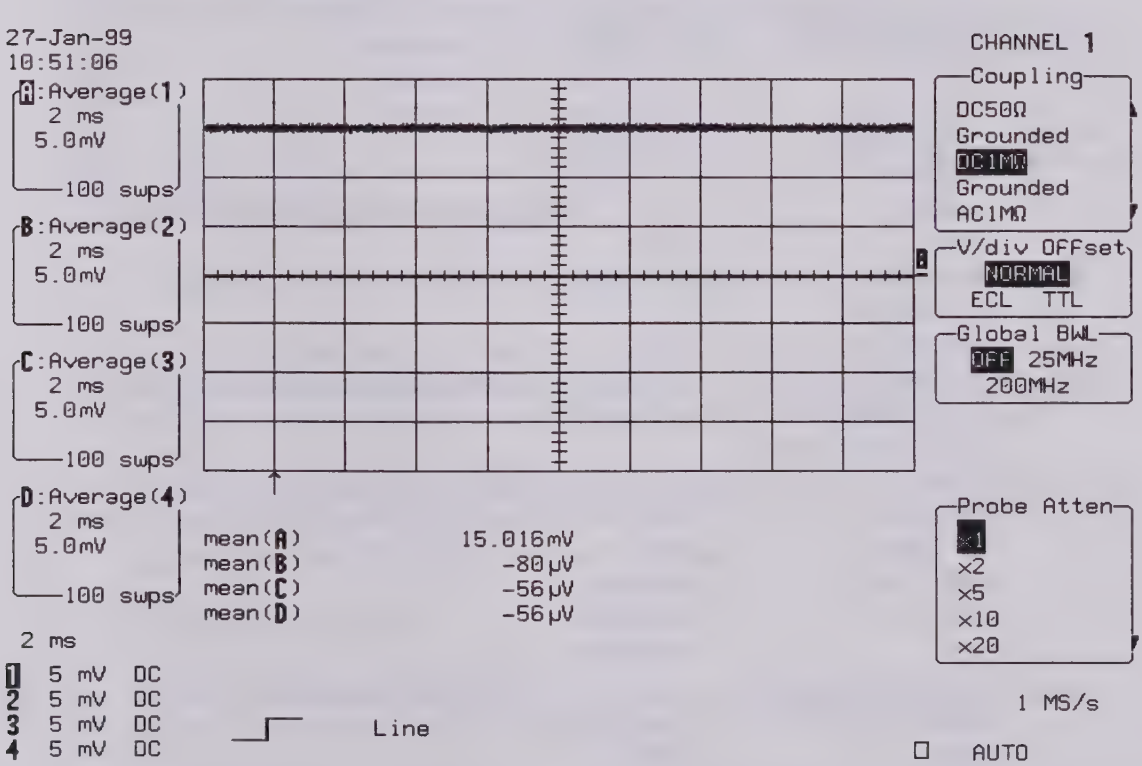

5.8 Offset Accuracy

The offset test is done at 5mV/div, with a signal of ±1 Volt cancelled by an offset of the other polarity.

Specifications

± (0.015 x Voffset + 0.005 x FS + 1mV)

FS [volts] = 8[div] x sensitivity[volts/div]
Voffset [volts] = setting offset voltage

Procedure

- Recall **LTxxxP018.PNL** or configure the DSO:

Panel Setups	:	**Recall FROM DEFAULT SETUP**
Channels Trace ON		**Channel 1, Channel 2, Channel 3 & Channel 4**
Input Coupling	:	**DC 1MΩ** on all 4 Channels
Input gain	:	5**mV/div** on all 4 Channels
Input offset	:	**+1 Volt** on all 4 Channels
Trigger setup	:	**Edge**
Trigger on	:	**1**
Coupling 1	:	**DC**
Mode	:	**Auto**
Time base	:	**2 msec/div**.
Channel use	:	**4**
Record up to	:	**25 k**
Channels Trace OFF		**Channel 1, Channel 2, Channel 3 & Channel 4**
Zoom+Math Trace ON		**A, B, C & D**
Select Math Setup		
For Math	:	**Use at most 5000 points**
Redefine A, B, C, D		**Channel 1, Channel 2, Channel 3 & Channel 4**
Use Math ?	:	**Yes**
Math Type	:	**Average**
Avg. Type	:	**Summed**
For	:	**100 sweeps**
MEASURE TOOLS:		**Parameters**
Mode	:	**Custom**
Statistics	:	**off**

- Connect the test equipment as shown in Figure 5-4.

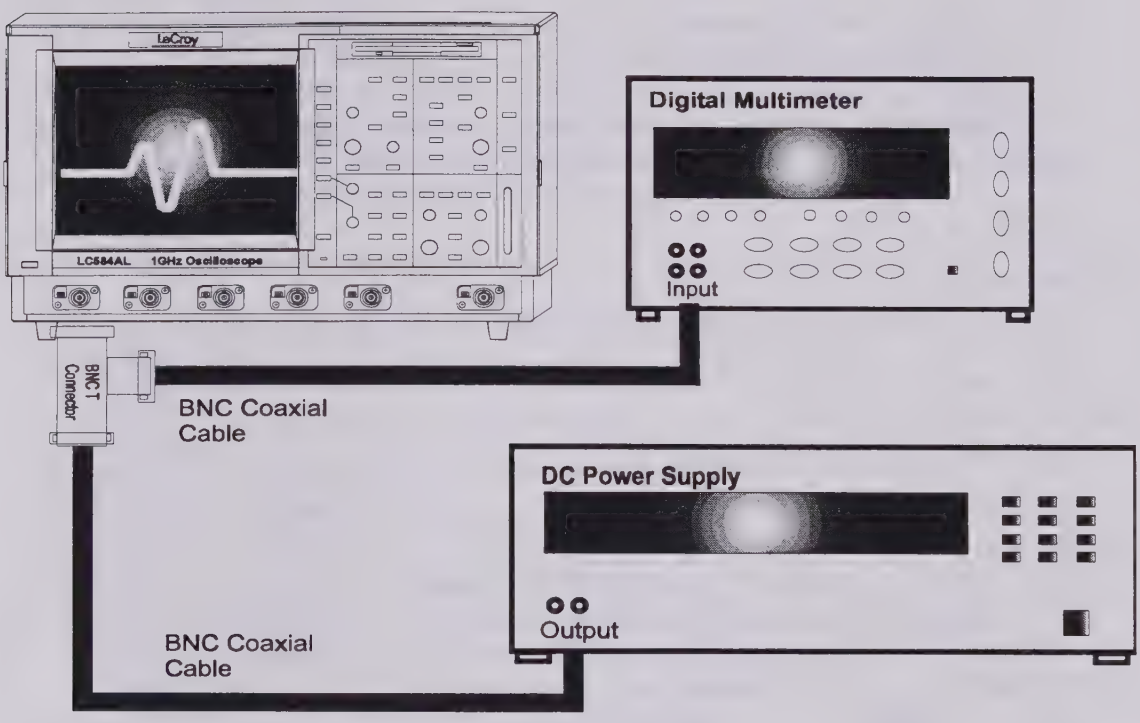

- Set the output of the external **DC voltage reference source** to **–1 Volt**.

  1) Verify that the displayed trace A : Average (1) is on the screen, near the center horizontal graticule line. If the trace is not visible, modify the **DC voltage reference source output** until the trace is within ± 2 divisions of center.

  2) Connect the DMM and record the **voltage reading** in Table 7, column **DMM**.

  3) Disconnect the DMM from the BNC T connector.

  4) Press **Clear Sweeps**

  5) After 100 sweeps, Read off the **DSO Mean parameter** voltage, and record the measurement in Table 7, column **Mean**.

- Repeat the test for the other channels, substituting channel controls and input connector. Record the measurements in Table 7.

- Repeat the test the other offset settings –1V and 0V.

Recall **LTxxxP019.PNL** for Input offset –1V.
Recall **LTxxxP020.PNL** for Input offset 0V.
Record the measurements in Table 7.

- Calculate the **Difference (Δ)** by subtracting the **DMM voltage** reading from the **DSO mean** voltage reading.
- Record the test result in Table 7, and compare the **Difference (Δ)** to the corresponding limit in the test record.

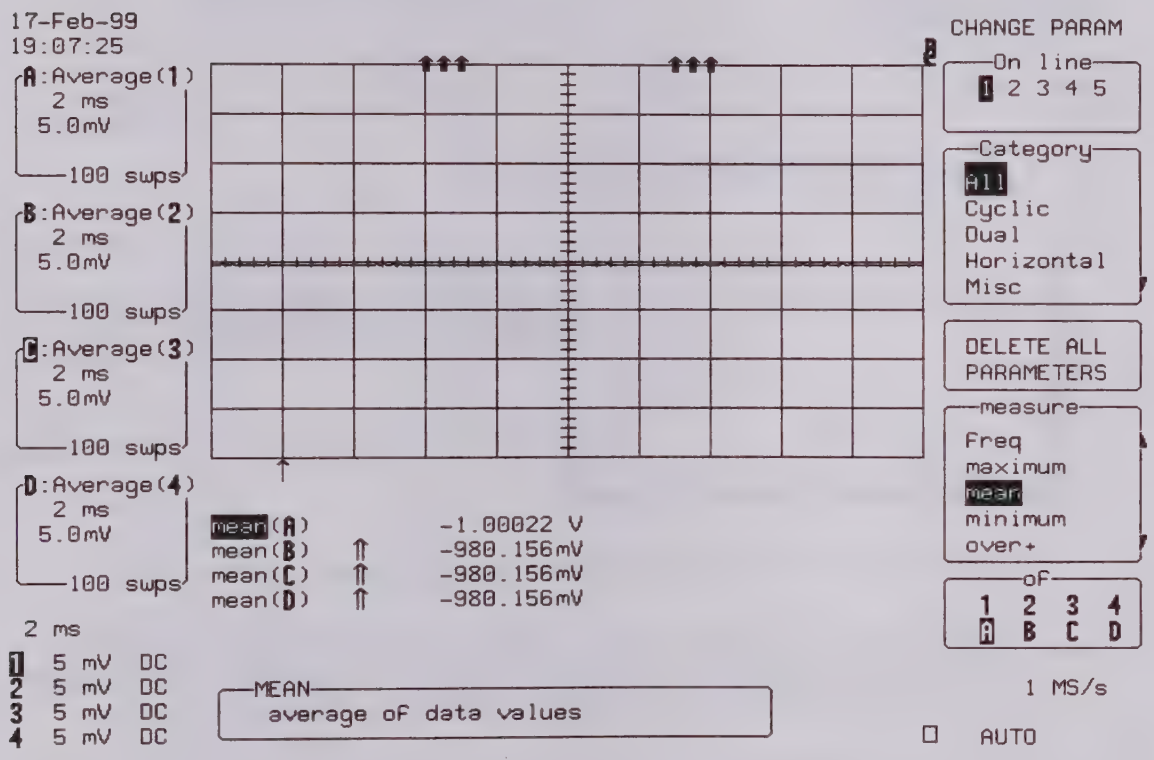

5.9 Bandwidth

The purpose of this test is to ensure that the entire system has a bandwidth of at least 500MHz or 200MHz. An external source is used as the reference to provide a signal where amplitude and frequency are well controlled.
The amplitude of the generator as a function of frequency and power is calibrated using an HP8482A sensor on an HP437B power meter or equivalent.

Specifications & Test limits

DC to 500MHz (10mV to 5V/div) for LT344/L, LT342/L, LT322
DC to 200MHz (5mV to 10V/div) for LT224

Procedure

- Recall **LTxxxP021.PNL** or configure the DSO

Panel Setups	:	**Recall FROM DEFAULT SETUP**
Channels Trace ON		**Channel 1, Channel 2, Channel 3 & Channel 4**
Input Coupling	:	**DC 50Ω** on all 4 Channels
Input gain	:	**50 mV/div** on all 4 Channels
Input offset	:	**0 mV** on all 4 Channels
Trigger setup	:	**Edge**
Trigger on	:	**Line**
Slope line	:	**Pos**
Mode	:	**Auto**
Time base	:	**1 µsec/div**.
Channel use	:	**4**
Record up to	:	**25 k**
MEASURE TOOLS	:	**Parameters**
Mode	:	**Custom**
Statistics	:	**On**
Change parameters		
On line 1	:	**Sdev of 1**
On line 2	:	**Sdev of 2**
On line 3	:	**Sdev of 3**
On line 4	:	**Sdev of 4**

- Connect the HP8482A power sensor to the power meter.

- Zero and **calibrate** the HP8482A power sensor using the power meter **Power Ref output**.

- Connect a **BNC adapter** to the HP8482A power sensor.
- Connect a 5ns 50Ω BNC cable to the **RF output** of the HP8648B generator and then through a 6dB attenuator and the necessary adapters to the power sensor.

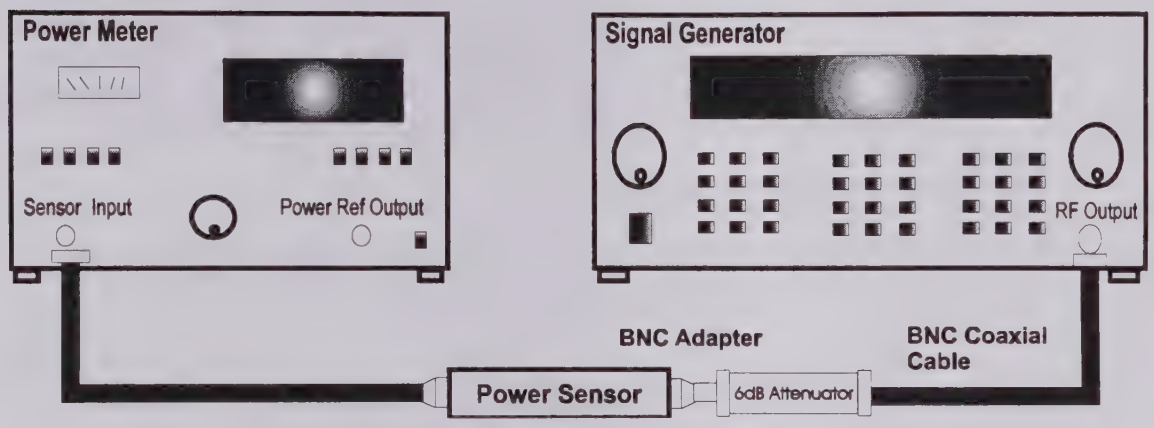

Figure 5-5 : Power Meter Equipment Setup

- Set the generator frequency to **300 kHz**
- Set the generator amplitude to measure **0.200 mW** on the power meter.
- Read the displayed **generator output amplitude**, and record it in the third column of Table 8.
- Repeat the above measurement for 1.1 MHz, 10.1 MHz, 100.1 MHz, 200.1MHz, 300.1 MHz & 500.1 MHz. Record the generator output amplitude readout in the third column of Table 8.

- Disconnect the **RF output** of the HP8648B generator from the HP8482A power sensor.
- Connect the **RF output** of the HP8648B generator through a 5ns 50 Ohm BNC cable and a 6 dB attenuator into Channel 1.
- Set the generator frequency to **300 kHz**.
- From the generator, apply the **recorded generator signal amplitude** to Channel 1.
- Press **Clear Sweeps**.

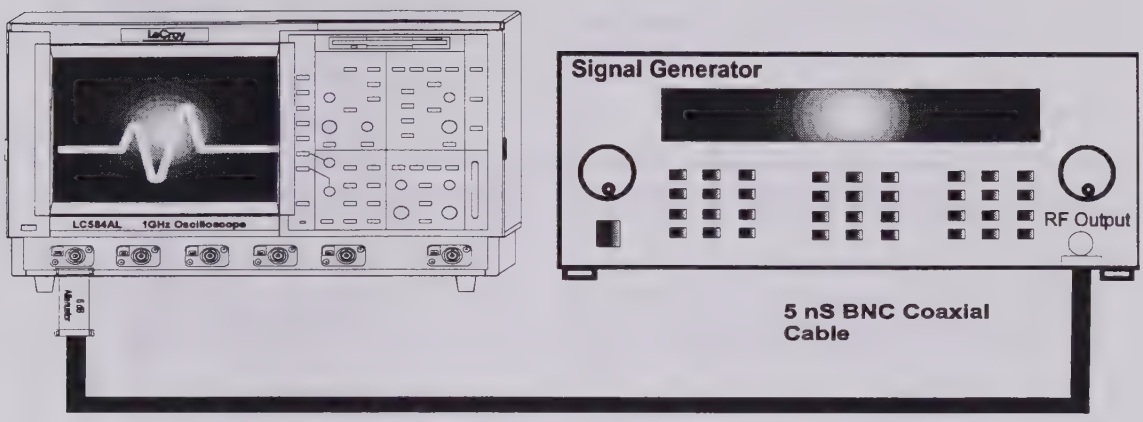

Figure 5-6 : 50Ω Bandwidth Equipment Setup

- Measure for at least 100 sweeps, record the average value of **sdev(1)** I nTable 8

- Repeat the above 3 steps for Channel 2, Channel 3 & Channel 4 substituting channel controls and input connector. Record the measurements in Table 8.

- Repeat the above measurement for all channels for 1.1 MHz, 10.1 MHz, 100.1 MHz, 200.1MHz, 300.1 MHz and 500.1 MHz and record the values in Table 8.

- Calculate the ratio to .3MHz for each frequency.
  Ratio = (sdev of XXXMHz) / (sdev of 0.3MHz)
  and compare the results to the limits in the test record.

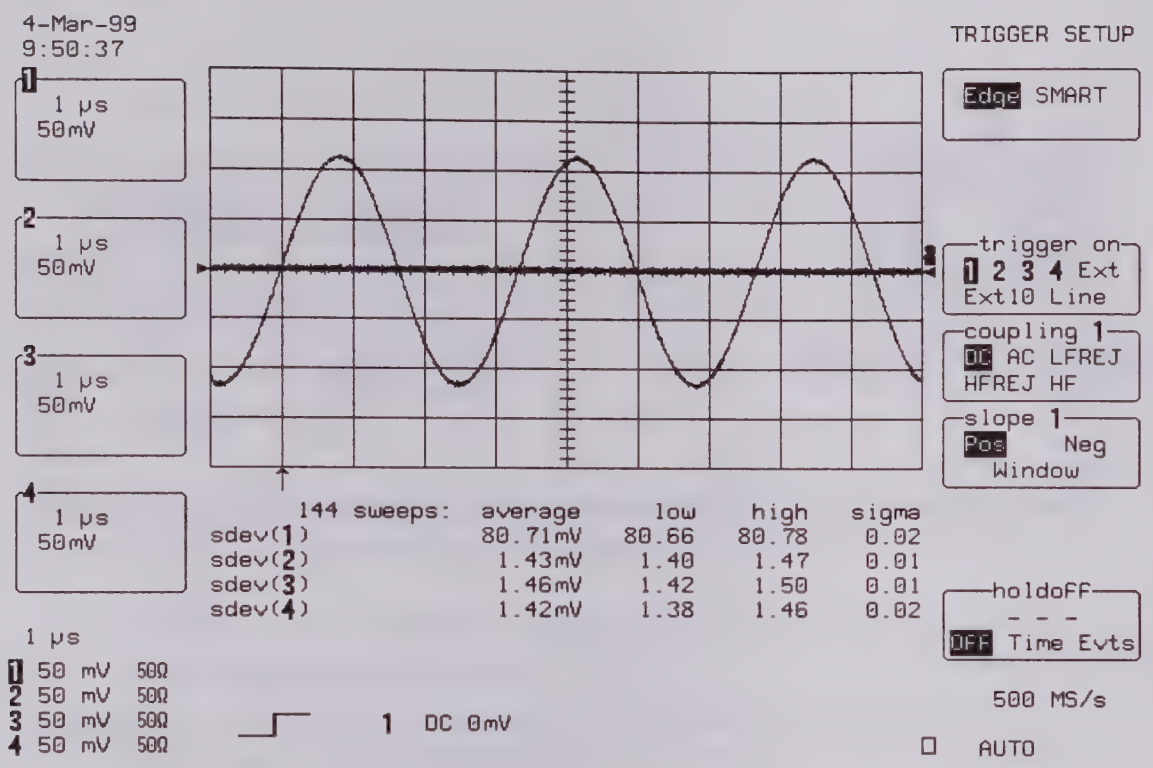

- Recall **LTxxxP022.PNL** or configure the DSO as shown in 5.9 and for each Channel make the following change :

Input gain : **100mV/div**

- Connect the test equipment as shown in Figure 5-5.
- Set the generator frequency to **300 kHz**
- Set the generator amplitude to measure **0.800 mW** on the power meter.
- Read the displayed **generator output amplitude,** and record it in the third column of Table 9.
- Repeat the above measurement for **1.1 MHz, 10.1 MHz, 100.1 MHz, 200.1MHz, 300.1 MHz & 500.1 MHz**. Record the generator output amplitude readout in the third column of Table 9.
- Disconnect the **RF output** of the HP8648B generator from the HP8482A power sensor.
- Connect the test equipment as shown in Figure 5-6.

- Set the generator frequency to **300 kHz**.
- From the generator, apply the **recorded generator signal amplitude** to Channel 1.
- Press **Clear Sweeps**.
- Measure for at least 100 sweeps, record the average value of **sdev(1)** in Table 9
- Repeat the above 3 steps for Channel 2, Channel 3 & Channel 4 substituting channel controls and input connector. Record the measurements in Table 9.
- Repeat the above measurement for all channels for 1.1 MHz, 10.1 MHz, 100.1 MHz, 200.1MHz, 300.1 MHz and 500.1 MHz and record the values in Table 9.
- Calculate the ratio to .3 MHz for each frequency.
  Ratio = (sdev of XXXMHz) / (sdev of 0.3MHz)
  and compare the results to the limits in the test record.

b. DC 50Ω with Bandwidth Limiter On

- Recall **LTxxxP023.PNL** or configure the DSO:

Panel Setups	:	**Recall FROM DEFAULT SETUP**
Channels Trace ON		**Channel 1**
Input Coupling	:	**DC 50Ω**
Global BWL	:	**25 MHz**
Input gain	:	**100 mV/div.**
Input offset	:	**0 mV**
Trigger setup	:	**Edge**
Trigger on	:	**1**
Slope line	:	**Pos**
Mode	:	**Auto**
Time base	:	**1 μsec/div**.
Channel use	:	**4**
Record up to	:	**25 k**
MEASURE TOOLS		: **Parameters**
Mode	:	**Custom**
Statistics	:	**Off**
Change parameters		
On line 1	:	**Sdev of 1**
On line 2	:	**Freq of 1**

- Connect the test equipment as shown in Figure 5-6.
- Set the generator frequency to **300 kHz**.
- Adjust the generator signal amplitude to measure **sdev(1) = 200 mV.**
- Set Time base : **50 nsec/div**.
- Increase the generator frequency until **sdev(1) = 140 mV.** (typically 25 MHz)
- Press **Clear Sweeps**
- When **sdev(1) = 140 mV,** record Freq(1) in Table 10.
- Check that the frequency is within the limits specified in Table 10.

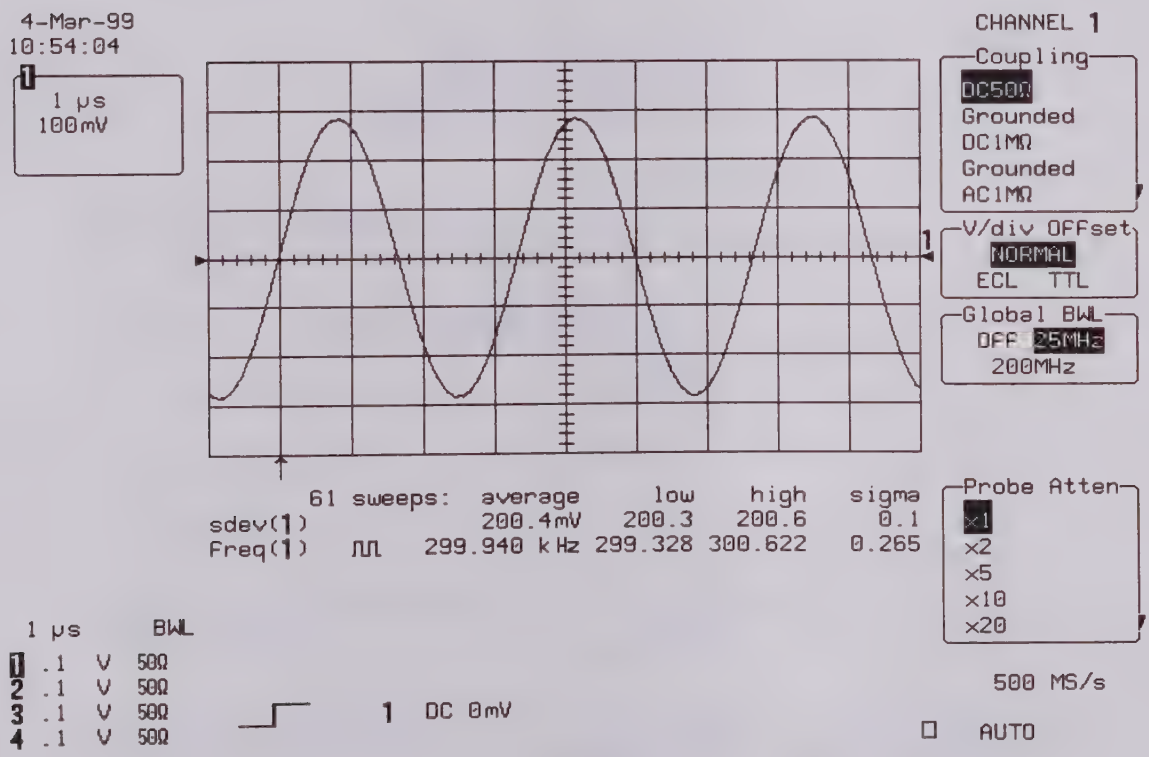

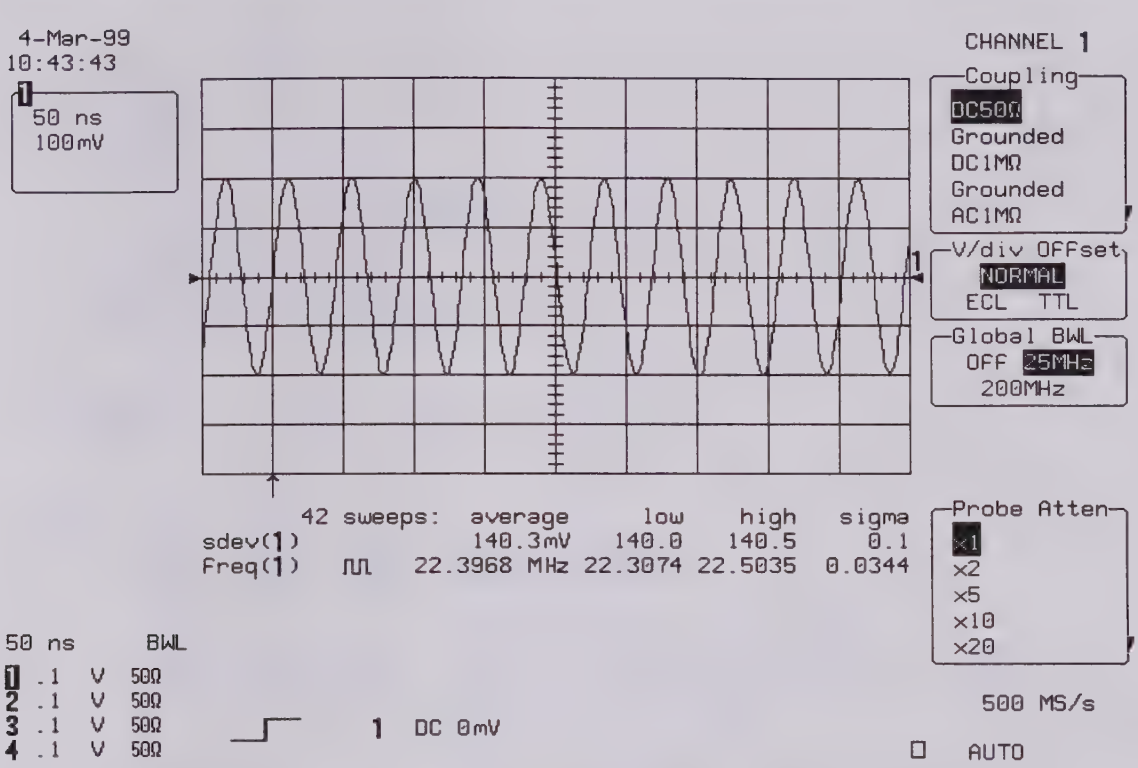

The following test of BWL: 200MHz is not applied for LT224.

- Set Global BWL : **200 MHz**
- Set Timebase : **5 nsec/div**.
- Increase the generator frequency until **sdev(1) = 140 mV.** (typically 200 MHz)

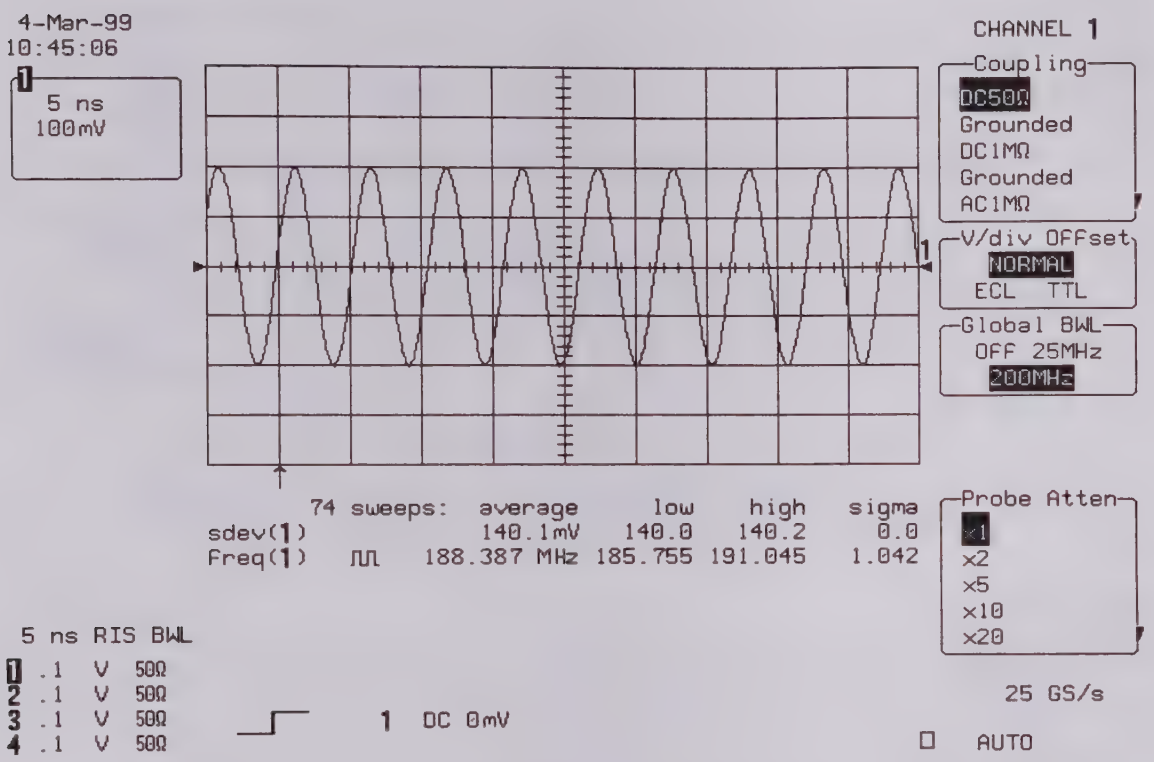

- Press **Clear Sweeps**
- When **sdev(1) = 140 mV,** record Freq(1) in Table 10.
- Repeat the 25 MHz and 200 MHz Bandwidth limiter tests for the other channels, substituting channel controls and input connector.
- Recall **LTxxxP024.PNL** for Channel 2, **LTxxxP025.PNL** for Channel3 **LTxxxP026.PNL** for Channel 4, or configure the DSO as shown in 5.9.1 Procedure and make the necessary changes.
- Record the test results in Table 10, and compare the results to the limits.

5.10 Trigger Level

The trigger capabilities are tested for several cases of the standard edge trigger:

- Channel (internal), and External Trigger sources
- Three DC levels: –3, 0, +3 major screen divisions
- DC, HFREJ coupling
- Positive and negative slopes

5.10.1 Channel Trigger at 0 Division Threshold

a. DC Coupling

Recall **LTxxxP027.PNL** or configure the DSO:

Panel Setups	:	**Recall FROM DEFAULT SETUP**
Channels Trace ON		**Channel 1, Channel 2, Channel 3 & Channel 4**
Input Coupling	:	**DC 50Ω** on all 4 Channels
Input gain	:	**100 mV/div.** on all 4 Channels
Input offset	:	**0 mV** on all 4 Channels (use show status to verify)
Trigger setup	:	**Edge**
Trigger on	:	**1**
Slope 1	:	**Pos**
Coupling	:	**DC**
Mode	:	**Auto**
Set Trigger level	:	**DC 0.0 mV**
Pre-Trigger Delay	:	**50 %**
Time base	:	**0.1 msec/div.**
Record up to	:	**50 k samples**
Channels Trace OFF		**Channel 1, Channel 2, Channel 3 & Channel 4**
Zoom+Math Trace ON		**A, B, C & D**
Select Math Setup		
For Math	:	**Use at most 5000 points**
Redefine A, B, C, D		**Channel 1, Channel 2, Channel 3 & Channel 4**
Use Math ?	:	**Yes**
Math Type	:	**Average**
Avg. Type	:	**Summed**
For	:	**10 sweeps**

- Set the output of the LeCroy LW420 or equivalent audio frequency signal generator to **1 kHz.**

- Connect the output of the generator to Channel 1 through a 50 Ohm coaxial cable and adjust the sine wave output amplitude to get **8 divisions peak to peak .**

- Select MEASURE TOOLS : **Cursors, Time, Absolute**

- Use the "cursor position" knob, to move the **Time marker** at 0.0 µs

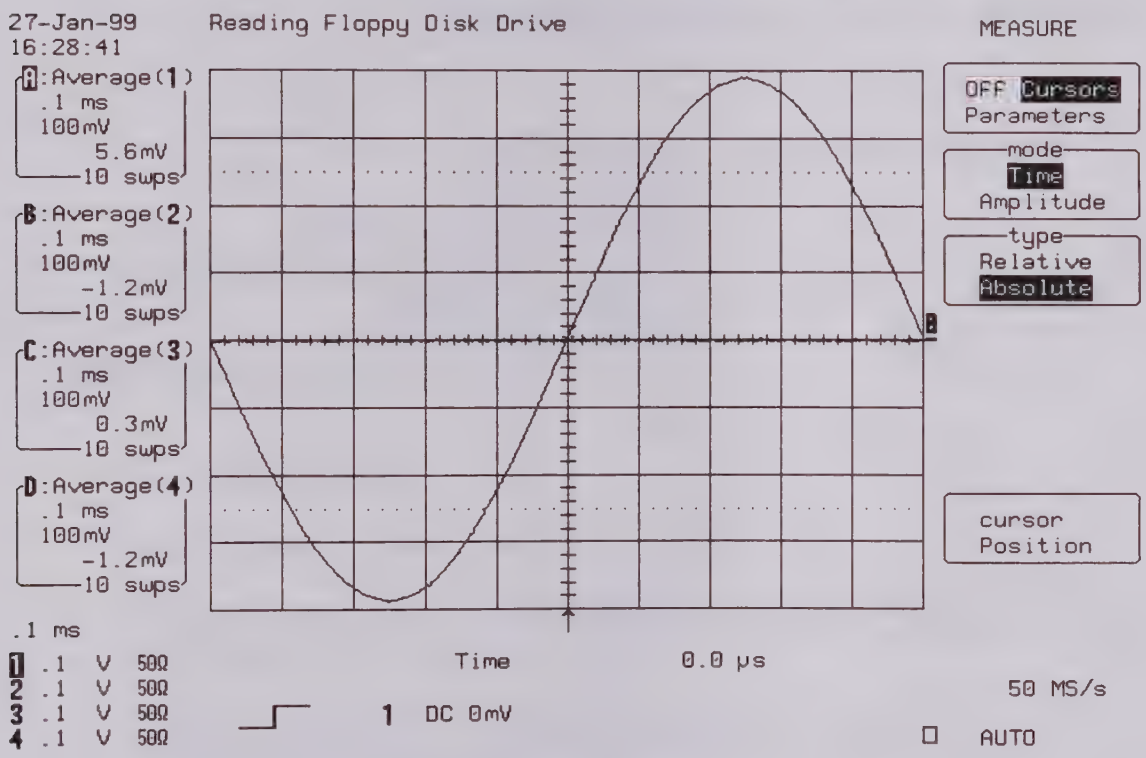

- Press **Clear Sweeps**,

- Acquire 10 sweeps and record in Table 11 the **level** readout displayed below 100 mV in the icon **1,** at top left.

- Compare the test results to the corresponding limit in the test record.

- Set Trigger Slope 1 : **Neg**

- Acquire 10 sweeps and record in Table 11 the **level** readout displayed below

100 mV in the icon **1,** at top left.

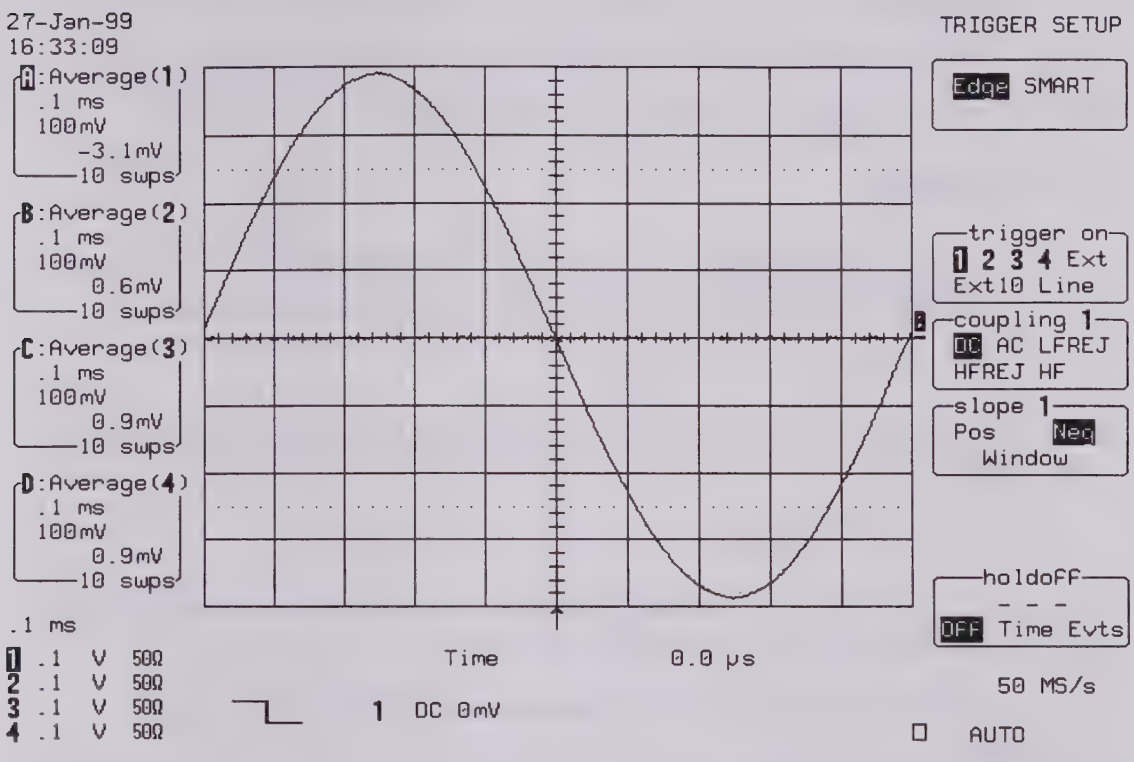

b. HFREJ Coupling

- Set Coupling : **HFREJ**
- Acquire 10 sweeps and record in Table 12 the **level** readout displayed below 100 mV in the icon **1,** at top left.
- Set Trigger Slope 1 : **Pos**
- Acquire 10 sweeps and record in Table 12 the **level** readout displayed below 100 mV in the icon **1,** at top left.
- Repeat steps 5.10.1.a. and 5.10.1.b. for all input channels, substituting channel controls (DC, HFREJ, Pos, Neg) and input connector.
  Recall **LTxxxP028.PNL** for Channel 2, **LTxxxP029.PNL** for Channel 3, **LTxxxP030.PNL** for Channel 4, or select **Trigger on** the Channel under test.
  The **Trigger level** is displayed in either the icon **2**, **3** or **4**

- Record the measurements in Table 11 & 12 and compare the test results to the corresponding limits in the test record.

5.10.2 Channel Trigger at +3 Divisions Threshold

a. DC Coupling

- Recall **LTxxxP031.PNL** or configure the DSO as shown in 5.10.1.a and for each Channel make the following change :

  Set Trigger level : **DC +300 mV**

- Connect the output of the generator to Channel 1 through a 50 Ohm coaxial cable.

- Press **Clear Sweeps**,

- Acquire 10 sweeps and record in Table 11 the **level** readout displayed below 100 mV in the icon **1,** at top left.

- Compare the test results to the corresponding limit in the test record.

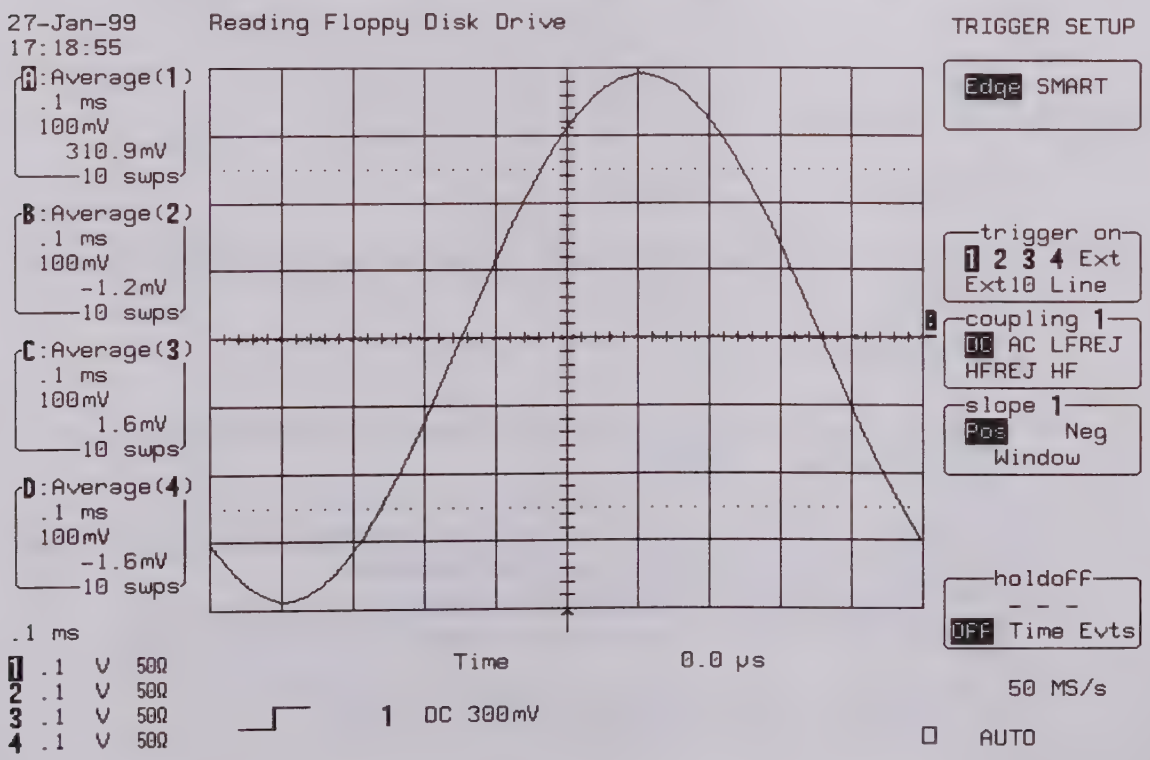

- Set Trigger Slope 1 : **Neg**

- Acquire 10 sweeps and record in Table 11 the **level** readout displayed below 100 mV in the icon **1,** at top left.

b. HFREJ Coupling

- Set Coupling : **HFREJ**

- Acquire 10 sweeps and record in Table 12 the **level** readout displayed below 100 mV in the icon **1,** at top left.

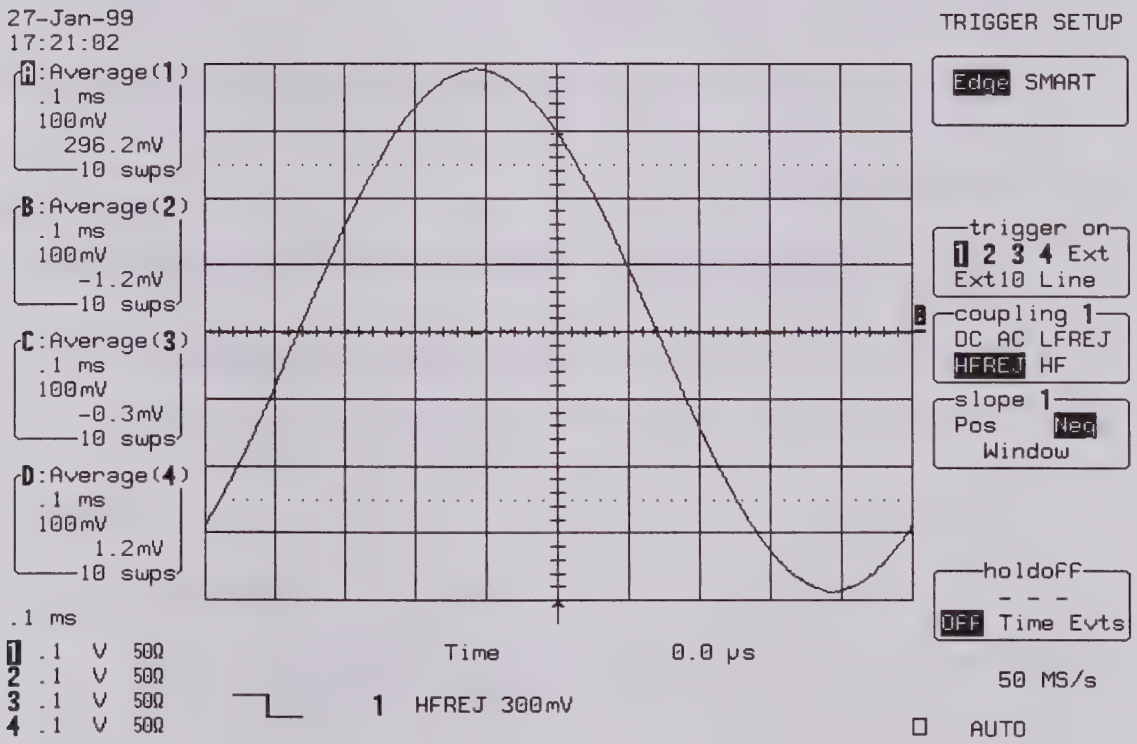

- Set Trigger Slope 1 : **Pos**

- Acquire 10 sweeps and record in Table 12 the **level** readout displayed below 100 mV in the icon **1,** at top left.

- Repeat steps 5.10.2.a. and 5.10.2.b. for all input channels, substituting channel controls (DC, HFREJ, Pos, Neg) and input connector.
  Recall **LTxxxP032.PNL** for Channel 2, **LTxxxP033.PNL** for Channel 3, **LTxxxP034.PNL** for Channel 4, or select **Trigger on** the Channel under test.
  The **Trigger level** is displayed in either the icon **2**, **3** or **4**

- Record the measurements in Table 11 & 12 and compare the test results to the corresponding limits in the test record.

5.10.3 Channel Trigger at –3 Divisions Threshold

a. DC Coupling

- Recall **LTxxxP035.PNL** or configure the DSO as shown in 5.10.1.a and for each channel make the following change :

  Set Trigger level : **DC –300 mV**

- Connect the output of the generator to Channel 1 through a 50 Ohm coaxial cable.

- Press **Clear Sweeps**,

- Acquire 10 sweeps and record in Table 11 the **level** readout displayed below 100 mV in the icon **1,** at top left.

- Compare the test results to the corresponding limit in the test record.

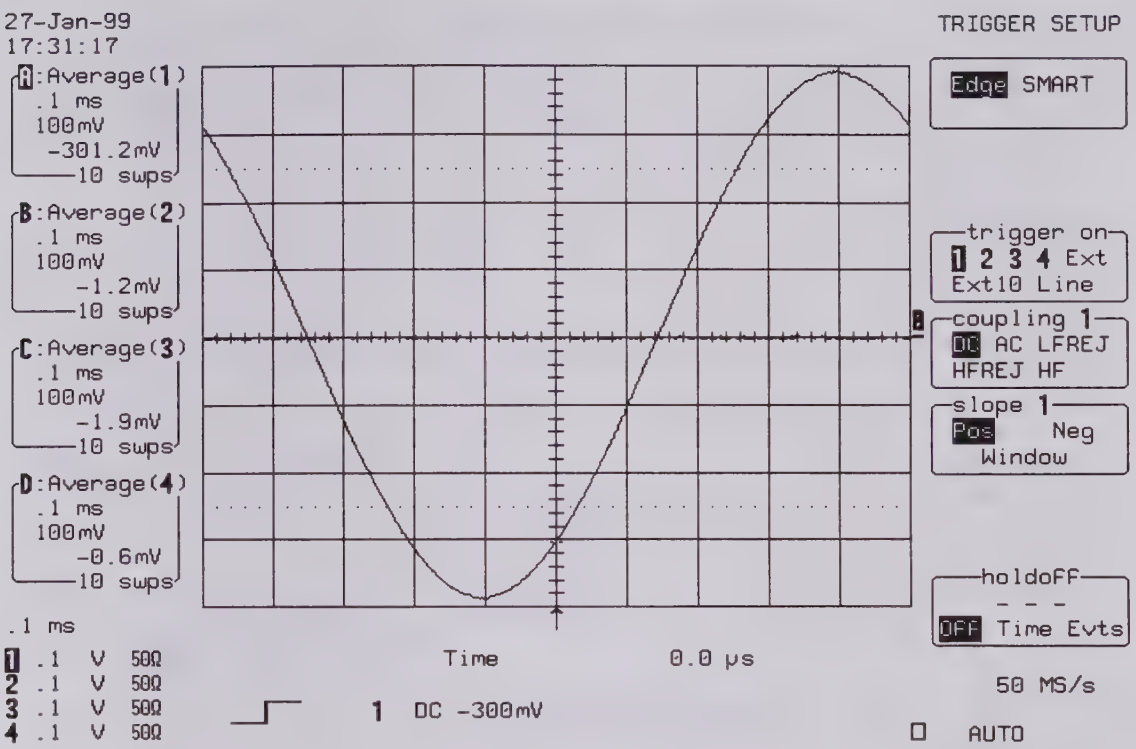

- Set Trigger Slope 1 : **Neg**

- Acquire 10 sweeps and record in Table 11 the **level** readout displayed below 100 mV in the icon **1,** at top left.

b. HFREJ Coupling

- Set Coupling : **HFREJ**

- Acquire 10 sweeps and record in Table 12 the **level** readout displayed below 100 mV in the icon **1,** at top left.

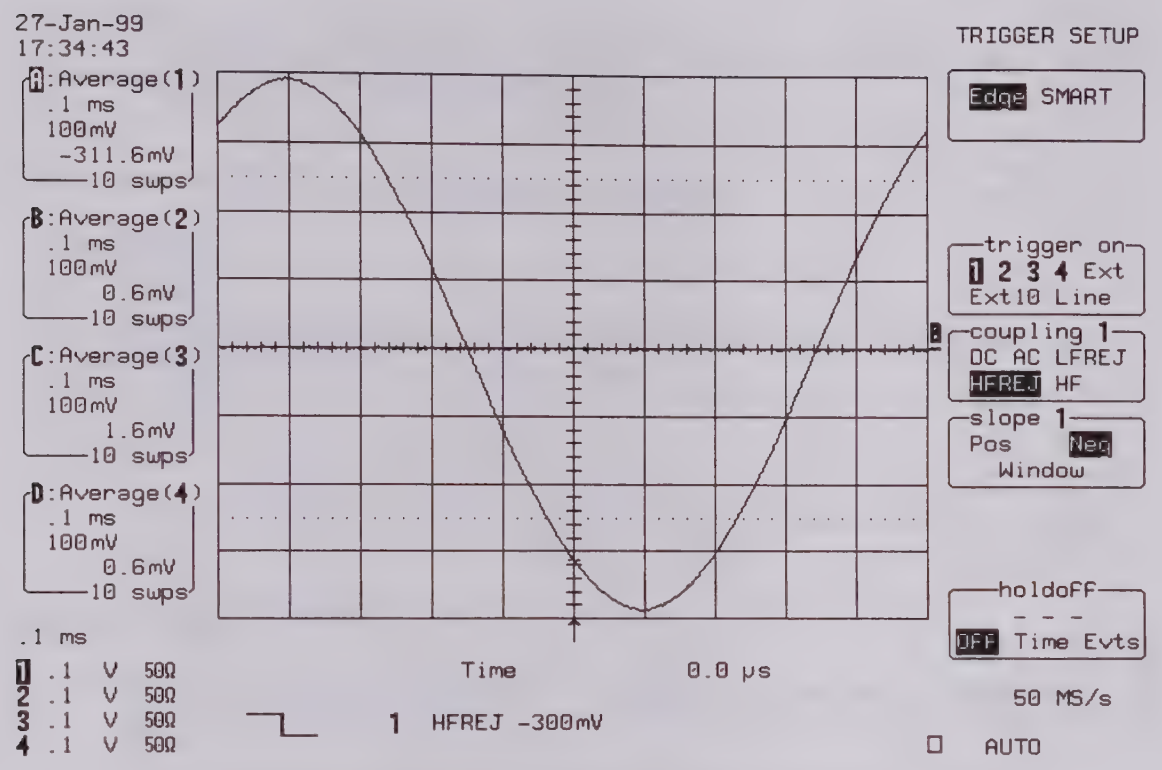

- Set Trigger Slope 1 : **Pos**

- Acquire 10 sweeps and record in Table 12 the **level** readout displayed below 100 mV in the icon **1,** at top left.

- Repeat steps 5.10.3.a. and 5.10.3.b. for all input channels, substituting channel controls (DC, HFREJ, Pos, Neg) and input connector.
  Recall **LTxxxP036.PNL** for Channel 2, **LTxxxP037.PNL** for Channel 3, **LTxxxP038.PNL** for Channel 4, or select **Trigger on** the Channel under test.
  The **Trigger level** is displayed in either the icon **2**, **3** or **4**

- Record the measurements in Table 11 & 12 and compare the test results to the corresponding limits in the test record.

5.10.4 External Trigger at 0 Division Threshold

a. DC Coupling

- Recall **LTxxxP039.PNL** or configure the DSO :

Panel Setups	:	**Recall FROM DEFAULT SETUP**
Channel Trace ON		**Channel 2**
Input Coupling	:	**DC 50Ω**
Input gain	:	**100 mV/div.**
Input offset	:	**0 mV**
Trigger setup	:	**Edge**
Trigger on	:	**Ext**
Slope Ext	:	**Pos**
Coupling Ext	:	**DC**
Set Trigger level	:	**0.0 mV**
External	:	**DC 1MΩ**
Mode	:	**Auto**
Pre-Trigger Delay	:	**50 %**
Time base	:	**0.1 msec/div.**
Record up to	:	**50 k samples**
Channel Trace OFF		**Channel 2**
Zoom+Math Trace ON		**B**
Select Math Setup		
For Math	:	**Use at most 5000 points**
Redefine B	:	**Channel 2**
Use Math ?	:	**Yes**
Math Type	:	**Average**
Avg. Type	:	**Summed**
For	:	**10 sweeps**

- Connect the test equipment as shown in Figure 5-7.
- Set the output of the LeCroy LW420 or equivalent audio frequency signal generator to **1 kHz.**
- Adjust the sine wave output amplitude to get **8 divisions peak to peak .**
- Select MEASURE TOOLS : **Cursors, Time, Absolute**
- Use the "cursor position" knob, to move the **Time marker** at 0.0 μs

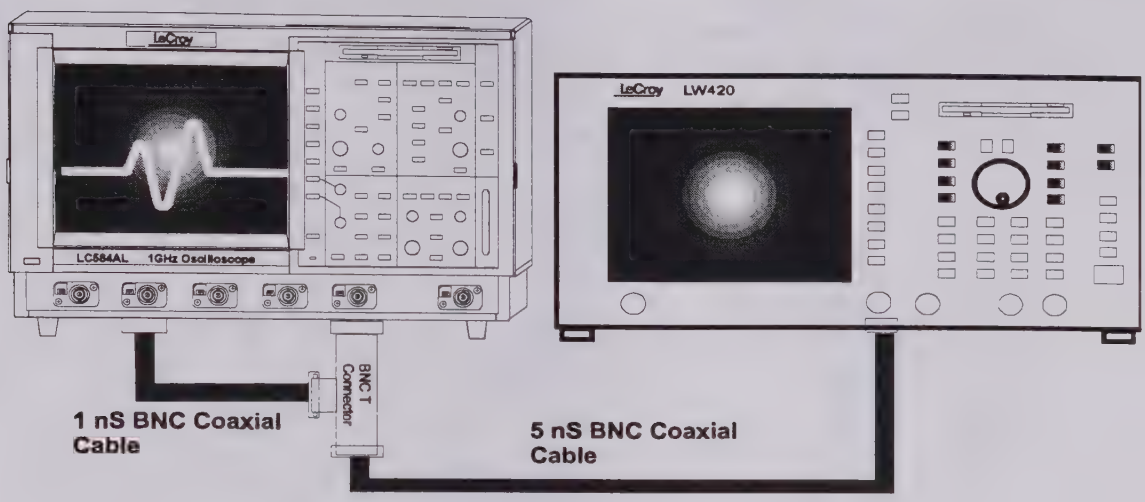

Figure 5-7 : External Trigger Equipment Setup

- Press **Clear Sweeps**
- Acquire 10 sweeps and record in Table 13 the **level** readout displayed below 100 mV in the icon **2**, at top left.

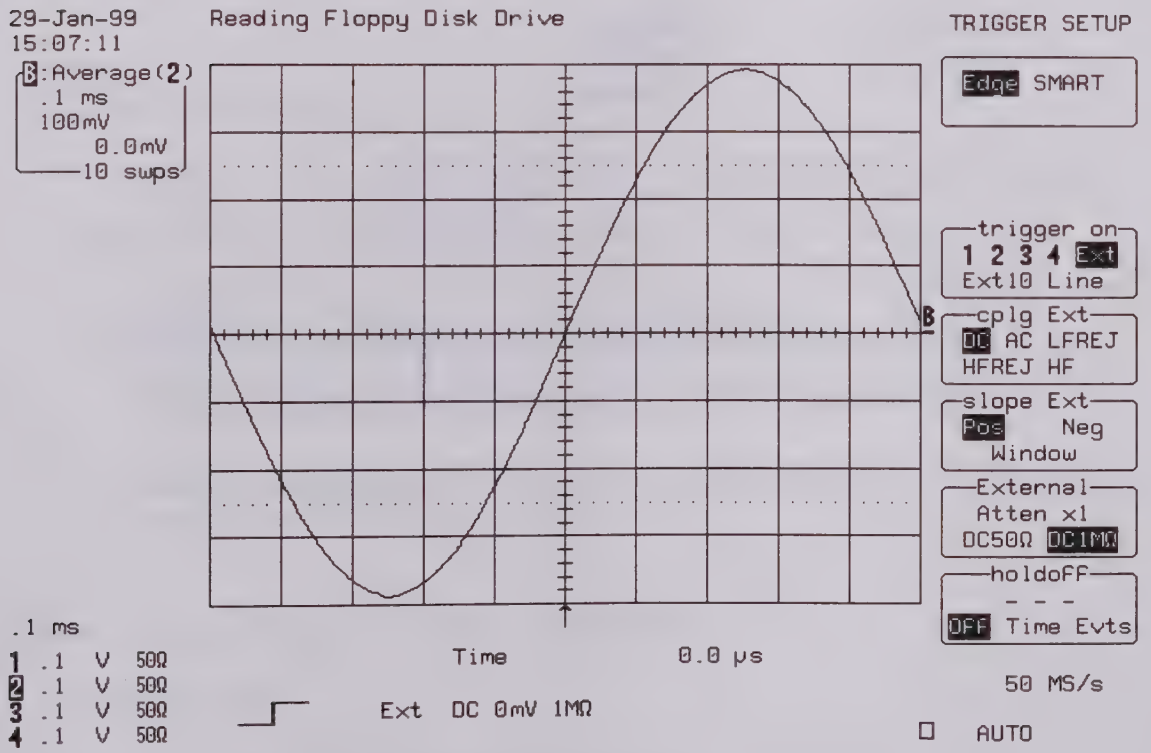

- Set Trigger Slope Ext : **Neg**

- Acquire 10 sweeps and record in Table 13 the **level** readout displayed below 100 mV in the icon **2,** at top left.

- Compare the test results to the corresponding limit in the test record.

b. HFREJ Coupling

- Set Coupling Ext : **HFREJ**

- Acquire 10 sweeps and record in Table 13 the **level** readout displayed below 100 mV in the icon **2,** at top left.

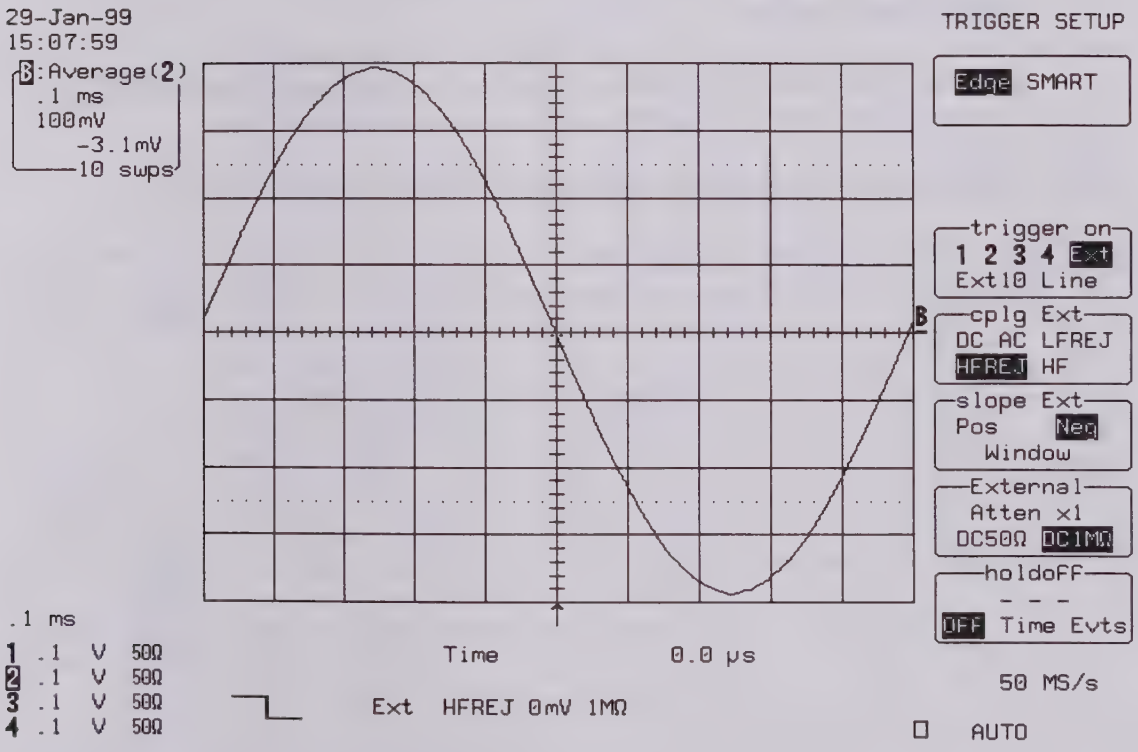

- Set Trigger Slope Ext : **Pos**

- Acquire 10 sweeps and record in Table 13 the **level** readout displayed below 100 mV in the icon **2,** at top left.

- Compare the test results to the corresponding limit in the test record.

5.10.5 External Trigger at +3 Divisions Threshold

a. DC Coupling

- Recall **LTxxxP040.PNL** or configure the DSO as shown in 5.10.4.a and make the following change :

  Set Ext Trigger level : **DC +300 mV**

- Connect the test equipment as shown in Figure 5-7.
- Press **Clear Sweeps**,
- Acquire 10 sweeps and record in Table 13 the **level** readout displayed below 100 mV in the icon **2,** at top left.
- Compare the test results to the corresponding limit in the test record.

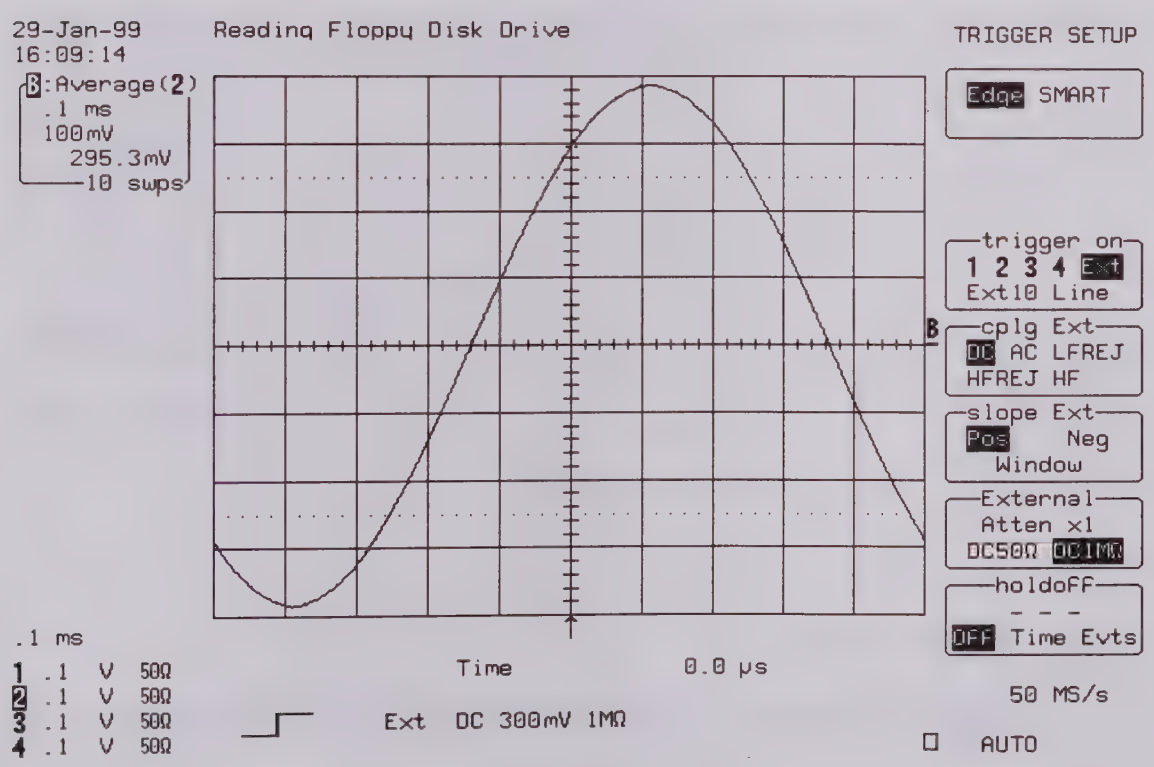

- Set Trigger Slope Ext : **Neg**

- Acquire 10 sweeps and record in Table 13 the **level** readout displayed below 100 mV in the icon **2,** at top left.

b. HFREJ Coupling

- Set Ext Coupling : **HFREJ**

- Acquire 10 sweeps and record in Table 13 the **level** readout displayed below 100 mV in the icon **2,** at top left.

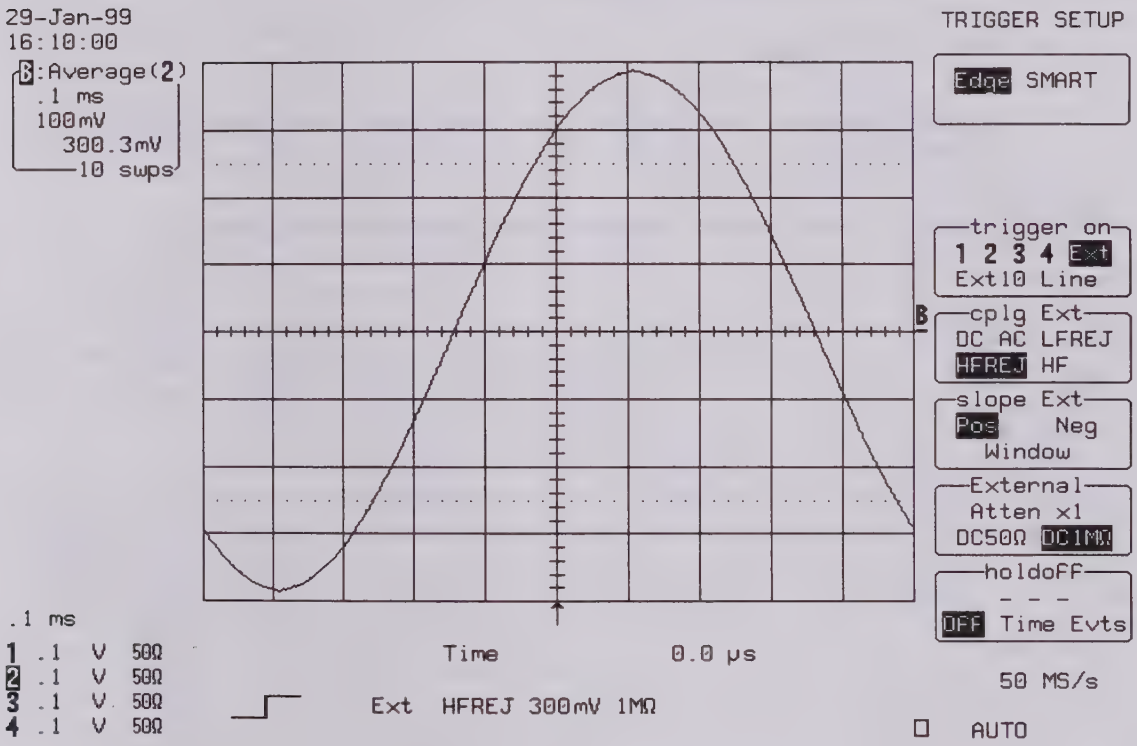

- Set Trigger Slope Ext : **Pos**

- Acquire 10 sweeps and record in Table 13 the **level** readout displayed below 100 mV in the icon **2,** at top left.

5.10.6 External Trigger at –3 Divisions Threshold

a. DC Coupling

- Recall **LTxxxP041.PNL** or configure the DSO as shown in 5.10.4.a and make the following change :

  Set Ext Trigger level : **DC –300 mV**

- Connect the test equipment as shown in Figure 5-7.
- Press **Clear Sweeps**.
- Acquire 10 sweeps and record in Table 13 the **level** readout displayed below 100 mV in the icon **2,** at top left.
- Compare the test results to the corresponding limit in the test record.

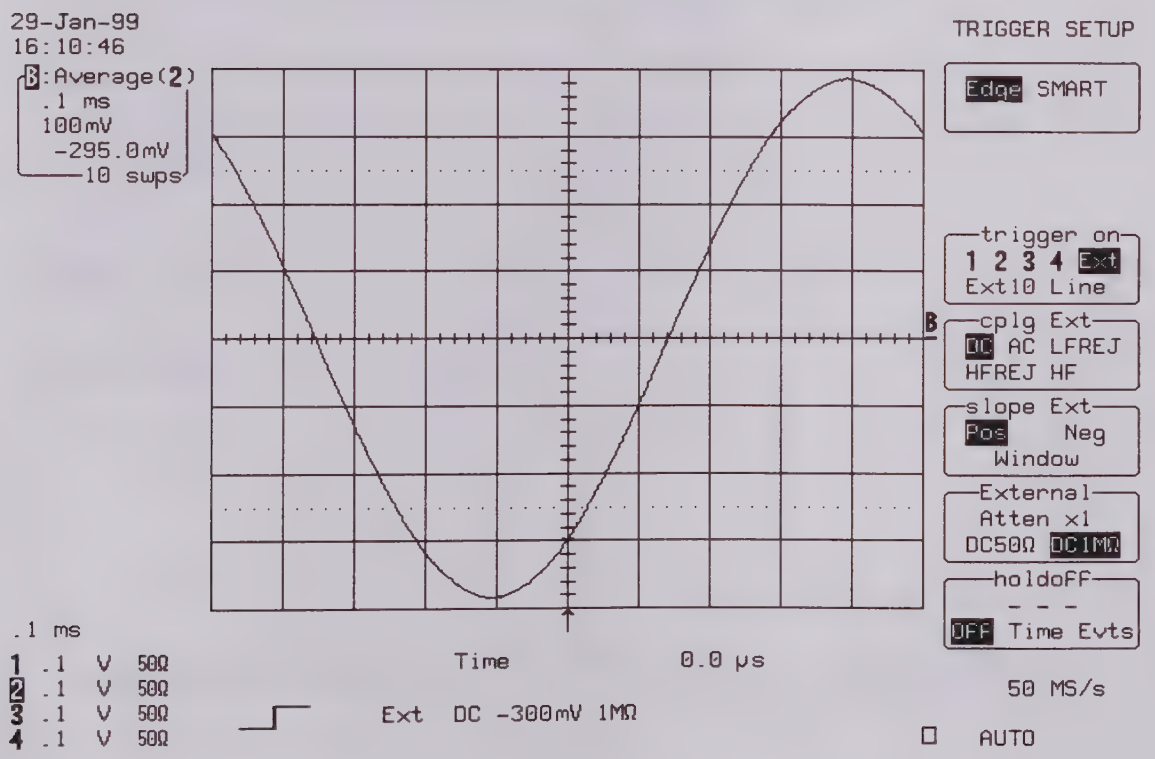

- Set Trigger Slope Ext : **Neg**
- Acquire 10 sweeps and record in Table 13 the **level** readout displayed below 100 mV in the icon **2,** at top left.

b. HFREJ Coupling

- Set Ext Coupling : **HFREJ**
- Acquire 10 sweeps and record in Table 13 the **level** readout displayed below 100 mV in the icon **2,** at top left.
- Compare the test results to the corresponding limit in the test record.

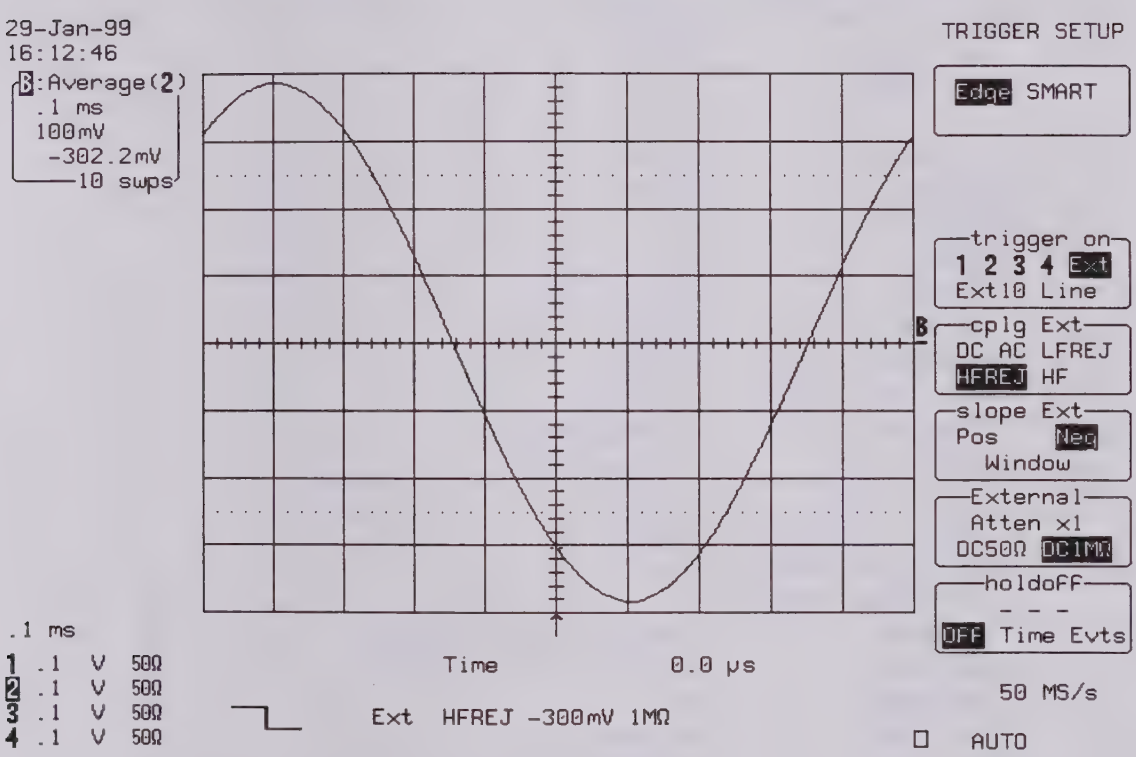

- Set Trigger Slope Ext : **Pos**
- Acquire 10 sweeps and record in Table 13 the **level** readout displayed below 100 mV in the icon **2,** at top left.
- Compare the test results to the corresponding limit in the test record.

5.10.7 External/10 Trigger at 0 Division Threshold

a. DC Coupling

- Recall **LTxxxP042.PNL** or configure the DSO :

Panel Setups	:	**Recall FROM DEFAULT SETUP**
Channel Trace ON		**Channel 2**
Input Coupling	:	**DC 1MΩ**
Input gain	:	**1V/div**
Input offset	:	**0 mV**
Trigger setup	:	**Edge**
Trigger on	:	**Ext/10**
Slope Ext/10	:	**Pos**
Mode	:	**Auto**
Coupling	:	**DC**
Set Trigger level	:	**0.0 mV**
External	:	**DC 1MΩ**
Pre-Trigger Delay	:	**50 %**
Time base	:	**0.1 msec/div.**
Record up to	:	**50 k samples**
Channel Trace OFF		**Channel 2**
Zoom+Math Trace ON		**B**
Select Math Setup		
For Math	:	**Use at most 5000 points**
Redefine B	:	**Channel 2**
Use Math ?	:	**Yes**
Math Type	:	**Average**
Avg. Type	:	**Summed**
For	:	**10 sweeps**

- Connect the test equipment as shown in Figure 5-7.
- Set the output of the LeCroy LW420 or equivalent audio frequency signal generator to **1 kHz.**
- Adjust the sine wave output amplitude to get **8 divisions peak to peak .**
- Select MEASURE TOOLS : **Cursors, Time, Absolute**
- Use the "cursor position" knob, to move the **Time marker** at 0.0 μs

- Press **Clear Sweeps**
- Acquire 10 sweeps and record in Table 13 the **level** readout displayed below 100 mV in the icon **2**, at top left.

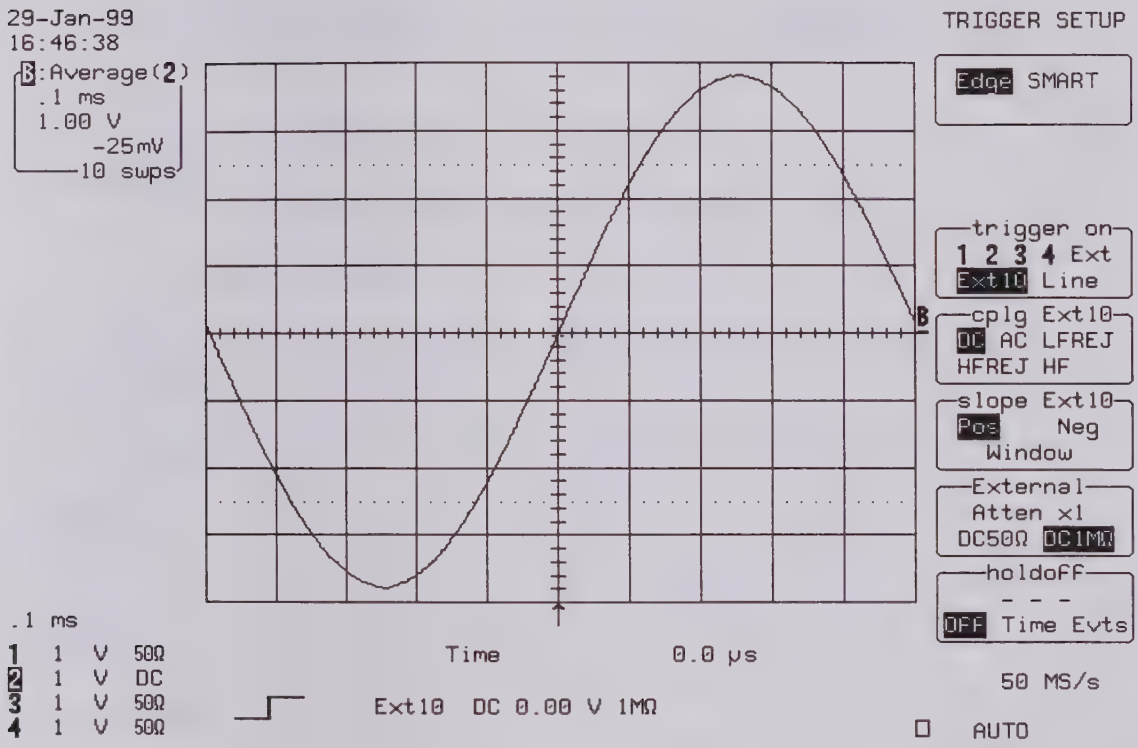

- Set Trigger Slope Ext/10 : **Neg**
- Acquire 10 sweeps and record in Table 13 the **level** readout displayed below 100 mV in the icon **2**, at top left.
- Compare the test results to the corresponding limit in the test record.

b. HFREJ Coupling

- Set Coupling Ext/10 : **HFREJ**
- Acquire 10 sweeps and record in Table 13 the **level** readout displayed below 100 mV in the icon **2**, at top left.

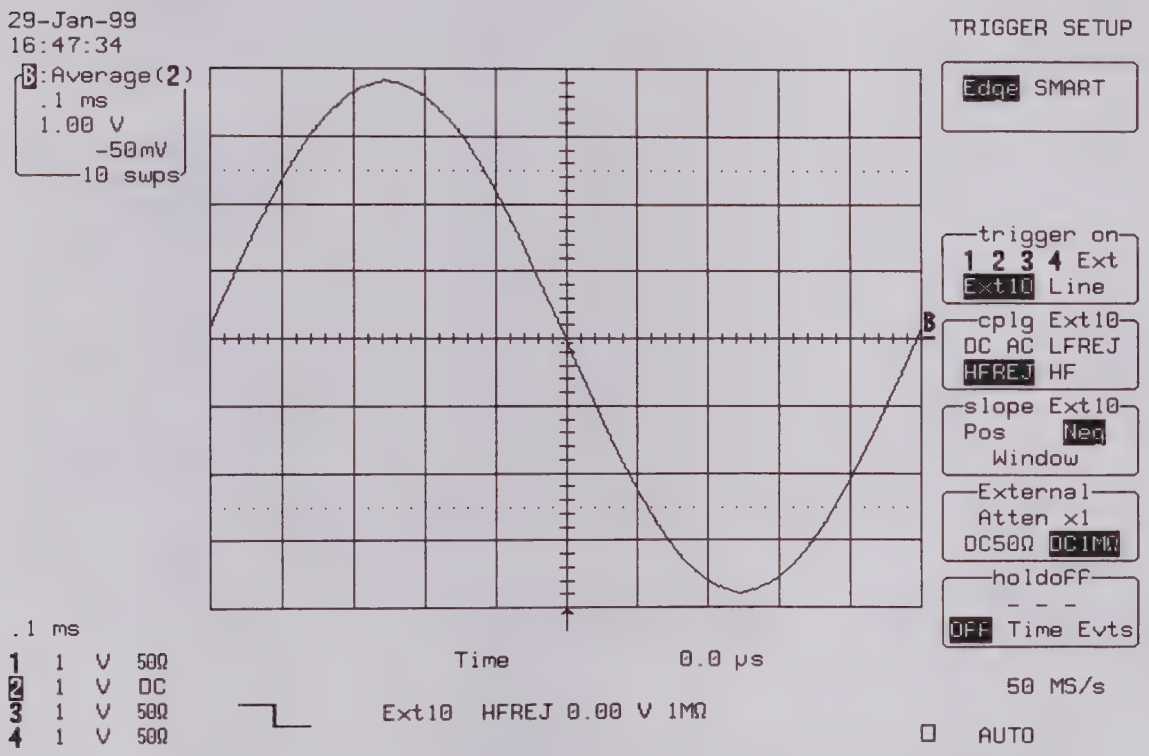

- Set Trigger Slope Ext/10 : **Pos**
- Acquire 10 sweeps and record in Table 13 the **level** readout displayed below 100 mV in the icon **2**, at top left.
- Compare the test results to the corresponding limit in the test record.

5.10.8 External/10 Trigger at +3 Divisions Threshold

a. DC Coupling

- Recall **LTxxxP043.PNL** or configure the DSO as shown in 5.10.7.a and make the following change :

  Set Ext/10 Trigger level : **DC +3 V**

- Connect the test equipment as shown in Figure 5-7.
- Press **Clear Sweeps**,
- Acquire 10 sweeps and record in Table 13 the **level** readout displayed below 100 mV in the icon **2,** at top left.
- Compare the test results to the corresponding limit in the test record.

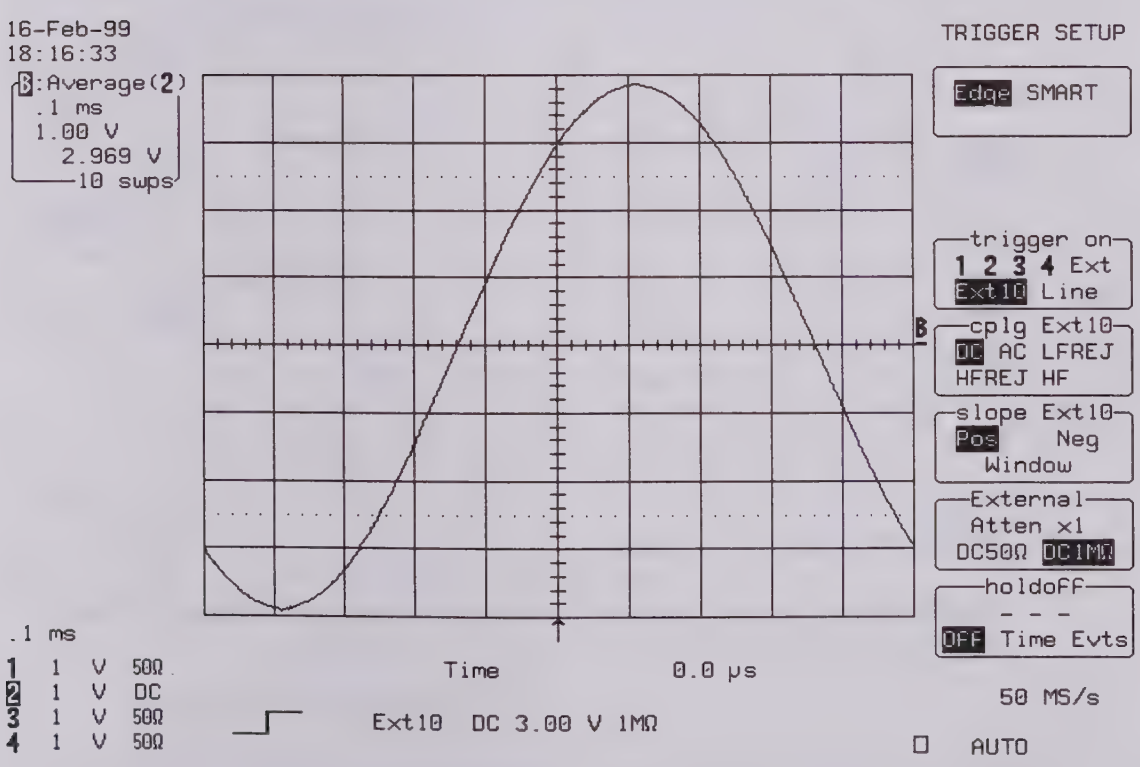

- Set Trigger Slope Ext/10: **Neg**

- Acquire 10 sweeps and record in Table 13 the **level** readout displayed below 100 mV in the icon **2,** at top left.

b. HFREJ Coupling

- Set Ext/10 Coupling: **HFREJ**

- Acquire 10 sweeps and record in Table 13 the **level** readout displayed below 100 mV in the icon **2,** at top left.

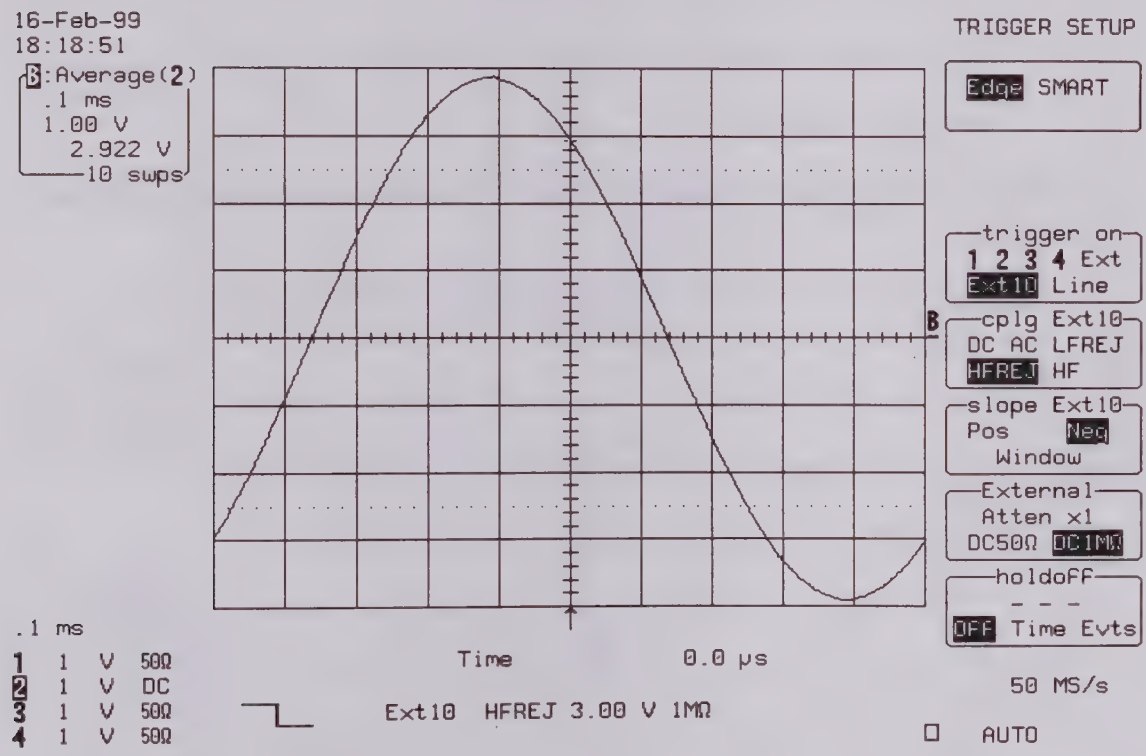

- Set Trigger Slope Ext/10 : **Pos**

- Acquire 10 sweeps and record in Table 13 the **level** readout displayed below 100 mV in the icon **2,** at top left.

5.10.9 External/10 Trigger at –3 Divisions Threshold

a. DC Coupling

- Recall **LTxxxP044.PNL** or configure the DSO as shown in 5.10.7.a and make the following change :

  Set Ext/10 Trigger level : **DC –3 V**

- Connect the test equipment as shown in Figure 5-7.
- Press **Clear Sweeps**.
- Acquire 10 sweeps and record in Table 13 the **level** readout displayed below 100 mV in the icon **2,** at top left.
- Compare the test results to the corresponding limit in the test record.

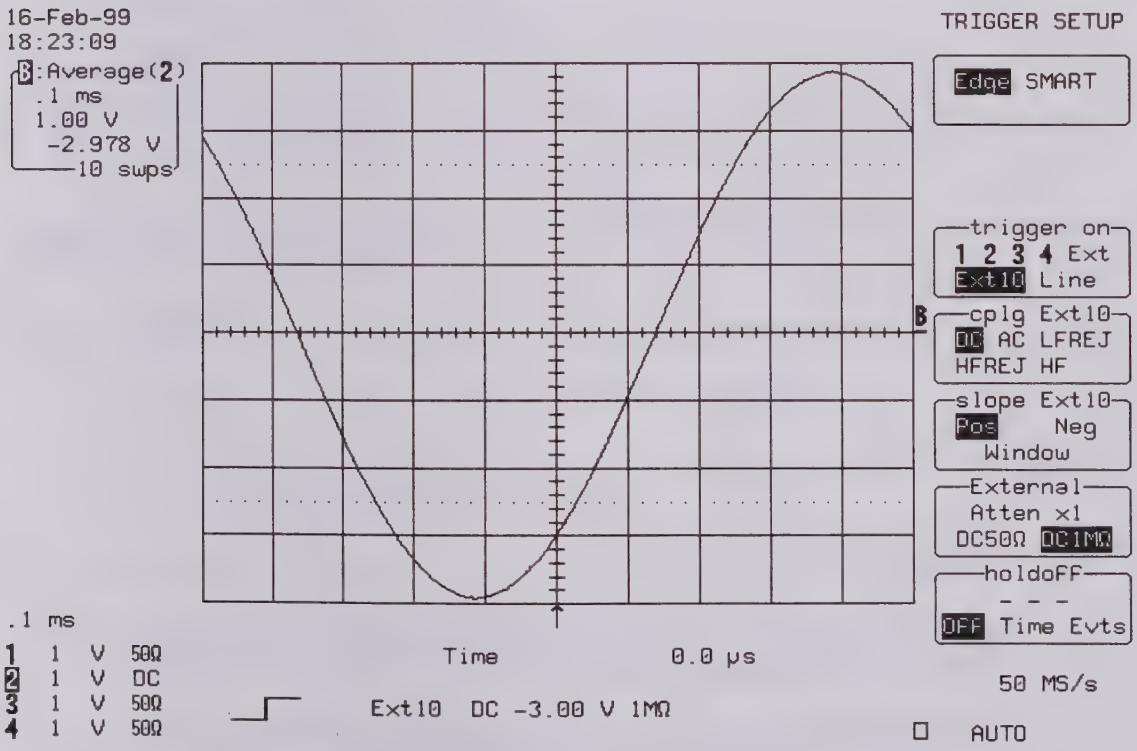

- Set Trigger Slope Ext/10: **Neg**
- Acquire 10 sweeps and record in Table 13 the **level** readout displayed below 100 mV in the icon **2,** at top left.

b. HFREJ Coupling

- Set Ext/10 Coupling: **HFREJ**
- Acquire 10 sweeps and record in Table 13 the **level** readout displayed below 100 mV in the icon **2**, at top left.
- Compare the test results to the corresponding limit in the test record.

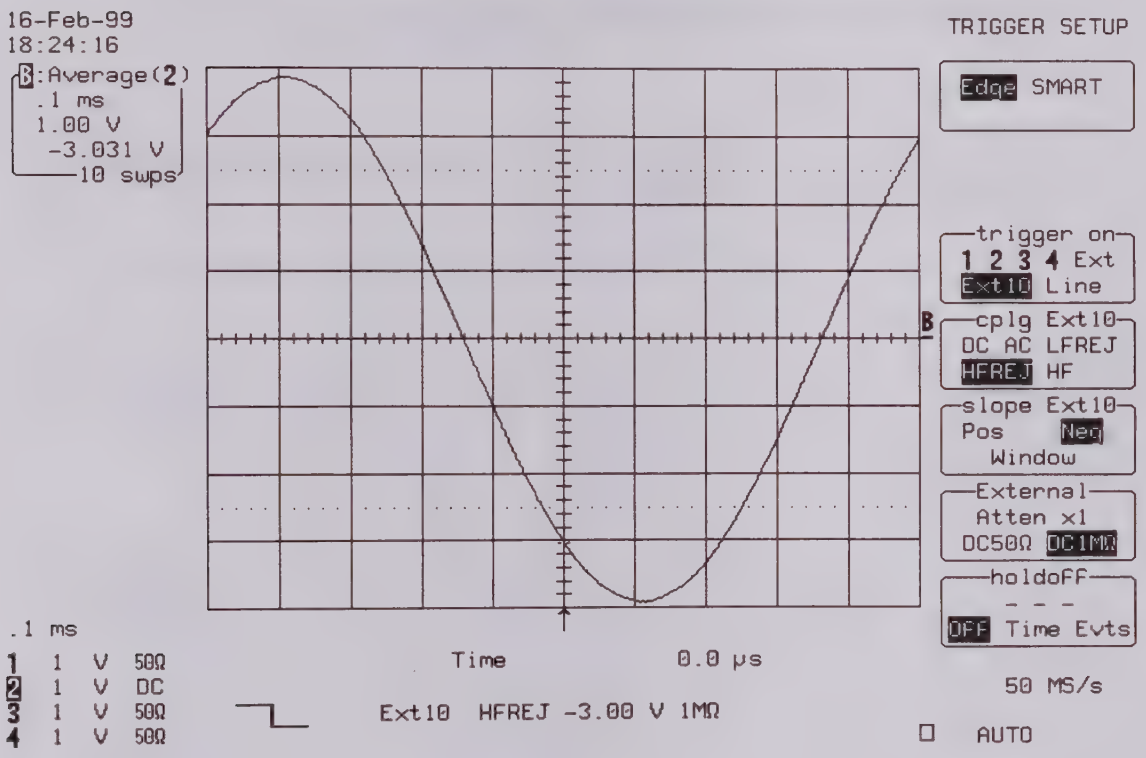

- Set Trigger Slope Ext/10 : **Pos**
- Acquire 10 sweeps and record in Table 13 the **level** readout displayed below 100 mV in the icon **2**, at top left.
- Compare the test results to the corresponding limit in the test record.

5.11 Smart Trigger

5.11.1 Trigger on Pulse Width 10 nsec

a. Pulse Width < 10 nsec

- Recall **LTxxxP045.PNL** or configure the DSO

Panel Setups	:	**Recall FROM DEFAULT SETUP**
Channels trace ON		**Channel 1**
Input coupling	:	**DC 50Ω**
Input gain	:	**.5 V/div.**
Input offset	:	**0 mV**
Trigger setup	:	**Smart**
Setup Smart Trigger		**Glitch**
Trigger on	:	**1**
At the end of	:	**Neg.**
Width < 10 nsec	:	**On**
Width > 10 nsec	:	**Off**
Trigger mode	:	**Norm**
Time base	:	**5 nsec/div.**

- Connect the **RF output** of the HP8648B generator through a 5ns 50 Ohm BNC coaxial cable into Channel 1.

- Set the generator frequency to **100 MHz**. Adjust the generator output amplitude to get **5 divisions peak to peak .**

- Check that the scope Triggers. Record the test result in Table 14.

- Set Width < 10 nsec **Off** and Width > 10 nsec **ON**

- Check that the scope **doesn't trigger :** slow trigger and no flashes in box next to normal. Record the test result in Table 14.

b. Pulse Width > 10 nsec

- Set the generator frequency to **40 MHz**.
- Set Width < 10 nsec **Off** and Width > 10 nsec **ON**

- Check that the scope Triggers. Record the test result in Table 14.

- Set Width < 10 nsec **On** and Width > 10 nsec **Off**

- Check that the scope **doesn't trigger :** slow trigger and no flashes in box. Record the test result in Table 14.

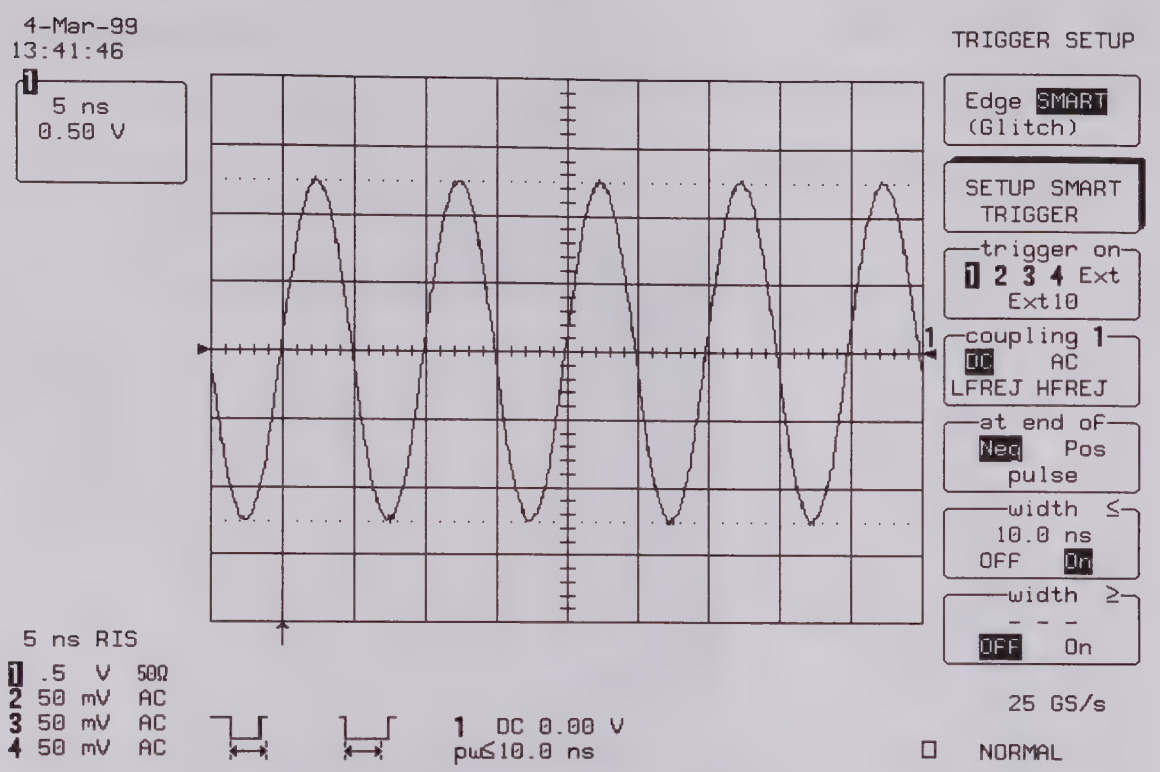
4-Mar-99
13:41:46
1
5 ns
0.50 V
TRIGGER SETUP
Edge SMART
(Glitch)
SETUP SMART
TRIGGER
trigger on
1 2 3 4 Ext
Ext10
coupling 1
DC AC
LFREJ HFREJ
at end of
Neg Pos
pulse
width ≤
10.0 ns
OFF On
width ≥
- - -
OFF On
5 ns RIS
1 .5 V 50Ω
2 50 mV AC
3 50 mV AC
4 50 mV AC
1 DC 0.00 V
pw≤10.0 ns
25 GS/s
NORMAL

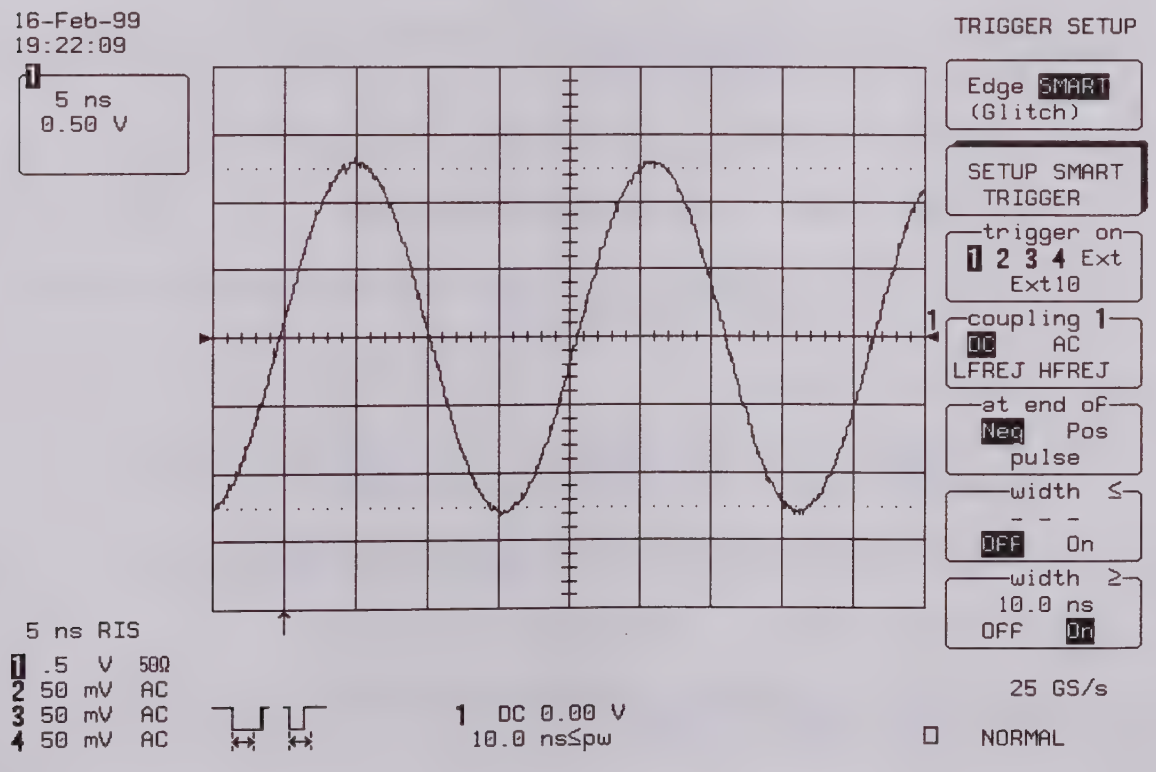
16-Feb-99
19:22:09
1
5 ns
0.50 V
TRIGGER SETUP
Edge SMART
(Glitch)
SETUP SMART
TRIGGER
trigger on
1 2 3 4 Ext
Ext10
coupling 1
DC AC
LFREJ HFREJ
at end of
Neg Pos
pulse
width ≤
- - -
OFF On
width ≥
10.0 ns
OFF On
5 ns RIS
1 .5 V 50Ω
2 50 mV AC
3 50 mV AC
4 50 mV AC
1 DC 0.00 V
10.0 ns≤pw
25 GS/s
NORMAL

5.11.2 Trigger on Pulse Width 100 nsec

a. Pulse Width < 100 nsec

- Recall **LTxxxP046.PNL** or configure the DSO as shown in 5.11.1.a and make the following changes :

  Width < 100 nsec : **On**

  Width > 100 nsec : **Off**

  Time base : **20 nsec/div.**

- Set the generator frequency to **10 MHz**.
- Check that the scope Triggers. Record the test result in Table 14.
- Set Width < 100 nsec **Off** and Width > 100 nsec **ON**
- Check that the scope **doesn't trigger :** slow trigger and no flashes in box next to normal. Record the test result in Table 14.

b. Pulse Width > 100 nsec

- Set the generator frequency to **4 MHz**.
- Time base : **50 nsec/div.**
- Set Width < 100 nsec **Off** and Width > 100 nsec **ON**
- Check that the scope Triggers. Record the test result in Table 14.
- Set Width < 100 nsec **On** and Width > 100 nsec **Off**
- Check that the scope **doesn't trigger :** slow trigger and no flashes in box. Record the test result in Table 14.

5.12 Time Base Accuracy

An external sine wave generator of **0.1 MHz** with a frequency accuracy better than 1 PPM is used.

Specifications & Test limit

Clock: accuracy: ≤ ±**0.001 % or** ≤ ±**10 PPM**

Procedure

- Recall **LTxxxP047.PNL** or configure the DSO

Panel Setups	:	**Recall FROM DEFAULT SETUP**
Channels trace ON		**Channel 1**
Input coupling	:	**DC 50Ω**
Input gain	:	**.1 V/div.**
Input offset	:	**0 mV**
Trigger setup	:	**Edge**
Trigger on	:	**1**
Coupling 1	:	**DC**
Slope 1	:	**Pos**
Level 1	:	**100 mV**
Trigger mode	:	**Norm**
Delay	:	**0 %**
Time base	:	**10 µsec/div.**
Channel use	:	**4**
Record up to	:	**50 k**

- Connect the **RF output** of the HP8648B generator through a 5ns 50 Ohm BNC coaxial cable into Channel 1.

- Set the generator frequency to **0.1 MHz**.

- Adjust the generator output amplitude to get **5 divisions peak to peak .**

- Store Channel 1 in Memory 1

- Recall **LTxxxP048.PNL** or make the following change :

- Set Post-trigger delay to **50.00 msec**

- Recall Memory **1 to A**
- Press : **MEASURE TOOLS**

- Measure : **Parameters**
- Mode : **Custom**
- Statistics : **Off**

- Change parameters

- On line 1 : **Delay of 1**
- On line 2 : **Delay of A**

- Check that the displayed Channel 1 trace is **aligned** with the sine wave from memory 1.

- This allows the accuracy of the time base clock to be checked **5000 periods** after the trigger point. A difference of ±**0.5** µ**sec** corresponds to ±**10 PPM**.

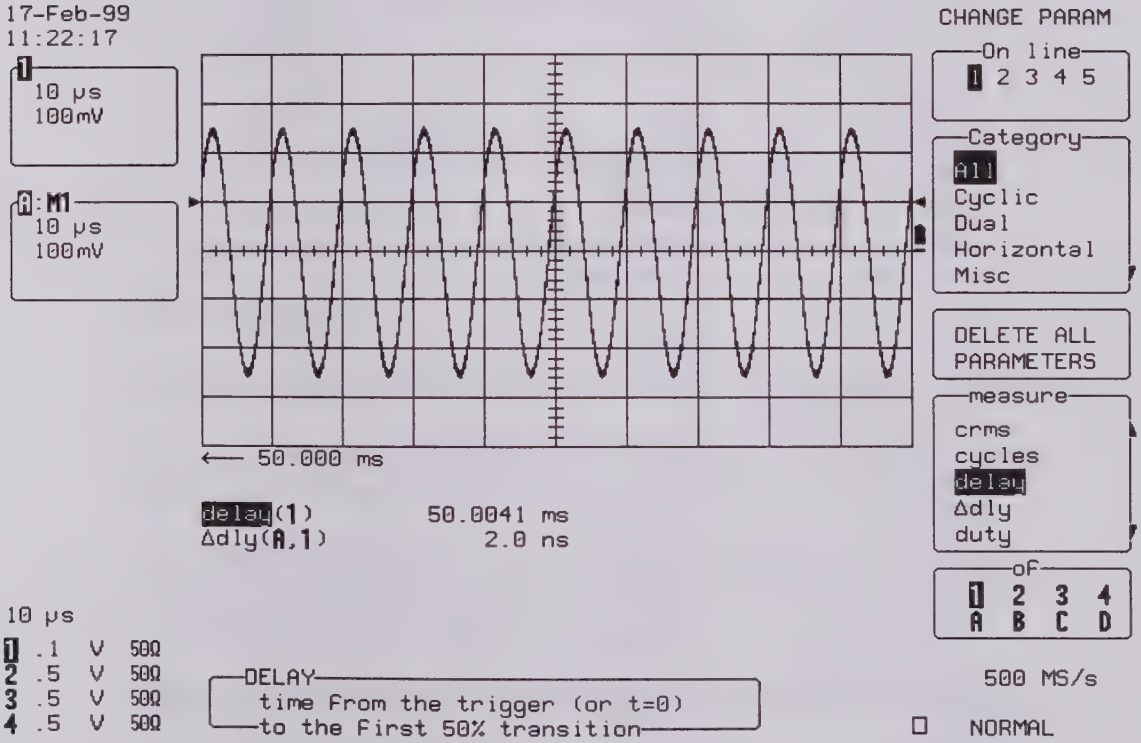

- Calculate the Difference **{[delay(A) - delay(1)]+ 50 msec}.**

- Record the test result in Table 15, and compare it to the limit in the test record.

5.13 Overshoot and Rise time (10 % - 90 %)

Test limit

Overshoot < 12%, rise time < 0.80 ns LT344/L, LT342/L, LT322
Overshoot < 10%, rise time < 1.9 ns LT224

Procedure

- Recall **LTxxxP049.PNL** or configure the DSO

Panel Setups	:	**Recall FROM DEFAULT SETUP**
Channels trace ON		**Channel 1**
Input coupling	:	**DC 50Ω** on all 4 Channels
Input gain	:	**0.1 V/div.** on all 4 Channels
Input offset	:	**–250 mV** on all 4 Channels
Trigger setup	:	**Edge**
Trigger on	:	**1**
Coupling 1	:	**DC**
Slope 1	:	**Pos**
Level 1	:	**250 mV**
Trigger mode	:	**Norm**
Delay	:	**30 % Pre-Trigger**
Time base	:	**1 nsec/div.**
Channel use	:	**4**
Record up to	:	**50 k**
Turn on trace	:	**A**
Select Math Setup		
For Math	:	**Use at most 1000 points**
Use Math ?	:	**Yes**
Math Type	:	**Average**
Avg Type	:	**Summed**
Of	:	**Channel 1**
Sweeps	:	**100**
Turn off trace	:	**Channel 1**
MEASURE TOOLS	:	**Parameters**
Mode	:	**Custom**
Statistics	:	**Off**
Change Parameters	:	
On displayed trace	:	**A**
On line 1	:	
Measure	:	**Over + of A**
On line 2	:	
Measure	:	**Rise of A**

- Connect the fast pulse generator 4969A and PB049 power adapter, or equivalent as shown in Figure 5-8.

- Set the 4969A frequency to **1 kHz**

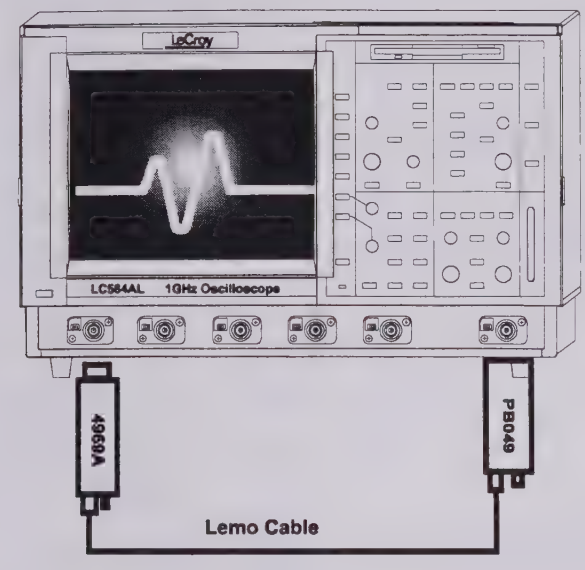

Figure 5-8: 50 Ω Overshoot & Rise time Equipment Setup

- Press **Clear Sweep**

- After 100 sweeps record **over+(A)** and **rise(A)** measurements in Table 16.

- Repeat the DC 50Ω Overshoot and Rise time test for the other channels, substituting channel controls and input connector.

- Recall **LTxxxP050.PNL** for Channel 2, **LTxxxP051.PNL** for Channel3 **LTxxxP052.PNL** for Channel 4, or configure the DSO as shown in 5.13 Procedure and make the necessary changes.

- Record the test results in Table 16, and compare the results to the limits.

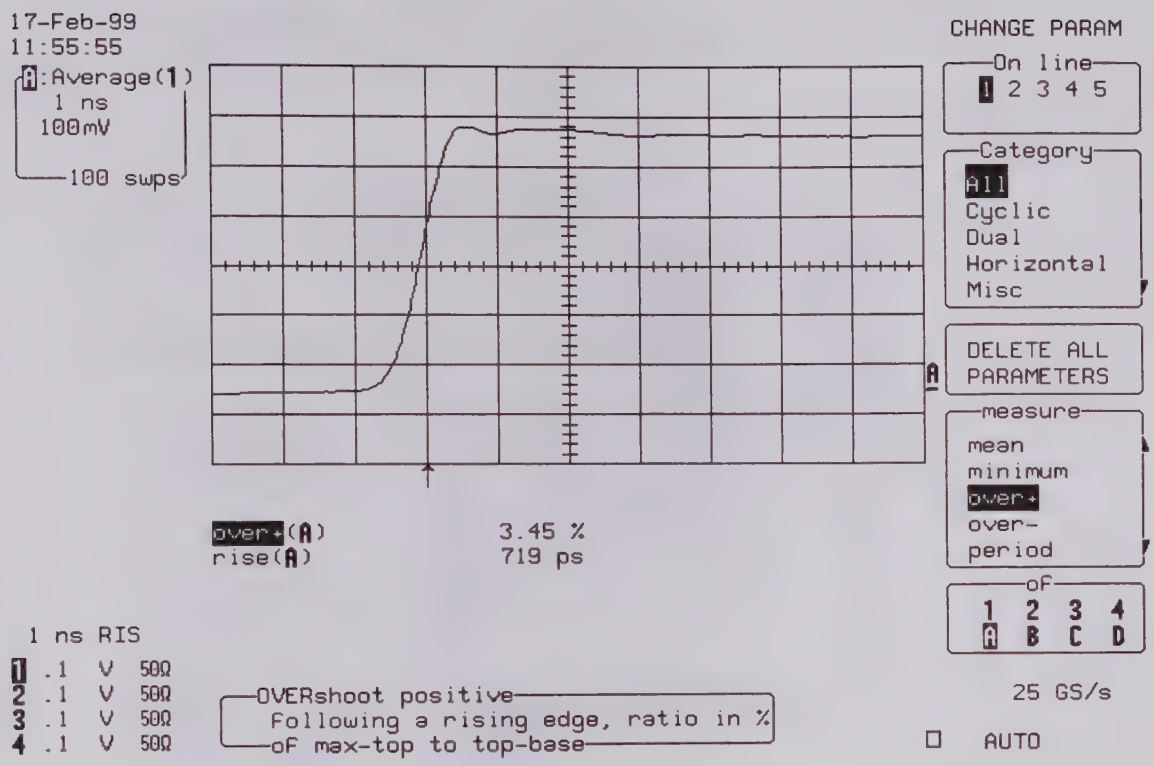
17-Feb-99
11:55:55
A:Average(1)
1 ns
100mV
100 swps
CHANGE PARAM
On line
1 2 3 4 5
Category
All
Cyclic
Dual
Horizontal
Misc
DELETE ALL PARAMETERS
measure
mean
minimum
over+
over-
period
of
1 2 3 4
A B C D
over+(A) 3.45 %
rise(A) 719 ps
1 ns RIS
1 .1 V 50Ω
2 .1 V 50Ω
3 .1 V 50Ω
4 .1 V 50Ω
OVERshoot positive
Following a rising edge, ratio in %
of max-top to top-base
25 GS/s
AUTO

5.14 Overload

Test limit

1 Watt into 50Ω : Overload Trip < 30 seconds

a. Channel Overload Trip

- Recall **LTxxxP053.PNL** or configure the DSO

Panel Setups	:	**Recall FROM DEFAULT SETUP**
Channels Trace ON		**Channel 1, Channel 2, Channel 3 & Channel 4**
Input coupling	:	**DC 50Ω** on all 4 Channels
Input gain	:	**1 V/div.** on all 4 Channels
Input offset	:	**–3.5 V** on all 4 Channels
Trigger setup	:	**Edge**
Trigger on	:	**1**
Coupling 1	:	**DC**
Slope 1	:	**Pos**
Level 1	:	**0 V**
Trigger mode	:	**Norm**
Delay	:	**zero**
Time base	:	**2 sec/div.**
Channel use	:	**4**
Record up to	:	**1000 samples**

- Set the output of the external **DC voltage source** to **+7.07 Volt** corresponding to 1 Watt into 50Ω.
- Connect the **DC voltage reference source** through a BNC cable into Channel1.
- When the channel **overload trips** press **Stop** to halt the acquisition.
- **Measure** on the screen the **overload trip time** and record it in Table 17.
- Repeat the above tests for Channel 2, Channel 3 and Channel 4 substituting the input connector.
- Record the test results in Table 17, and compare the results to the limits.
- For all Channel **clear the overload** by selecting DC 50Ω in the Coupling menu.
- Set Time base : **5 sec/div.**

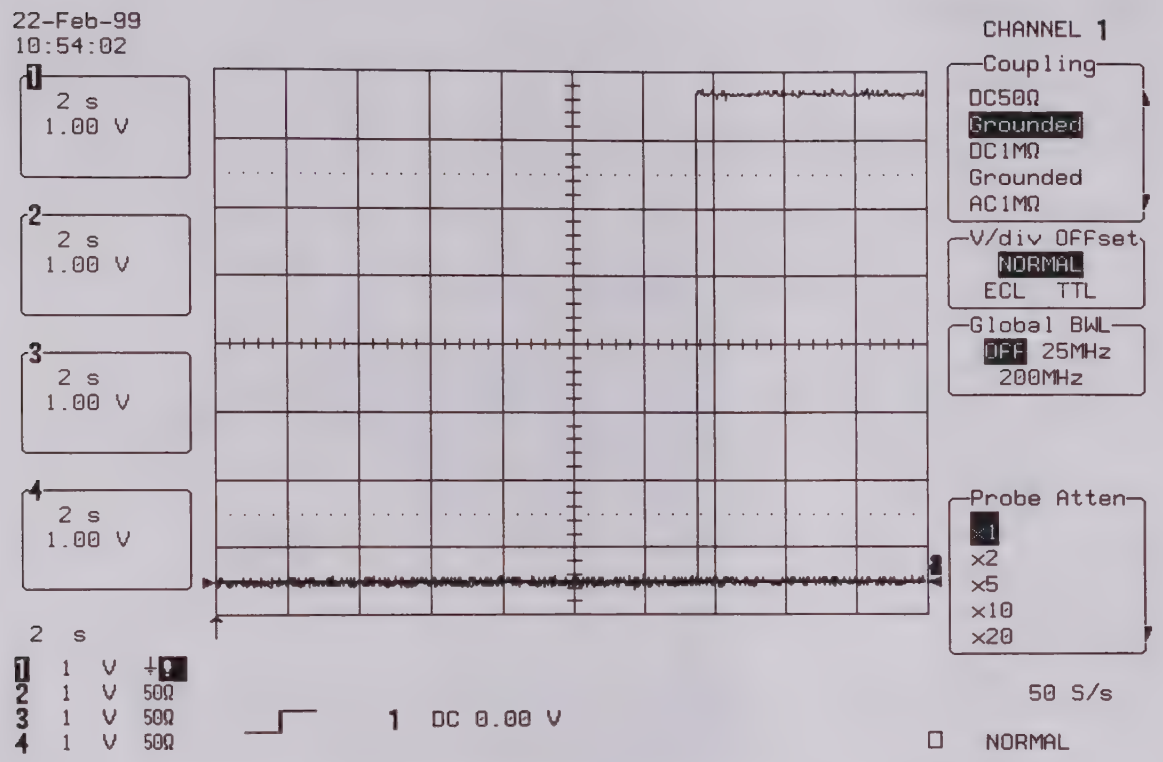

- Set the output of the external **DC voltage source** to **+5.00 Volt** corresponding to 0.5 Watt into 50Ω.

- For all channels check that the overload doesn't trip for at least **60** seconds. Record the test result in Table 17.

b. External Overload Trip

- Recall **LTxxxP054.PNL**, or configure the DSO as shown in 5.14.a and make the following changes.

Channel Trace ON	:	**Channel 2**
Input coupling	:	**DC 1MΩ**
Trigger on	:	**Ext**
Slope Ext	:	**Pos.**
External	:	**DC 50Ω**
Mode	:	**Norm**
Set Trigger level	:	**DC 0.0 mV**

- Connect the test equipment as shown in Figure 5-10.
- Set the output of the external **DC voltage source** to **+7.07 Volt**

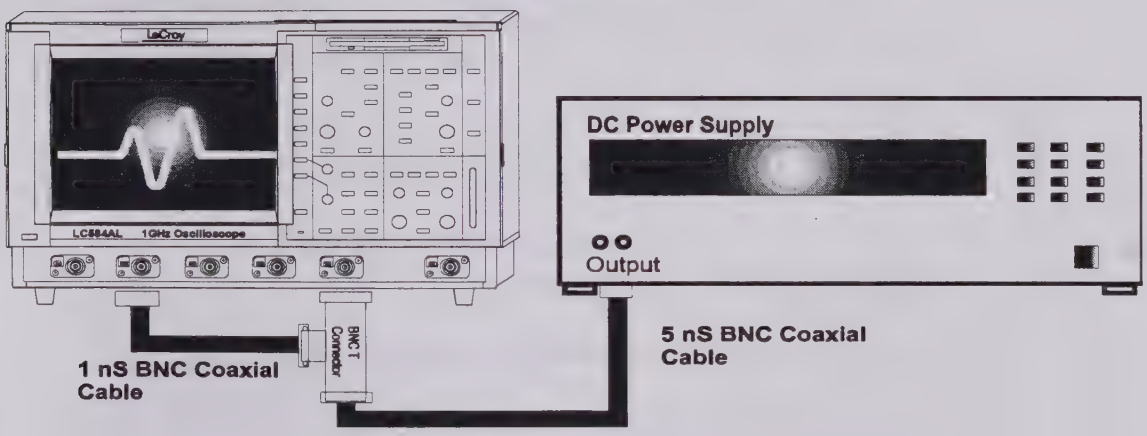

Figure 5-10 : External Overload Equipment Setup

- When the External **overload trips** press **Stop** to halt the acquisition.
- **Measure** on the screen the **overload trip time** and record it in Table 17.
- Press **clear overload** in the trigger setup menu.

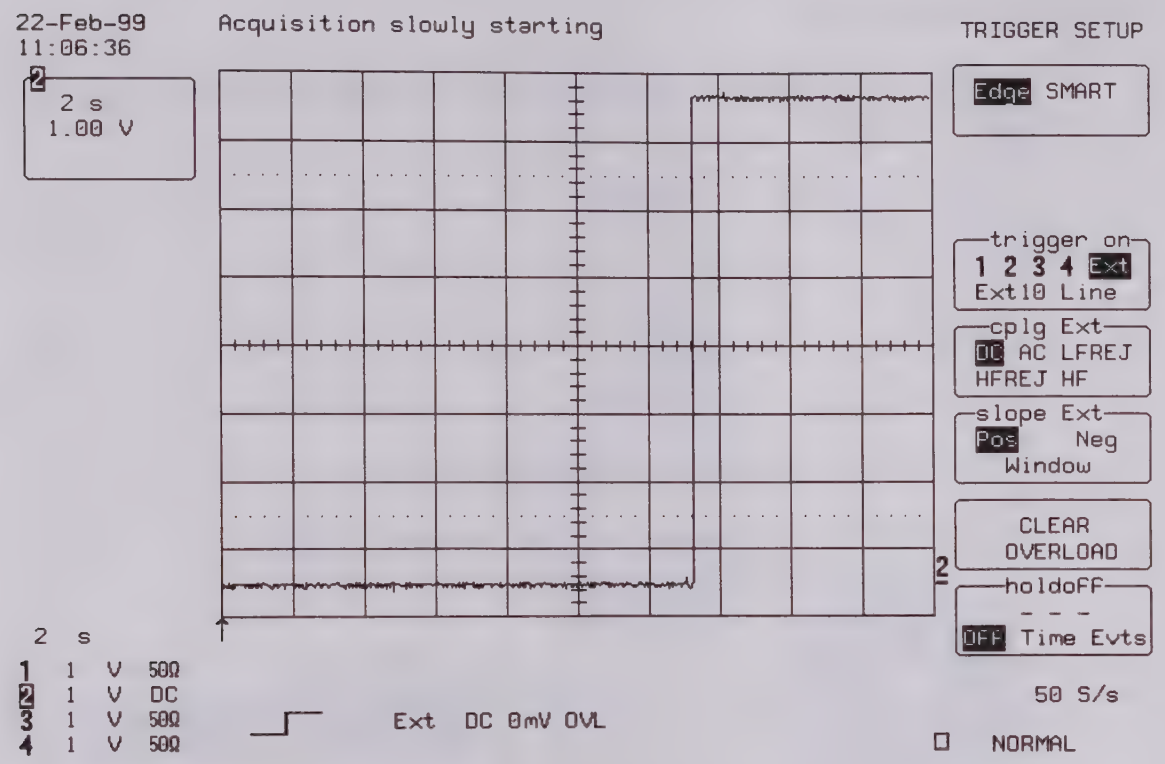

- Set Time base : **5 sec/div.**
- Set the output of the external **DC voltage source** to **+5.00 Volt**
- Check that the External overload doesn't trip for at least 60 seconds. Record the test result in Table 17.

LeCroy Digital Storage Oscilloscope

Performance Certificate

LT Series Manual Performance Test Procedure Version B - September 1999

Model_____ Serial Number_ Customer_____

Software Version_____

Inspection Date_____ Next Due_____

Temperature_____ Humidity_____%

Tested By_____ Report Number_____

Place of Inspection_____

Condition found_____ Condition Left_____

Approved By_____

Test Equipment Used

Instrument	Model	S/N	Cal Due Date
Signal Generator Radio Frequency	_____	_____	_____
Signal Generator Audio Frequency	_____	_____	_____
Voltage Generator DC Power Supply	_____	_____	_____
Step Generator Fast Pulser	_____	_____	_____
Digital Multimeter Voltmeter, Ohmmeter	_____	_____	_____

Traceable to_____

Table 1: LT Series Test Report

Coupling	Volts/div.	Measured Channel 1 Impedance Ω, MΩ	Measured Channel 2 Impedance Ω, MΩ	Measured Channel 3 Impedance Ω, MΩ	Measured Channel 4 Impedance Ω, MΩ	Measured External Impedance Ω, MΩ	Measured External/10 Impedance Ω, MΩ	Lower Limit Ω, MΩ	Upper Limit Ω, MΩ
DC 1MΩ	50 mV/div							0.99 MΩ	1.01 MΩ
DC 1MΩ	200 mV/div					N/A	N/A	0.99 MΩ	1.01 MΩ
AC 1MΩ	50 mV/div					N/A	N/A	1.188 MΩ	1.212 MΩ
AC 1MΩ	200 mV/div					N/A	N/A	1.188 MΩ	1.212 MΩ
DC 50Ω	50 mV/div						N/A	49.5 Ω	50.5 Ω
DC 50Ω	200 mV/div					N/A	N/A	49.5 Ω	50.5 Ω

Table 2: Impedance Test Record

Coupling	Volts/div.	Measured Channel 1 Leakage mV	Measured Channel 2 Leakage mV	Measured Channel 3 Leakage mV	Measured Channel 4 Leakage mV	Measured External Leakage mV	Lower Limit mV	Upper Limit mV
DC 1MΩ	50 mV/div						–1	+1
DC 1MΩ	200 mV/div						–1	+1

Table 3: Leakage Voltage Test Record

Coupling	Time/Div.	Measured sdev Channel 1 mV	Measured sdev Channel 2 mV	Measured sdev Channel 3 mV	Measured sdev Channel 4 mV	Limits mV
DC 1MΩ	20 ms					0.4
DC 1MΩ	1 ms					0.4
DC 1MΩ	50 µs					0.4
DC 1MΩ	2 µs					0.4
AC 1MΩ	2 µs					0.4
DC 50Ω	2 µs					0.4
DC 50Ω	20 µs					0.4

Table 4: RMS Noise Test Record

	LT322, LT224	LT344/342	LT344L/342L	Test Passed
Channel 1	1000 events	400 events	400 events	
Channel 2	1000 events	400 events	400 events	
Channel 3	1000 events	400 events	400 events	
Channel 4	1000 events	400 events	100 events	

Table 5: Erroneous Read / Write Test

Volts /div	Attenuator	P S Out Put	Measured Channel 1 V & mV			Measured Channel 2 V & mV			Measured Channel 3 V & mV			Measured Channel 4 V & mV			Limits
			DMM 1	Mean (A)	Δ 1 Mean–DMM	DMM 2	Mean (B)	Δ 2 Mean–DMM	DMM 3	Mean (C)	Δ 3 Mean–DMM	DMM 4	Mean (D)	Δ 4 Mean–DMM	
2 mV	X 100	+0.6 V													±1.25mV
		-0.6V													±1.25mV
5 mV	X 100	+1.5 V													±1.625 mV
		-1.5V													±1.625 mV
10 mV	X 100	+3.0 V													±2.25 mV
		-3.0V													±2.25 mV
20 mV	X 100	+6.0 V													±2.5 mV
		-6.0V													±2.5 mV
50 mV	X 10	+1.5V													±7.25mV
		-1.5V													±7.25mV
0.1 V	X 10	+3.0 V													±13.5mV
		-3.0V													±13.5mV
1 V	X 1	+3.0 V													±126mV
		-3.0V													±126mV
5 V	X 1	+15V													±0.626V
		-15V													±0.626V

Table 6: DC Accuracy Test Record

Volt /div.	Coupling DC	DSO offset	P S output	Measured Channel 1 V & mV			Measured Channel 2 V & mV			Measured Channel 3 V & mV			Measured Channel 4 V & mV			Limits
				DMM 1	Mean (A)	Δ 1 Mean–DMM	DMM 2	Mean (B)	Δ 2 Mean–DMM	DMM 3	Mean (C)	Δ 3 Mean–DMM	DMM 4	Mean (D)	Δ 4 Mean–DMM	mV
5mV	1 MΩ	+1 V	–1 V													±16.2
5mV	1 MΩ	-1 V	+1 V													±16.2
5mV	1MΩ	0V	0V													±1.2

Table 7: Offset Test Record

LT344/L, 342/L, 322												
Frequency	Measured Power	Generator Amplitude	Measured Channel 1		Measured Channel 2		Measured Channel 3		Measured Channel 4		Lower Limit	Upper Limit
MHz	mW	mV	Sdev(1) mV	Ratio(1) to 0.3	Sdev(2) mV	Ratio(2) to 0.3	Sdev(3) mV	Ratio(3) to 0.3	Sdev(4) mV	Ratio(4) to 0.3		
0.300	0.200			N/A		N/A		N/A		N/A	N/A	N/A
1.1	0.200										0.92	1.08
10.1	0.200										0.92	1.08
100.1	0.200										0.86	1.14
200.1	0.200										0.7	N/A
300.1	0.200										0.80	1.20
500.1	0.200										0.70	N/A

LT224												
Frequency	Measured Power	Generator Amplitude	Measured Channel 1		Measured Channel 2		Measured Channel 3		Measured Channel 4		Lower Limit	Upper Limit
MHz	mW	mV	Sdev(1) mV	Ratio(1) to 0.3	Sdev(2) mV	Ratio(2) to 0.3	Sdev(3) mV	Ratio(3) to 0.3	Sdev(4) mV	Ratio(4) to 0.3		
0.300	0.200			N/A		N/A		N/A		N/A	N/A	N/A
1.1	0.200										0.92	1.08
10.1	0.200										0.92	1.08
100.1	0.200										0.80	1.20
200.1	0.200										0.70	N/A

Table 8: DC 50Ω, 50 mV/div. Bandwidth Test Record

LT344/L, LT342/L,LT322												
Frequency	Measured Power	Generator Amplitude	Measured Channel 1		Measured Channel 2		Measured Channel 3		Measured Channel 4		Lower Limit	Upper Limit
MHz	mW	mV	Sdev(1) mV	Ratio(1) to 0.3	Sdev(2) mV	Ratio(2) to 0.3	Sdev(3) mV	Ratio(3) to 0.3	Sdev(4) mV	Ratio(4) to 0.3		
0.300	0.800			N/A		N/A		N/A		N/A	N/A	N/A
1.1	0.800										0.92	1.08
10.1	0.800										0.92	1.08
100.1	0.800										0.86	1.14
300.1	0.800										0.80	1.20
500.1	0.800										0.70	N/A

LT224												
Frequency	Measured Power	Generator Amplitude	Measured Channel 1		Measured Channel 2		Measured Channel 3		Measured Channel 4		Lower Limit	Upper Limit
MHz	mW	mV	Sdev(1) mV	Ratio(1) to 0.3	Sdev(2) mV	Ratio(2) to 0.3	Sdev(3) mV	Ratio(3) to 0.3	Sdev(4) mV	Ratio(4) to 0.3		
0.300	0.800			N/A		N/A		N/A		N/A	N/A	N/A
1.1	0.800										0.92	1.08
10.1	0.800										0.92	1.08
100.1	0.800										0.80	1.20
200.1	0.800										0.70	N/A

Table 9: DC 50Ω, 100 mV/div. Bandwidth Test Record

LT344/L, LT342/L, LT322											
Global BWL	Amplitude at 300 kHz	Measured Channel 1		Measured Channel 2		Measured Channel 3		Measured Channel 4		Lower Limit	Upper Limit
MHz	Sdev mV	Sdev(1) mV	Freq(1) MHz	Sdev(2) mV	Freq(2) MHz	Sdev(3) mV	Freq(3) MHz	Sdev(4) mV	Freq(4) MHz	MHz	MHz
25	200	140		140		140		140		10	37
200	200	140		140		140		140		110	290

LT224											
Global BWL	Amplitude at 300 kHz	Measured Channel 1		Measured Channel 2		Measured Channel 3		Measured Channel 4		Lower Limit	Upper Limit
MHz	Sdev mV	Sdev(1) mV	Freq(1) MHz	Sdev(2) mV	Freq(2) MHz	Sdev(3) mV	Freq(3) MHz	Sdev(4) mV	Freq(4) MHz	MHz	MHz
25	200	140		140		140		140		10	37
200	200	140		140		140		140		N/A	N/A

Table 10: DC 50Ω, Bandwidth Limiter Test Record

Trigger Level	Trigger Slope	Channel 1	Channel 2	Channel 3	Channel 4	Lower Limit	Upper Limit
mV		Measured DC Trigger Level (1) mV	Measured DC Trigger Level (2) mV	Measured DC Trigger Level (3) mV	Measured DC Trigger Level (4) mV	mV	mV
0	Pos					–30	+30
0	Neg					–30	+30
+300	Pos					+270	+330
+300	Neg					+270	+330
–300	Pos					–270	–330
–300	Neg					–270	–330

Table 11: Channel DC Trigger Test Record

Trigger Level	Trigger Slope	Channel 1	Channel 2	Channel 3	Channel 4	Lower Limit	Upper Limit
mV		MeasuredHF REJ Trigger Level (1) mV	Measured HFREJ Trigger Level (2) mV	Measured HFREJ Trigger Level (3) mV	Measured HFREJ Trigger Level (4) MV	mV	mV
0	Pos					–50	+50
0	Neg					–50	+ 50
+300	Pos					+250	+350
+300	Neg					+250	+350
–300	Pos					–250	–350
–300	Neg					–250	–350

Table 12: Channel HFREJ Trigger Test Record

Trigger Slope	External Trigger Level	External DC	External HFREJ	External Limits		External/10 Trigger Level	External/10 DC	External/10 HFREJ	External/10 Limits	
	mV	Measured DC Trigger Level (Ext) mV	Measured HFREJ Trigger Level (Ext) mV	Lower MV	Upper mV	V	Measured DC Trigger Level (Ext10) V	Measured HFREJ Trigger Level (Ext10) V	Lower V	Upper V
Pos	0			–50	+50	0			–0.5	+0.5
Neg	0			–50	+50	0			–0.5	+0.5
Pos	+300			+250	+350	+3			+2.5	+3.5
Neg	+300			+250	+350	+3			+2.5	+3.5
Pos	–300			–250	–350	–3			–2.5	–3.5
Neg	–300			–250	–350	–3			–2.5	–3.5

Table 13: External & Ext/10 DC and HFREJ Trigger Test Record

Smart Trigger Pulse Width ns	Generator Frequency MHz	Width <	Width >	Triggered	Pass
< 10	100	On	Off	Yes	
< 10	100	Off	On	No	
> 10	40	Off	On	Yes	
> 10	40	On	Off	No	
< 100	10	On	Off	Yes	
< 100	10	Off	On	No	
> 100	4	Off	On	Yes	
> 100	4	On	Off	No	

Table 14: Smart Trigger Test Record

Generator Frequency MHz	Post Trigger Delay Msec	Delay (A) ns	Delay (1) msec	Difference delay(A) –delay(1)+5msec	Lower Limit µsec	Upper Limit µsec
1.00000	5.00000				-0.5	+0.5

Table 15: Time Base Test Record

Coupling	Measured Channel 1 Over+(A) %	Measured Channel 2 Over+(B) %	Measured Channel 3 Over+(C) %	Measured Channel 4 Over+%(D) %	Overshoot Limit (%)	
					LT344/L, 342/L, 322	LT224
DC 50Ω					0 to +12	0 to +10

Measured Channel 1 Rise(A) ns	Measured Channel 2 Rise(B) ns	Measured Channel 3 Rise(C) ns	Measured Channel 4 Rise(D) ns	Rise time Limit ns	
				LT344/L, 342L, 322	LT224
				0.8	1.9

Table 16: Rise Time and Overshoot Test Record

DC Reference Source Volt	Measured Channel 1 Overload Trip sec	Measured Channel 2 Overload Trip sec	Measured Channel 3 Overload Trip sec	Measured Channel 4 Overload Trip sec	Measured External Overload Trip sec	Overload Trip Limit sec
7.07						< 30
5.00						> 60

Table 17: Overload Trip Test Record

6. Maintenance

6.1 Introduction

This section contains information necessary to maintain, calibrate and troubleshoot the LeCroy waverunner digital storage oscilloscopes.

6.1.1 Safety Precautions

The symbol used in this manual indicates dangers that could result in personal injury.

The symbol used in this manual identify conditions or practices that could damage the instrument.

The following servicing instructions are for use by qualified personnel only. Do not perform any servicing other than contained in service instructions. Refer to procedures prior to performing any service.

Exercise extreme safety when testing high energy power circuits. Always turn the power OFF, disconnect the power cord, discharge the cathode ray tube and all capacitors before disassembling the instrument.

6.1.2 Antistatic Precautions

Any static charge that builds on your person or clothing may be sufficient to destroy CMOS components, integrated circuits, Gate array's.....etc.

In order to avoid possible damage, the usual precautions against static electricity are required.

- Handle the boards in antistatic boxes or containers with foam specially designed to prevent static build-up.
- Ground yourself with a suitable wrist strap.
- Disassemble the instrument at a properly grounded work station equipped with antistatic mat.
- When handling the boards, do not touch the pins.
- Stock the boards in antistatic bags.

6.2 Software Update Procedure

6.2.1 Upgrading Firmware

LeCroy Corporation has a policy of continually improving and upgrading its products.

The LT Series instrument is equipped with flash Prom on processor board.
The software is updated to the latest version using either the floppy disk drive or the memory card interface.

After any software change, reboot the scope or perform a general reset of the instrument by simultaneously depressing the F2 button, the F5 menu button and the CH1 button.

a. Performing the Update from Floppy

- Format a single high density 1.44Mb floppy in the scope (not in the PC)
- Create a directory LECROY_P in the root directory of the disk
- Copy the file VXFOUND.FLA, into the directory created above.
- Label this disk " Firmware Update Disk "
- Cycle power to the scope with no floppy inserted.
- When the scope boots enter the "Show Status" , "System" menu to verify that version 08.1.1 or later is currently running.
- Insert the Firmware Update Disk into the scope's floppy drive.
- Select "Utilities", "Special Modes", "Firmware Update", "Update from Floppy" .
- Press twice "Update Flash".
- Wait for two minutes until displaying "FLASH UPDATE SUCCESSFUL"on the DSO.
- When the operation is complete remove the floppy and reboot the scope.
- When the scope boots enter the "Show Status", "System " menu to verify that the new version is currently running.

Warning:

Reprograming the Flash memory is a procedure to be perform with care.
Any loss of power during the update process could cause the scope to require Factory service.
Note that once software has update it is not possible to revert to the previous software version.

b. Performing the Update from Card

- Format a 2Mb SRAM memory card
- Create a directory LECROY_P in the root directory of the card
- Copy the file VXFOUND.FLA, into the directory created above.
- Cycle power to the scope with no floppy or card inserted.

- When the scope boots enter the "Show Status" , "System" menu to verify that version 8.1.1 or later is running.
- Insert the Card created above into the PCMCIA Slot.
- Select "Utilities", "Special Modes", "Firmware Update", "Update from Card" .
- Press twice "Update Flash".
- Wait for two minutes until displaying "FLASH UPDATE SUCCESSFUL"on the DSO.
- When the operation is complete remove the card and reboot the scope.
- When the scope boots enter the "Show Status", "System " menu to verify that the new version is currently running.

6.2.2 Software Options

The following software options are available:

- EMM Extended Math & Measurement
- WAVA Wave Analysis
- MC01 PCMCIA Memory Card
- JTA Jitter and Timing Analysis

6.2.2.1 Changing Software Option Key

a. Scope ID, Scope Serial Number

The scope ID and scope s/n: are used to request a Software Option Key

- Enter the scope's Software Options menu (located under the **STATUS**, **SYSTEM** menu).
- Note the **SCOPEID**, i.e: C63B9B-A5 and **Scope s/n**: LT34400156 that are found on that menu.

b. Entering Option Key in the DSO

- Enter the scope's Software Options menu (**STATUS**, **SYSTEM** menu).
- Enter the **ADD OPTION KEY** menu on the DSO
- Enter the new option key using the dymo-editor, i.e: **C4B5-F4A9-4464-E7ED**
- Click on **ENTER THIS OPTION KEY** to add the key
- Reboot the scope and verify that the options added correctly.

Then check in the system summary, by using the show status button on the front panel, the scope serial number.

6.3 Equipment and Spare Parts Recommended for Service

6.3.1 Test Equipment Required

See Table 5-1 in section 5.2.

6.3.2 LT Series Spare Parts

Parts Number	Assembly	Adjustments or Confirmations	Performance Tests
213025610	CPU Board without DRAM	6.5.1	None
213025605	Main Board for LT344/344L without HMM436's	6.5.2	None
213025650	Main Board for LT342/342L without HMM436's	6.5.2	None
213025648	Main Board for LT322 without HMM436's	6.5.2	None
213025670	Main Board for LT224 without HMM436's	6.5.2	None
213025678	Front Cover(4CH)for LT344/224	None	None
213025679	Front Cover(2CH) for LT342/322	None	None
213025680	8.4"Color TFT LCD Display Assy	None	None
213025615	Power Board	6.5.3	None
DMB020691	Floppy Disc Drive	None	None
213025681	Printer Assy	None	None

The other parts are not on the above list because the probability of failure is very low.
See chapter 7 and 8 for mechanical and electrical replaceable parts.

6.4 Board Exchange Procedure

6.4.1 Processor Board Exchange Procedure

The serial number of the LT Series oscilloscope is loaded in the real time clock memory which is battery backed up. If it becomes necessary to replace the processor board, the serial number must be loaded in the memory of the new board by using LeCroy program " LeCalsoft " under GPIB remote control.
To run " LeCalsoft " type SKP.exe, in the main menu type S, and follow the instructions, use five digits to enter the serial number (i.e. 10281).
Then check in the system summary, by using the show status button on the front panel, the scope serial number.

6.4.2 Main Board Exchange Procedure

After Main Board is exchanged, adjust as the following method.

- Assemble the lower cover and upper cover.
- Plug in the power cord and turn on the LT Series.
- Wait for fifteen minutes.
- Enter the internal menus by pressing menu soft-keys 3 & 4, then release soft-key 3, then release soft-key 4, then press soft-key 5.
- Select "**Maintenance**", "**Board Test Results**", "**Adjust**".
- Press "Measure **Board Items**", and wait till "Succeeded" is displayed.
- Press "Measure **Overload**", and wait till "Measure Complete" is displayed.
- Press "Save **Result to EEPROM**" two times.

Note ; Do not press the other menu keys, or some calibration data of Main Board may be lost.

This section does not include the other manual adjustments of Main Board, and does not contain any instructions or descriptions about Main Board calibration. Main Board adjustments required complex test set-up and calibration Software. For information on the availability of the tester and software, contact your nearest LeCroy service centre.

6.4.3 Power Board Exchange Procedure

After Power Board is exchanged, confirm the voltage as the following procedure.

- Remove the upper cover and the lower cover. (see 7.G)
- Turn the scope upside down.
- Turn on the power, set the scope to **Auto Trigger** and **500MS/s.**
- Confirm the following voltage on solder side of Main Board within ten minutes.

+12V analog	(Min = +11.76V, Max = +12.24V)	21C11
+5V analog	(Min = +4.925, Max = +5.075V)	21C21
-5V analog	(Min = -4.975V, Max = -5.05V)	21C71
-12V analog	(Min = -11.76V, Max = -12.24V)	21C61
+5V digital	(Min = +4.85V, Max = +5.15V)	21C41
-4.5V digital	(Min = -4.365V, Max = -4.635V)	21C91

Note ; Do not turn the potentiometers on Power Board.
Do not keep the condition that the lower cover is removed, or the heat sinks will become hot and the condition may damage some components on Main Board.

This section does not include the other manual adjustments of Power Board, and does not contain any instructions or descriptions about Power Board calibration. Power Board adjustments required complex test set-up.
For information on the availability of the tester, contact your nearest LeCroy service centre.

6.5 Troubleshooting and Flow Charts

6.5.1 Introduction

The troubleshooting information contained in this section is intended for use by qualified personnel having a basic understanding of electronics (analog and digital). In order to simplify servicing and minimise downtime, the following list of possible symptoms, likely causes, and troubleshooting steps have been prepared.
The first step in troubleshooting is to check for obvious items like blown fuses.
The power supply is the next item to check before proceeding to more detailed troubleshooting, since noise or low power supply voltages can cause a variety of digital and analog problems.

6.5.2 Line Fuses Replacement

The power supply of the oscilloscope is protected against short circuits and overload by means of two T6.3A / 250 V fuses located above the main plugs.

Turn off the power and disconnect the line cord from the instrument
Disconnect the instrument from other equipment.

To replace line fuses, proceed as follow:

- Open the fuse box by inserting a small flat screwdriver under the plastic cover and remove the fuse carrier from the holder
- Remove the fuse and replace it with the proper type: T6.3 A / 250 V, LeCroy part number: **433 162 630**

6.5.3 Initial Troubleshooting Chart

Most procedures in this section will allow troubleshooting down to the **BOARD LEVEL.**

Defective circuit boards will be repaired or exchanged by the regional LeCroy service office or the local representative (see section 2.2).

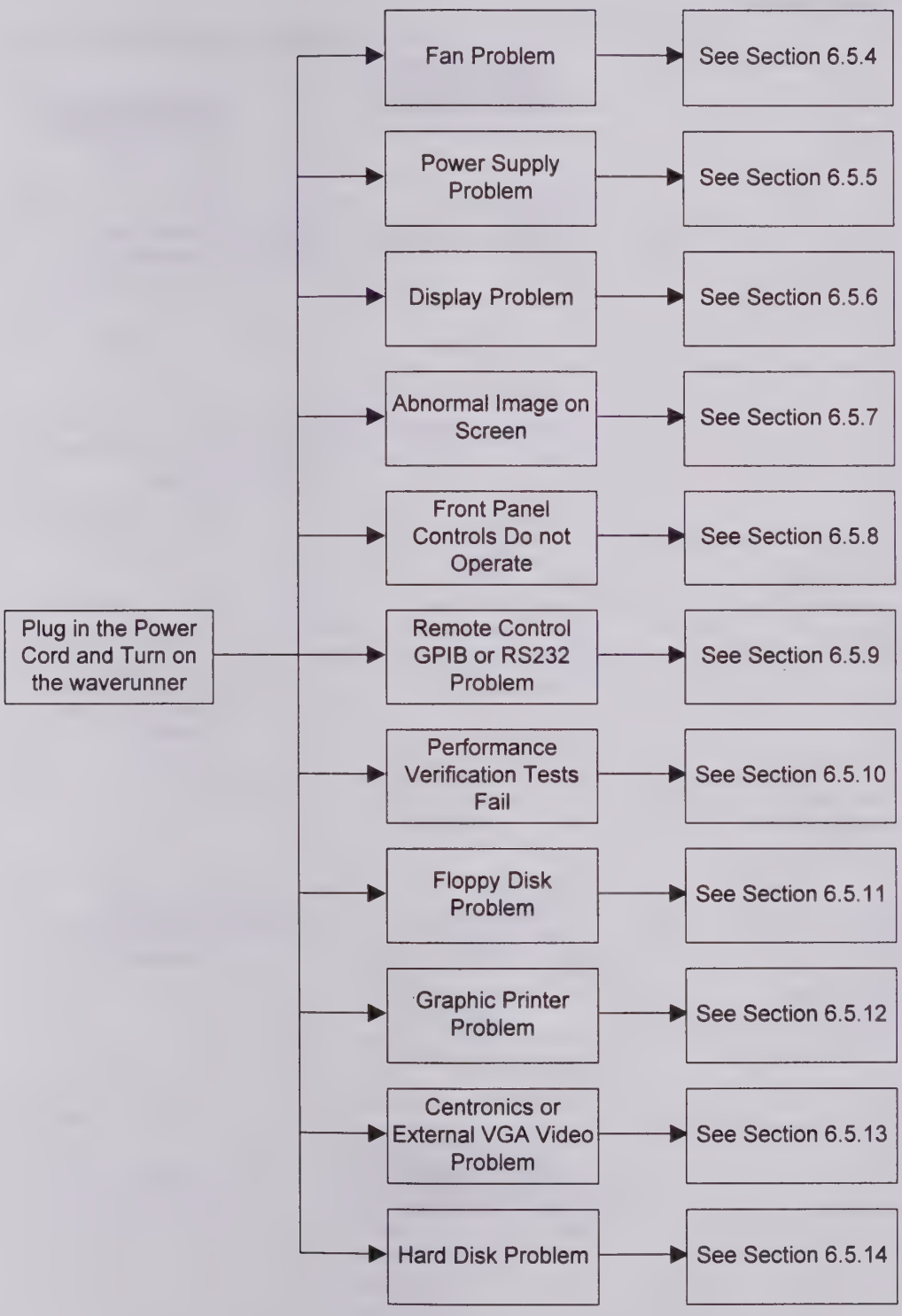
Plug in the Power Cord and Turn on the waverunner
Fan Problem
See Section 6.5.4
Power Supply Problem
See Section 6.5.5
Display Problem
See Section 6.5.6
Abnormal Image on Screen
See Section 6.5.7
Front Panel Controls Do not Operate
See Section 6.5.8
Remote Control GPIB or RS232 Problem
See Section 6.5.9
Performance Verification Tests Fail
See Section 6.5.10
Floppy Disk Problem
See Section 6.5.11
Graphic Printer Problem
See Section 6.5.12
Centronics or External VGA Video Problem
See Section 6.5.13
Hard Disk Problem
See Section 6.5.14

6.5.4 Fan Problem

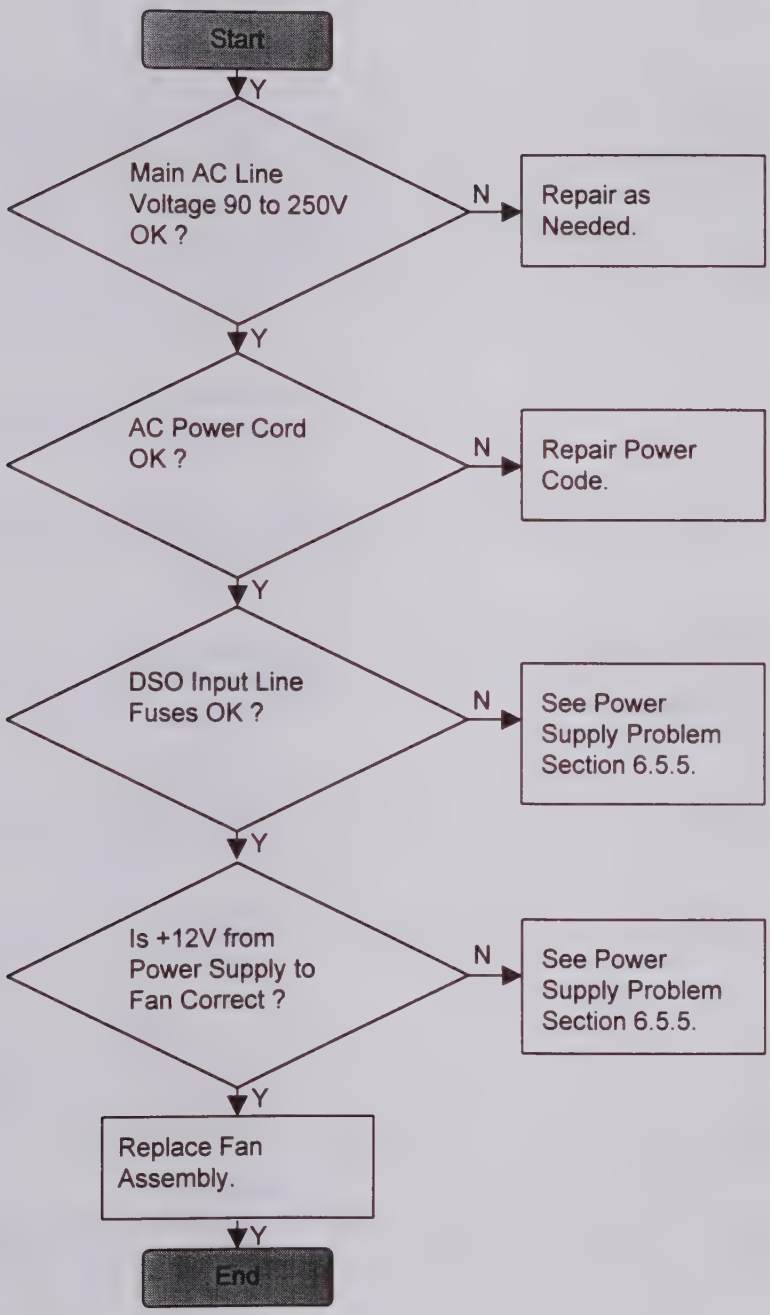

6.5.5 Power Supply Voltage Problem

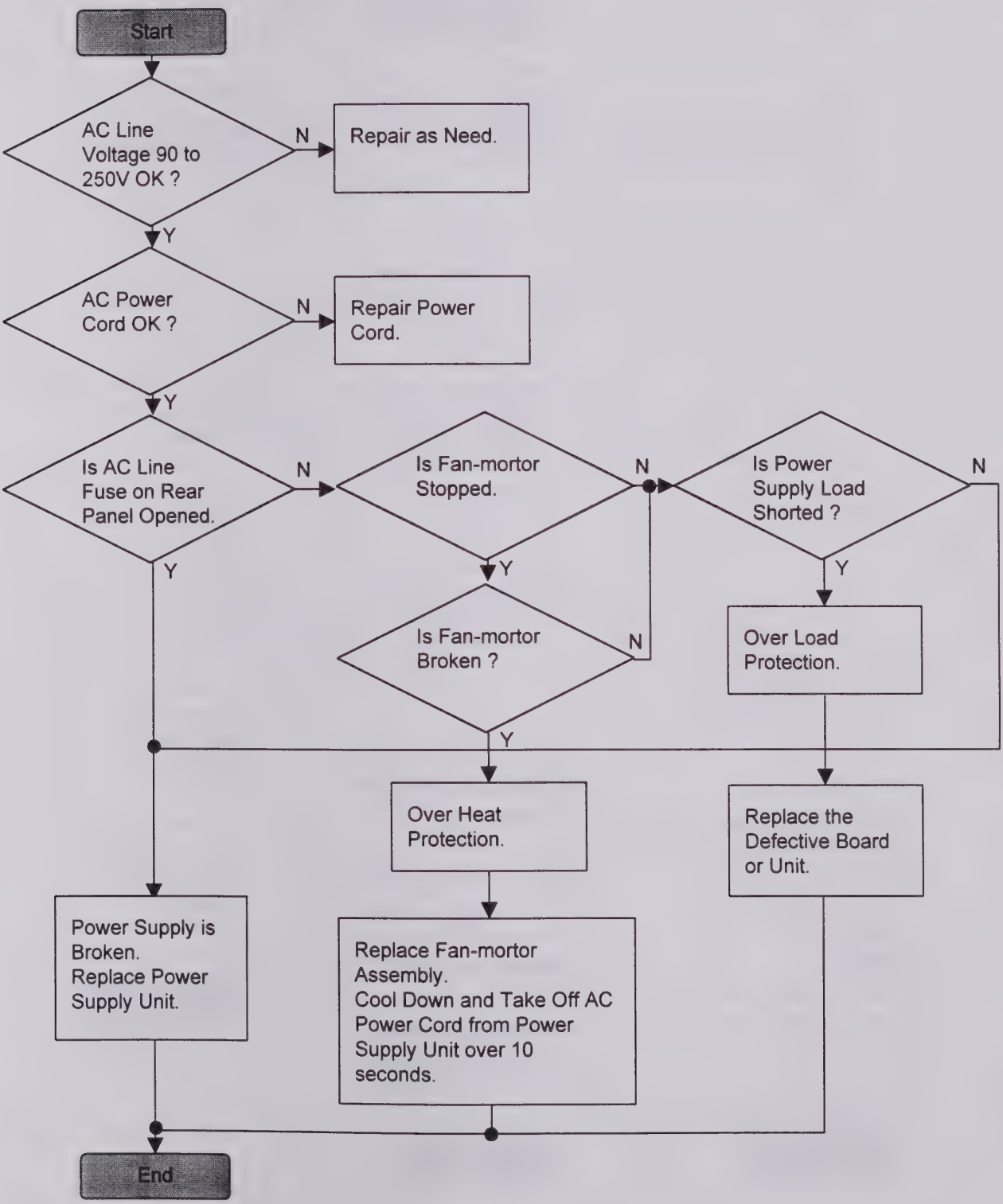

6.5.6 Display Problem

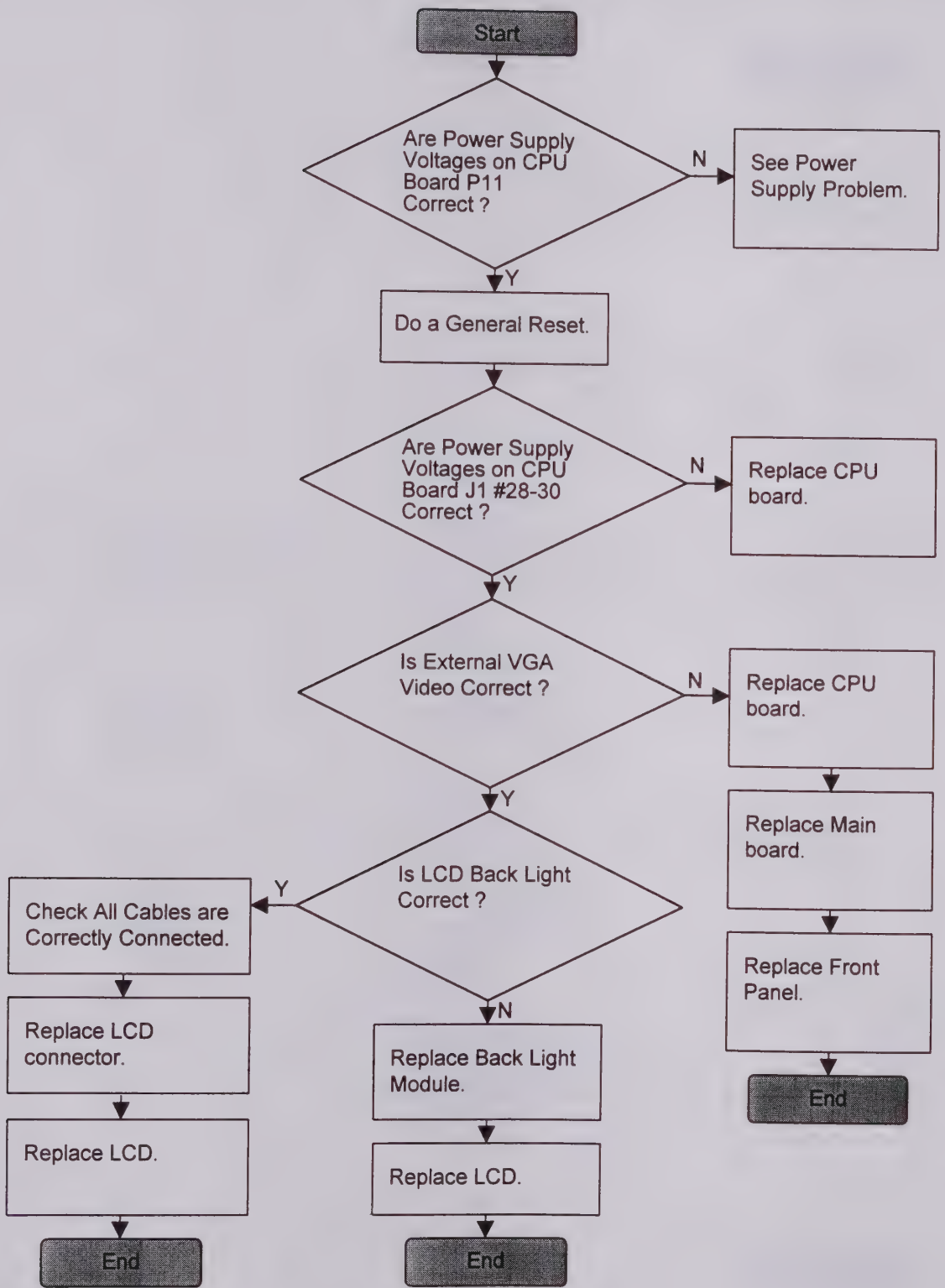

6.5.7 Front Panel Controls Do not Operate

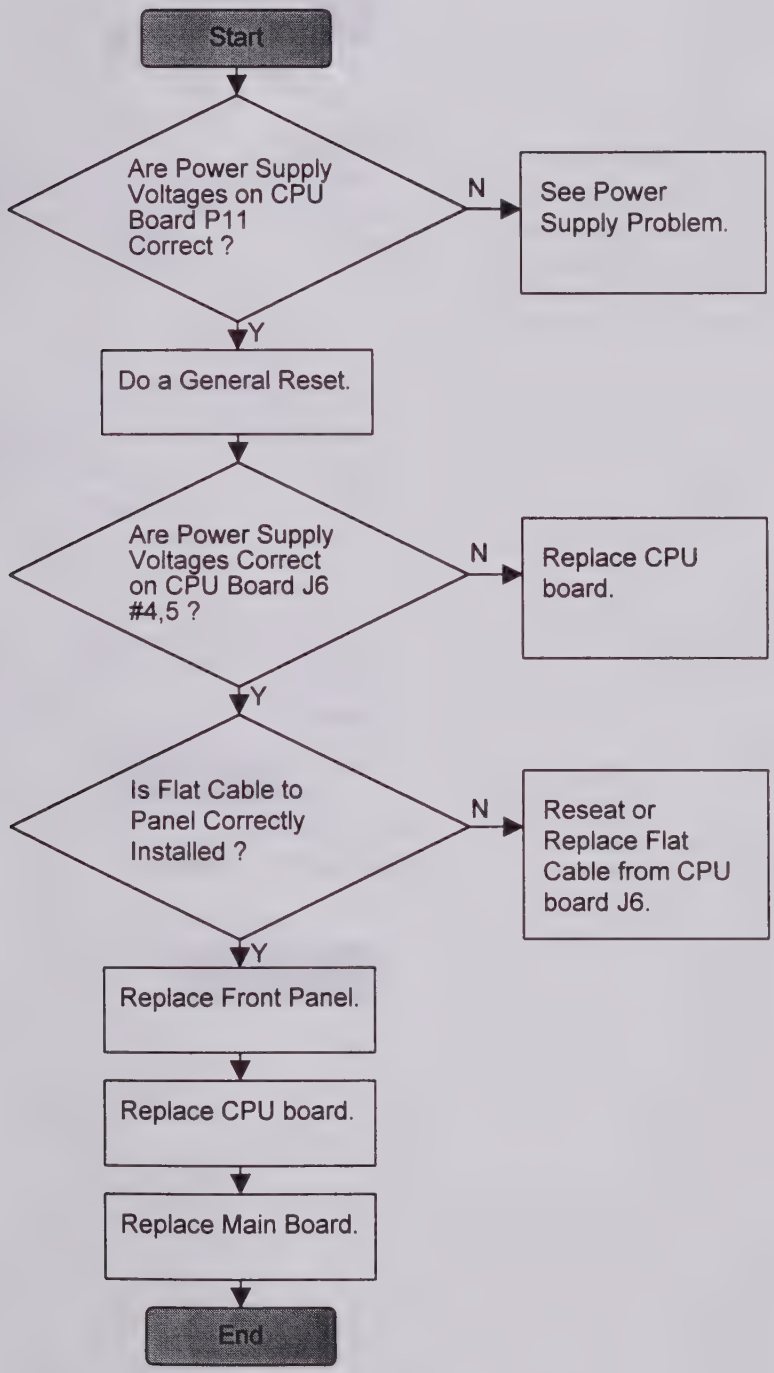

6.5.8 Remote Control GPIB or RS232 Problem

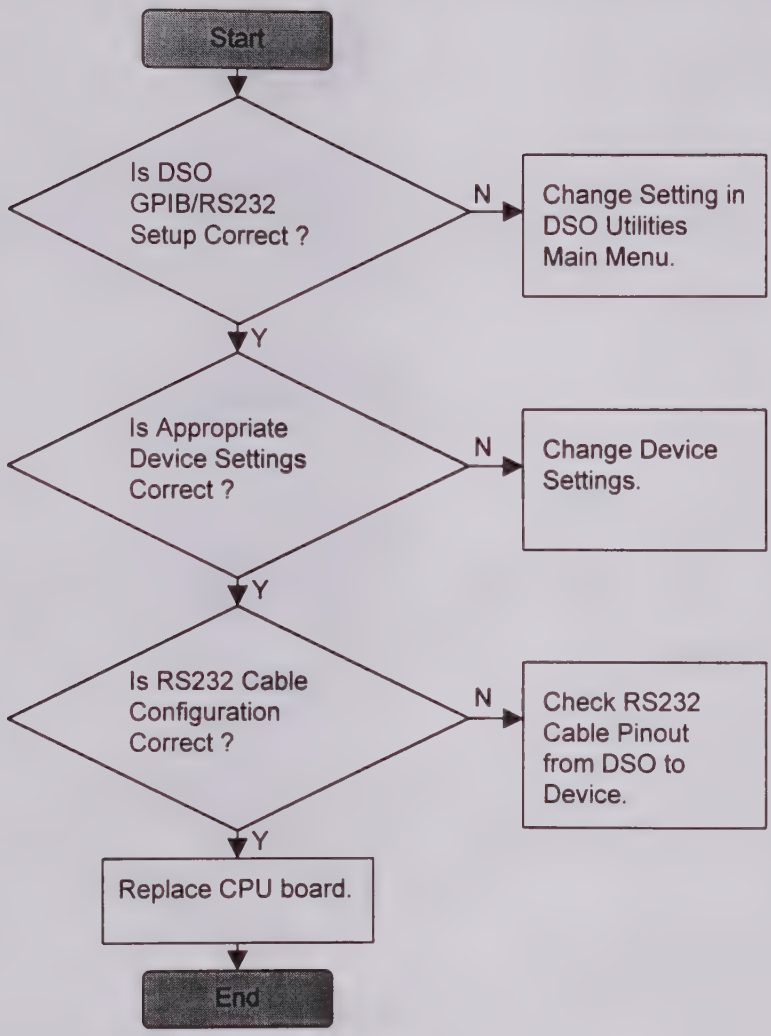

6.5.9 Floppy Disk Drive Problem

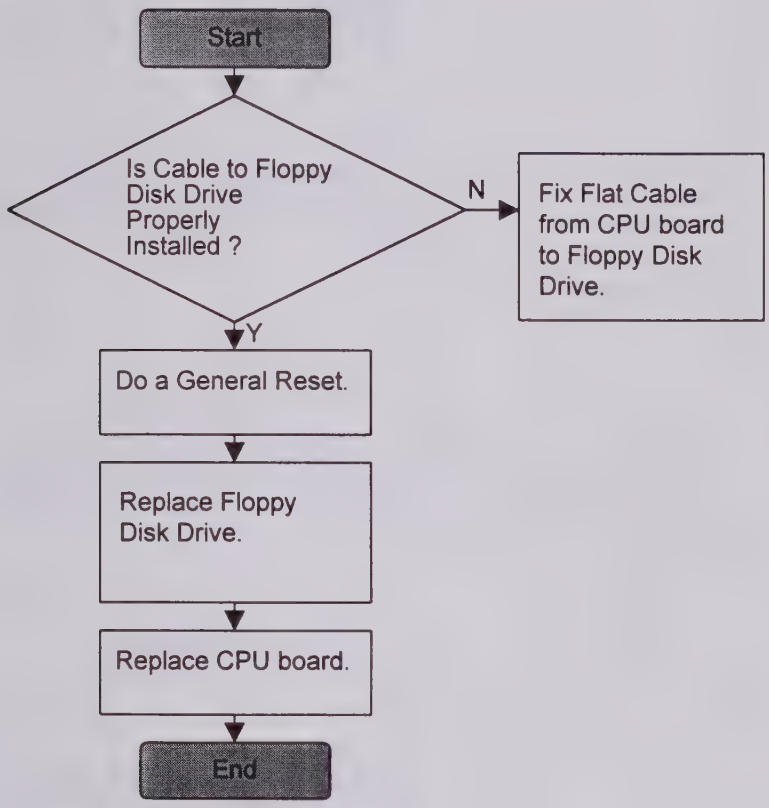

6.5.10 Performance Verification Fails

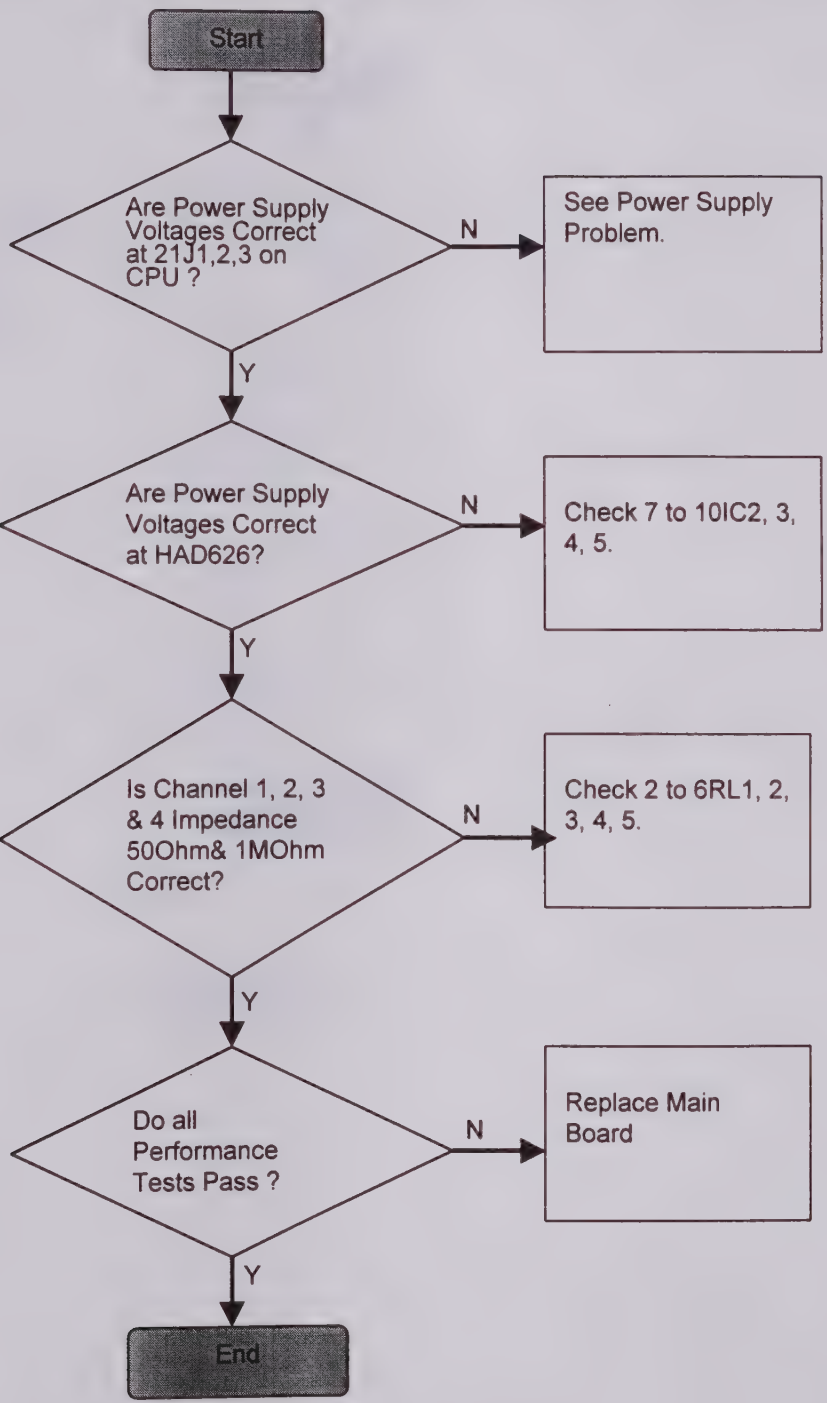

6.5.11 Graphic Printer Problem

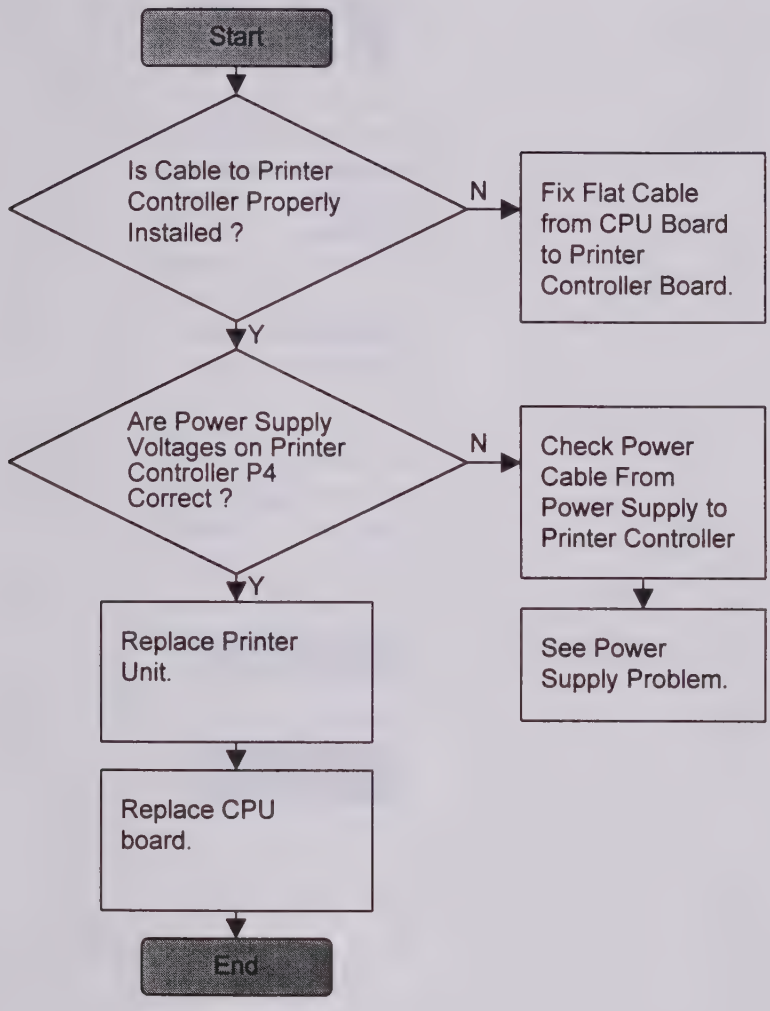

6.5.12 Centronics Problem

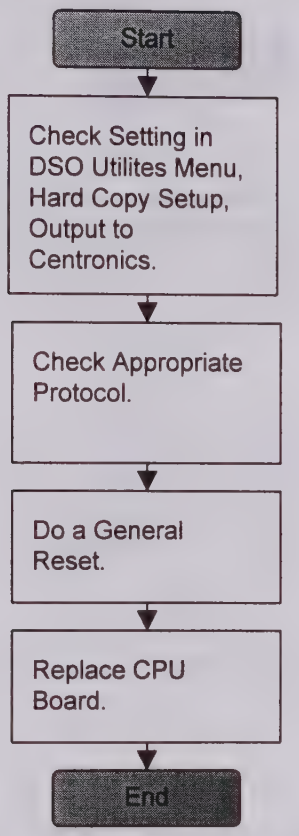

6.5.13 Hard Disk Drive Problem

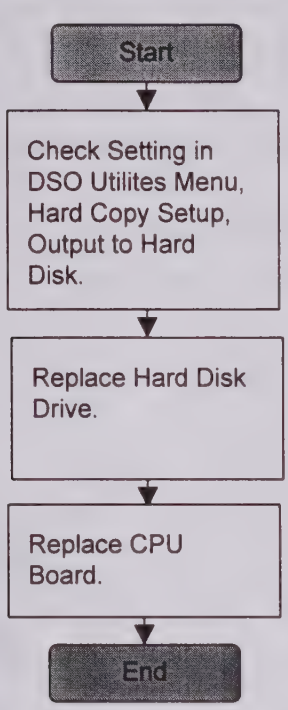

7. Mechanical Parts & Removal

A. Removal of the Upper Cover Assembly (with printer)

- A1, A2 : Remove the nine M3 x 6 screws with nylon washer (one on the top/each two on the right and left sides/four on the rear).
- A3 : In the case of a unit with a built-in printer (option), open the printer cover and depress the locking latch.
- A4 : Slide the upper cover rearward by approx. 5 mm. It is firm.
- A5 : Remove the upper cover by opening and lifting the lower portion of the cover.

[A1]

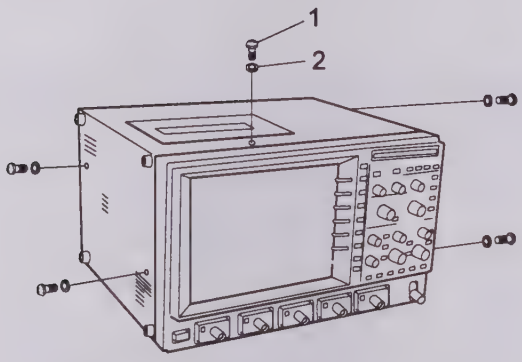

[A4]

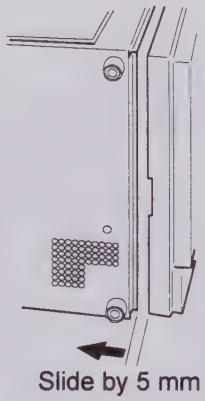

[A2]

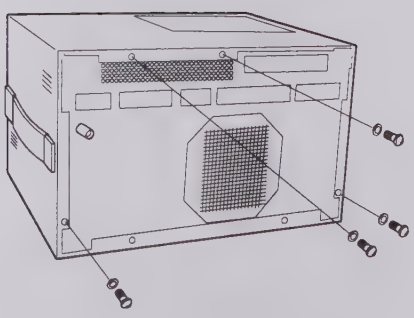

[A3]

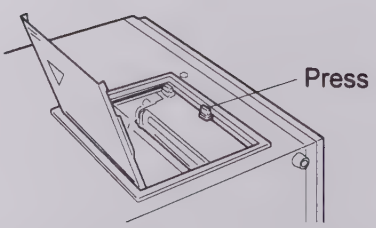

[A5]

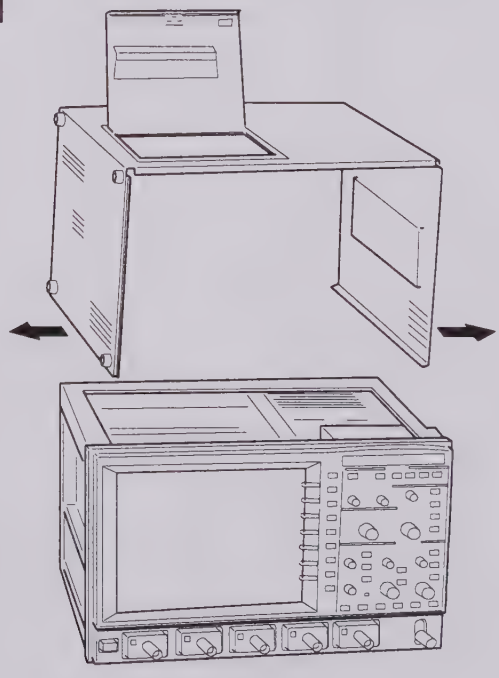

[A6]

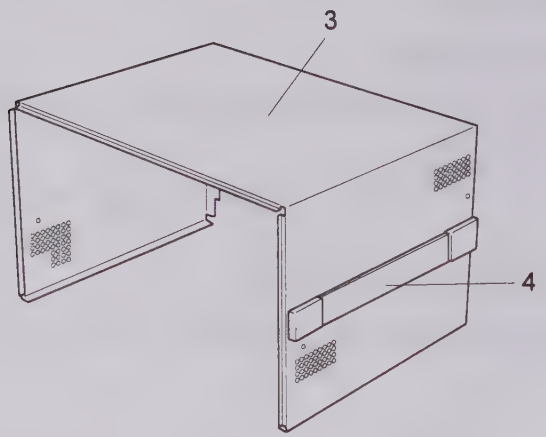

[A7]

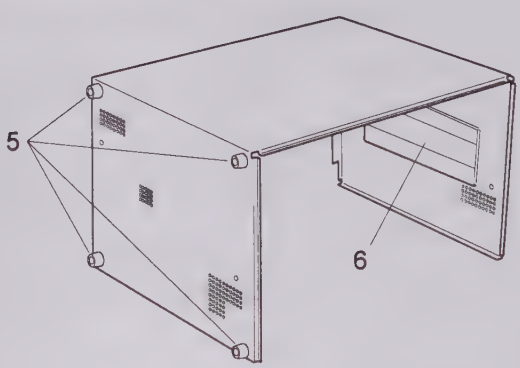

Upper Cover Replaceable Parts

Item	IWATSU Part Number	Quantity	Description
1	MKB130062	9.0	Screw M3x6
2	MPW930000	9.0	Washer W-3, nylon
3	KBA787311	1.0	STD TOP COVER LE
4	MTH000791	1.0	Handle THA-238-L260 UL-I
5	MGA000721	4.0	Side Foot 5475 UL-I
6	KPL142611	3.0	Cushion
3, 4, 5, 6	21302-5676	1.0	LT UPPER COVER ASSY

[A8]

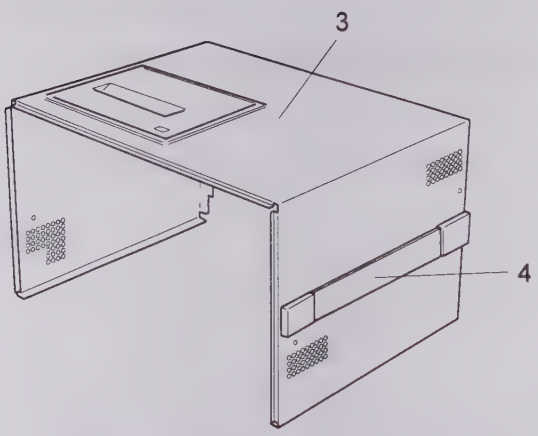

[A9]

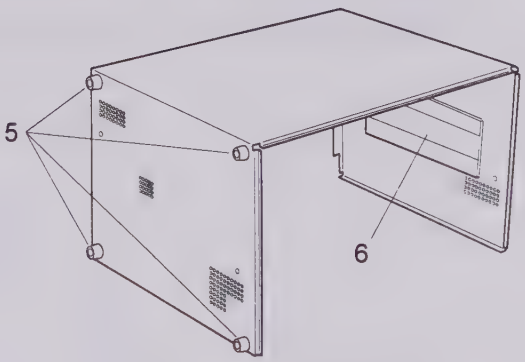

Upper Cover (with a built-inprinter) Replaceable Parts

Item	IWATSU Part Number	Quantity	Description
1	MKB130062	5.0	Screw M3x6
2	MPW930000	5.0	Washer W-3, nylon
3	KBA786321	1.0	TOP COVERL E
4	MTH000791	1.0	Handle THA-238-L260 UL-I
5	MGA000721	4.0	Side Foot 5475 UL-I
6	KPL142611	3.0	Cushion
7	KCM141411	1.0	PRINTER COVER FRAME UL-I
8	KCM141311	1.0	PRINTER COVER UL-I
3, 4, 5, 6, 7, 8	21302-5677	1.0	LT UPPER COVER(GP02) ASSY

B. Removal of the Bottom Cover Assembly

- Remove the upper cover.
- Remove the five M3 x 6 screws (with nylon washer, 3 on the bottom/2 on the rear).

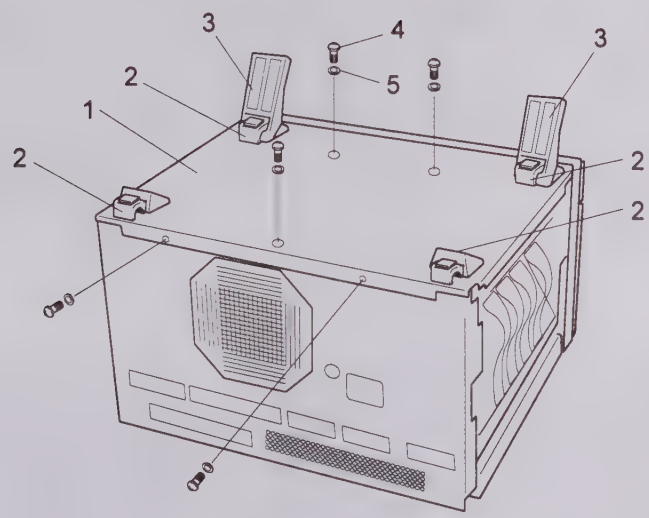

Bottom Cover Replaceable Parts

Item	IWATSU Part Number	Quantity	Description
1	KBA786921	1.0	BOTTOM COVER LE
2	KAS137811	4.0	BOTTOM FOOT ASSY
3	KCM131421	2.0	Rotor for the tilt stand
4	MKB130062	5.0	Screw M3x6
5	MPW930000	5.0	Washer W-3, nylon

C. Removal of the Printer Assembly

Remove the upper cover.

- C1 : Remove the four M3 x 6 screws (2 on the TOP FRAME L/2 on the center frame).
- C2 : Remove the CPU J7/FFC cable.
- C2 : Remove the POWER BOARD CN6/power 3P cable.

[C1]

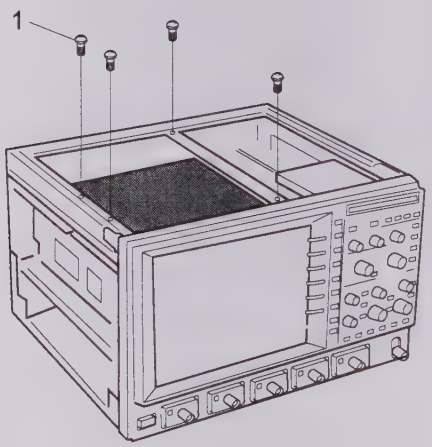

[C3]

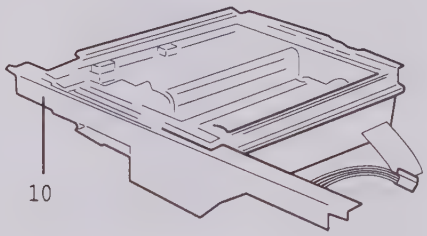

[C2] View as the rear side of the printer unit lifted

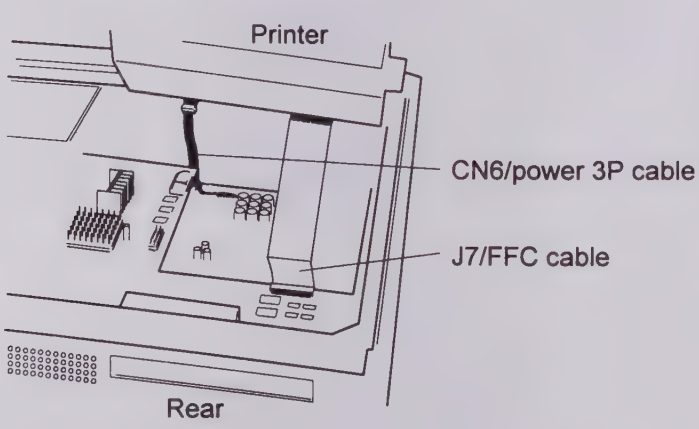

[C4]

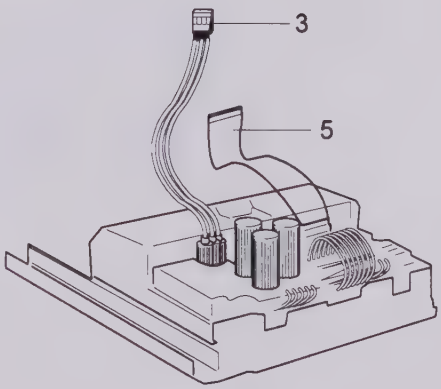

Printer Parts

Item	IWATSU Part Number	Quantity	Description
1	MKB130062	4.0	Screw KB(+)3X6S(NIP)
2	DZB992361	1.0	PRINTER FTP-642MCL001
3	KHB189311	1.0	PRINTER POWER CABLE UL-I
4	KHB189611	1.0	PRINTER HEAD CABLE UL-I
5	AHB202811	1.0	FFC-26P-L140-P1/CPU
6	KCM141211	1.0	PRINTER CASE UL-I
7	MFA001471	1.0	TL-304-1
8	KBA785511	1.0	PRINTER BASE UNIT
9	MSQ901661	3.0	Screw TT2(+)3X8S
10	KBA786211	1.0	CENTER FRAME
11	MKB130062	2.0	Screw KB(+)3X6S(NIP)
12	MSQ903531	3.0	Screw S-tight KB(+)2.5X6S
13	MKB130062	4.0	Screw KB(+)3X6S(NIP)
14	MHK000961	1.0	BAND CV-70/YJ-80
15	KCM142121	1.0	TKM KEYTOP B- GR UL-I
2 to 15	21302-5681	1.0	LT PRINTER UNIT(GP02) See Fig [C3, C4]

D. Removal of the Floppy Assembly

Remove the upper and bottom covers.

- D1 : Remove the CPU BOARD J2/FFC cable from the CPU.
- D1 : Remove two M3 x 6 screws on the TOP FRAME R and FRONT FRAME A.

[D1]

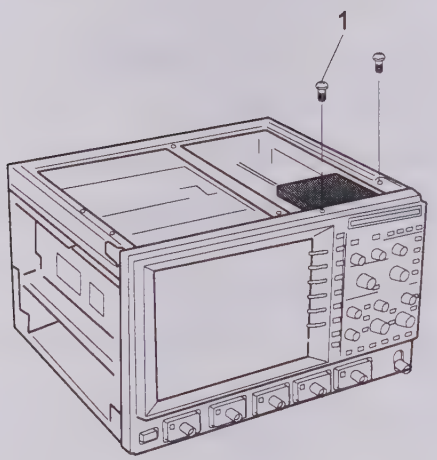

[D2]

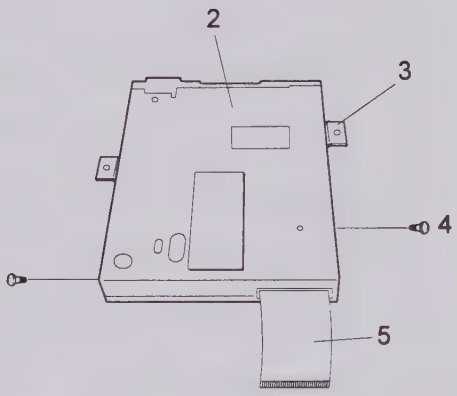

Floppy Replaceable Parts

Item	IWATSU Part Number	Quantity	Description
1	MKB130062	2.0	Screw M3x6
2	DMB020691	1.0	FD DRIVE WIDE-00B See Fig [D2]
3	KBA785211	1.0	FDD SUPPORT PLATE
4	MSQ903521	2.0	Screw M2.5x4

E. Removal of the CPU Board

Remove the upper and bottom covers.

Remove the printer and floppy.

Remove the four M3 x 6 screws from the right and left frame.

[Note] Remove the cables on the CPU Board and next the screws on it.

- E1 : Remove the four FFC cables on the CPU Board (J3/26pin, J4/22pin, J5/26pin, J8/22pin).
- E1 : Remove the two FFC cables on the CPU Board (J1/30pin, J6/22pin).
- E1 : Remove the P5 power connector on the CPU Board (to LCD).
- E1 : Remove the P11 power connector on the CPU Board (to POWER).
- E2 : Remove the four M3 x 6 screws (4 on the rear, fastening between connectors and between the rear panel and CPU).

  Remove the eight M3x6 screws on the TOP FRAME L and R.
- E3 : Remove the six M3 x 6 screws on the CPU Board and remove the processor broad by sliding it toward the front side.

Caution : Batteries are mounted, so care should be taken to prevent short-circuiting.

[E1]

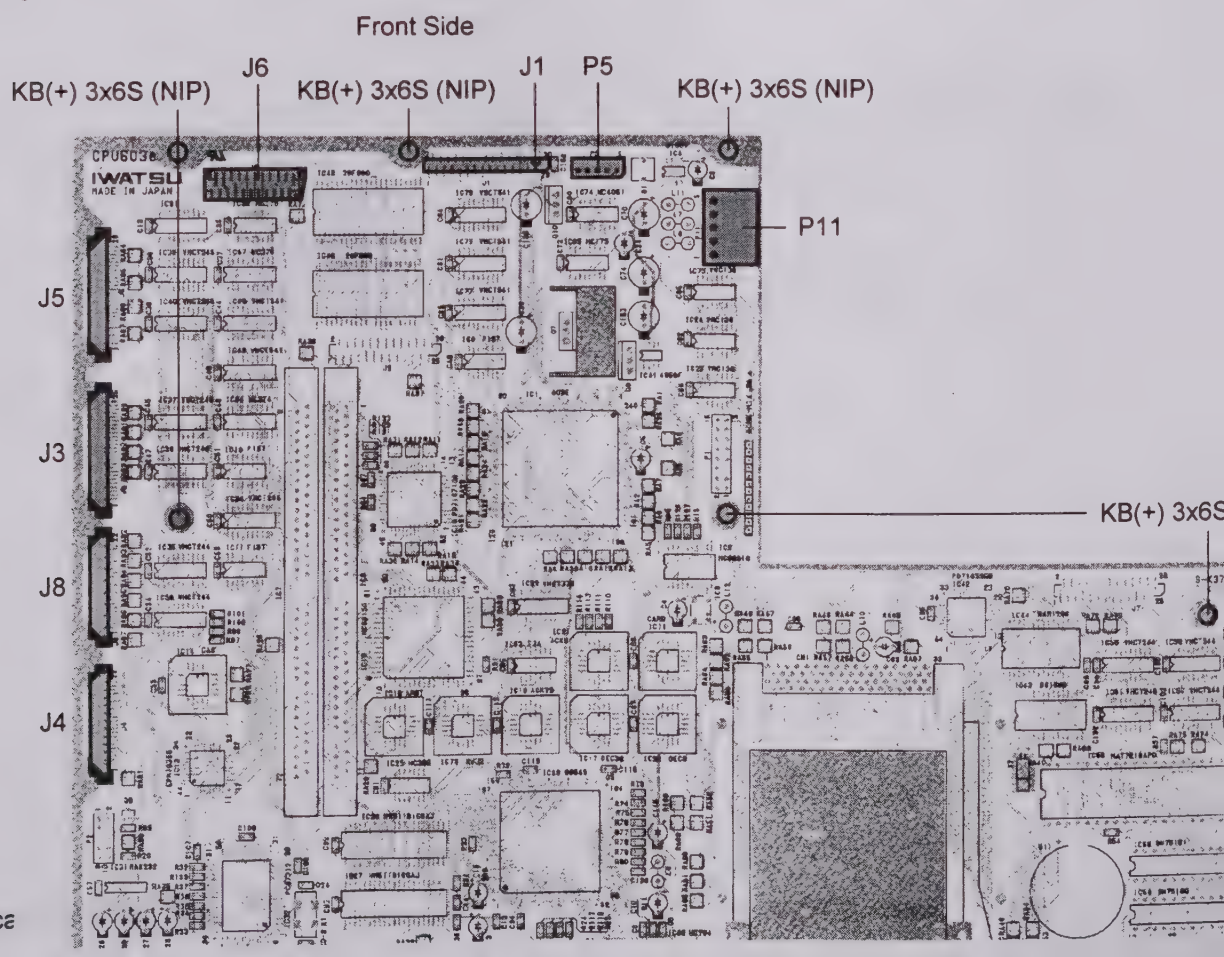

[E2]

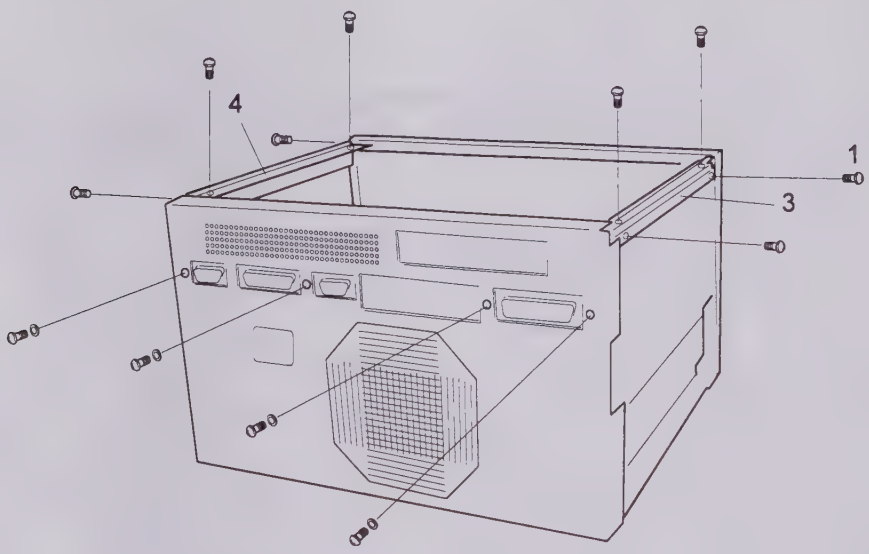

[E3]

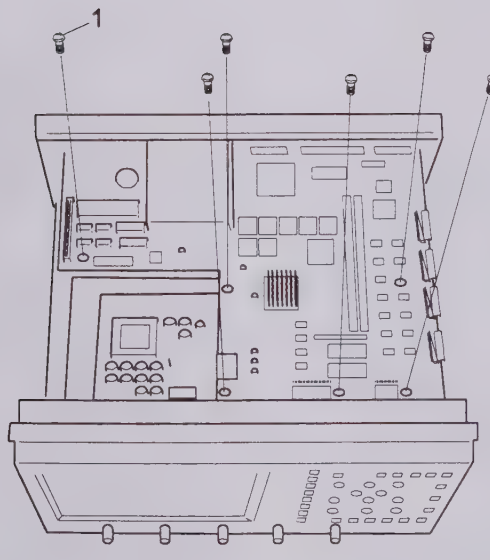

CPU Board Replaceable Parts

Item	IWATSU Part Number	Quantity	Description
1	MKB130062	18.0	Screw M3x6
2	21302-5610	1.0	CPU BOARD ASSY
3	KBA784421	1.0	TOP FRAME L
4	KBA784511	1.0	TOP FRAME R

F. Removal of the Main Board

Remove the upper and bottom covers.

[Note] Remove the cables on the Main Board and next the screws on it.

- F1 a/b : Remove the four FFC cables (20J1/26pin, 20J4/22pin, 20J2/26pin, 20J3/22pin).).
- F1 a/b : Remove the Signal out connector (16J2).
- F1 a/b : Remove the 7P power connectors (21J1, 21J2, 21J3) while pressing the stopper of 21J1 and 21J2.
- F1 a/b : Remove the two support PNC20 from the main board.
- F1 a/b : Remove the nine M3 x 6 screws (on the Main Board).
- Remove the main board by lifting its rear side slightly and sliding it rearward.

[F1a]

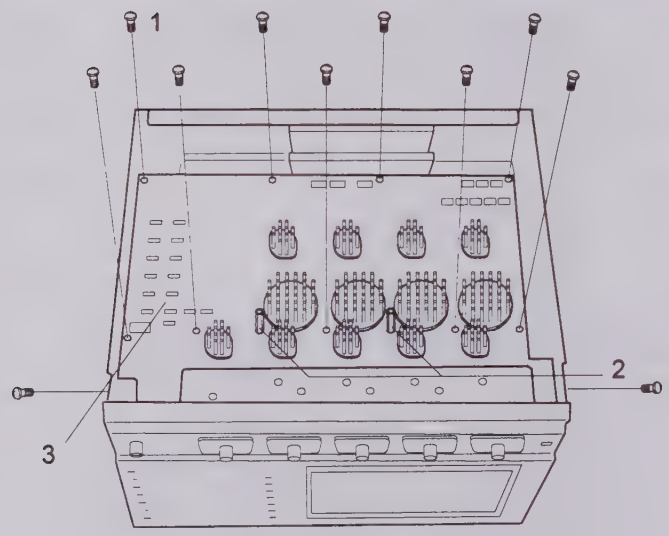

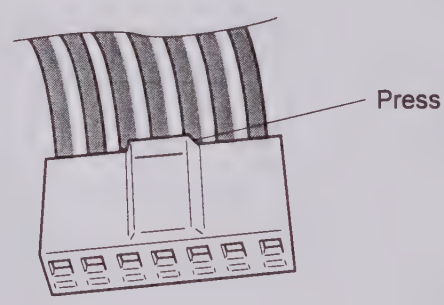

21J1, 21J2

Main Board Replaceable Parts

Item	Part Number	Quantity	Description
1	MKB130062	11.0	Screw M3x6
2	MZT902191	2.0	Metallic support PNC20
3	213025605	1.0	MAIN BOARD ASSYSee Fig [F2] LT344/344L
	213025650	1.0	LT342/342L
	213025648	1.0	LT322
	213025670	1.0	LT224

[F1b]

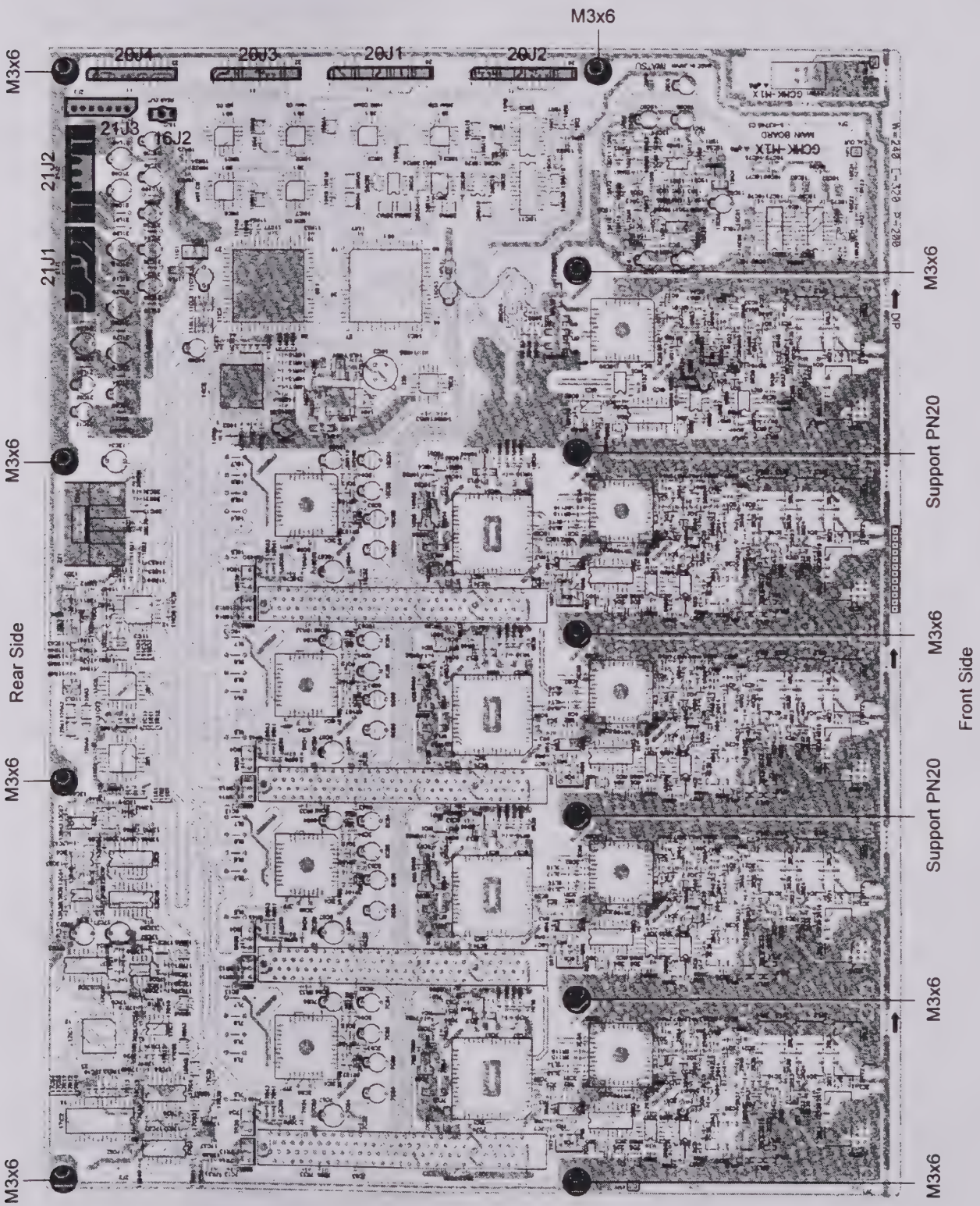
M3x6
M3x6
M3x6
M3x6
M3x6
M3x6
M3x6
M3x6
20J4
20J3
20J1
20J2
21J3
16J2
21J2
21J1
Support PN20
Support PN20
Rear Side
Front Side
DP

[F2]

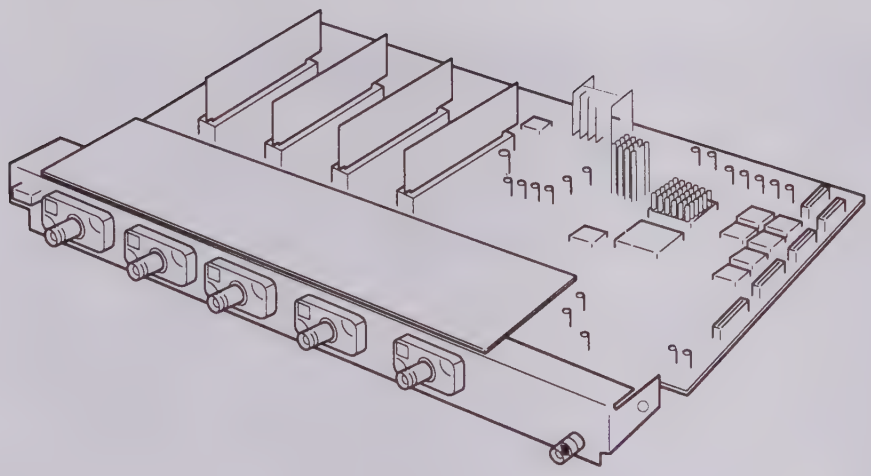

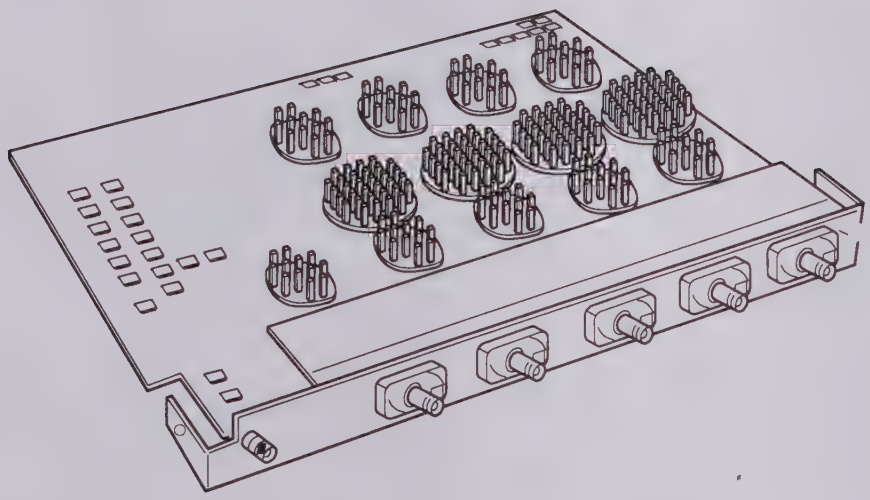

G. Removal of the Power Supply Assembly

Remove the upper and bottom covers.

Remove the processor assembly.

Remove the main assembly.

- G1 : Remove the Harnessing belt on the main frame.
- G2 : Remove the connector (CN7) on the Power board from the fan.
- G2, G3 : Remove the seven M3 x 8 screws (2 on the rear inlet/4 on either side/1 on the top).

[G1]

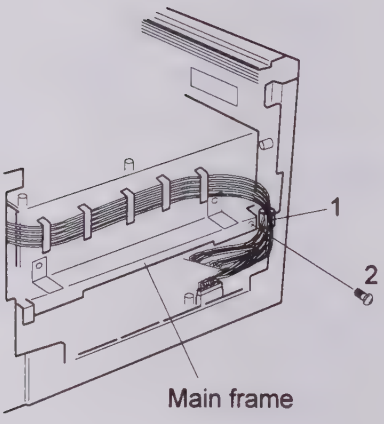

[G3]

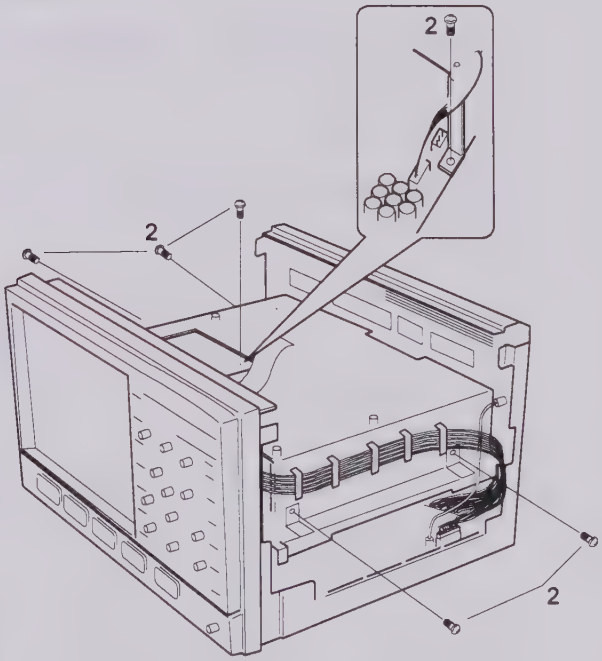

[G2]

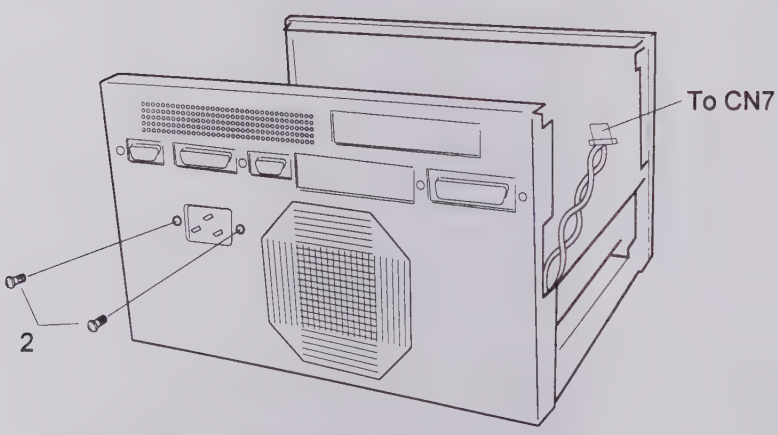

Power Board Replaceable Parts

Item	IWATSU Part Number	Quantity	Description
1	MHK001541	1.0	Harnessing belt SL-9N
2	MKB130082	8.0	Screw M3x8

3	21302-5615	1.0	Power Board ASSY

H. Removal of the Front Panel Assembly

Remove the upper and bottom covers.

Remove the processor assembly.

Remove the main assembly.

Remove the power supply assembly.

- H1 : Remove the two M3x6 screws that secure the front panel assembly and the main frame.
- H1 : Remove the three M3 x 6 screws on the each side frames R and L.
- H2 : Inverter plate: Remove the two M3 x 6 screws.
- H2 : Inverter board: Remove the two tap tight M2 x 6 screws.
- H2 : Remove the eight a screws that secure the BEZEL and FRONT FRAM A/B.

LCD Assembly : H3, H4, H5

- H3 : Remove the four LCD mounting screws.
- H4 : Remove the connection board between LCD and KEY BOARD while holding the connectors.

FRONT PANEL ASSY : Remove the knobs.

- H6 : Remove the nine screws that secure BEZEL and KEY BOARD.

  Caution : knob12 UL-1(4)TIME/DIV, VOLTS/DIV, ZOOMx2

  knob09 UL-1(7)

  How to insert knobs : Match the straight portions.

[H1]

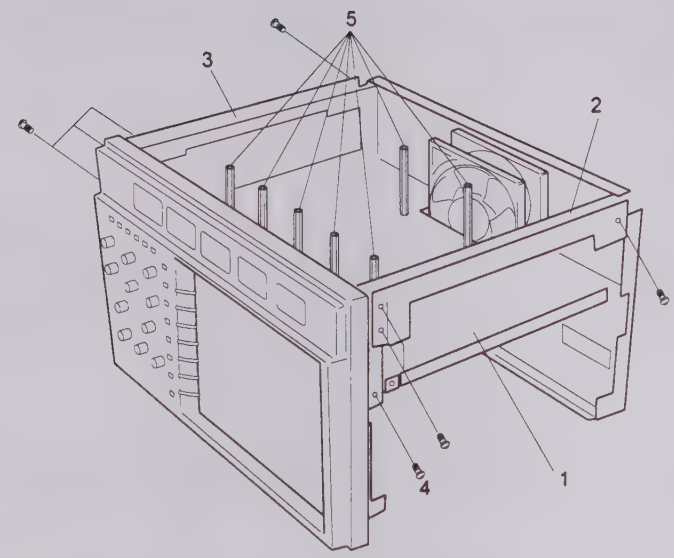

H1 Replaceable Parts

Item	IWATSU Part Number	Quantity	Description
1	KBA784011	1.0	MAIN FRAME
2	KBA784911	1.0	SIDE FRAME L
3	KBA785011	1.0	SIDE FRAME R
4	MKD130061	4.0	Screw M3x6
5	MZT903161	7.0	Metallic support PSC60

[H2]

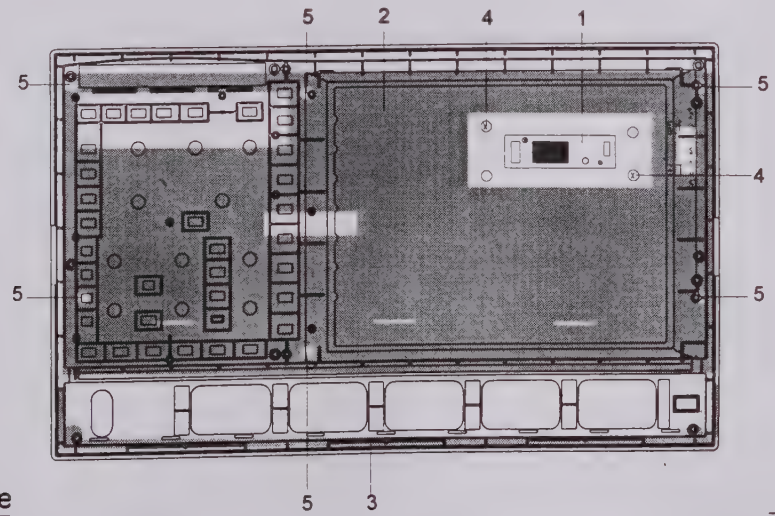

H2 Replaceable

Item	IWATSU Part Number	Quantity	Description
1	KPL143211	1.0	INVERTER PLATE UL-1
2	KBA784121	1.0	FRONT FRAME A
3	KBA784211	1.0	FRONT FRAME B
4	MKB130062	2.0	Screw M3x6
5	MSQ901661	8.0	Screw TT2(+) 3x8S

LCD Assembly

[H3]

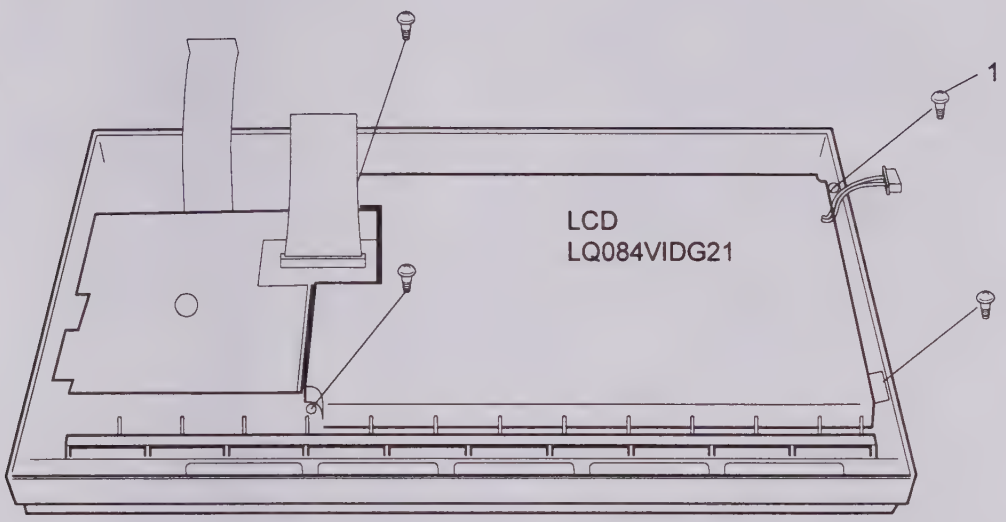

[H4]

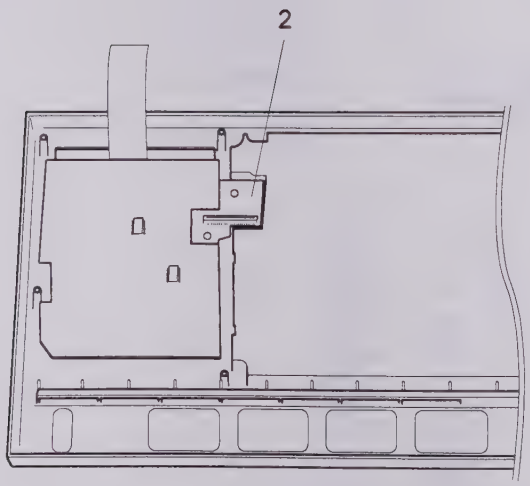

[H5]

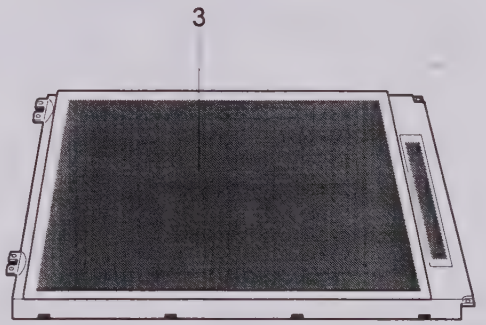

H3 to H5 Replaceable Parts

Item	IWATSU Part Number	Quantity	Description
1	MSQ903511	4.0	Screw PKB 2.5x8S
2	21302-5615	1.0	LCD CONNECTOR BOARD UL-M
3	21302-5680	1.0	LT LCD UNIT See Fig [H5]

FRONT PANEL ASSY
[H6]

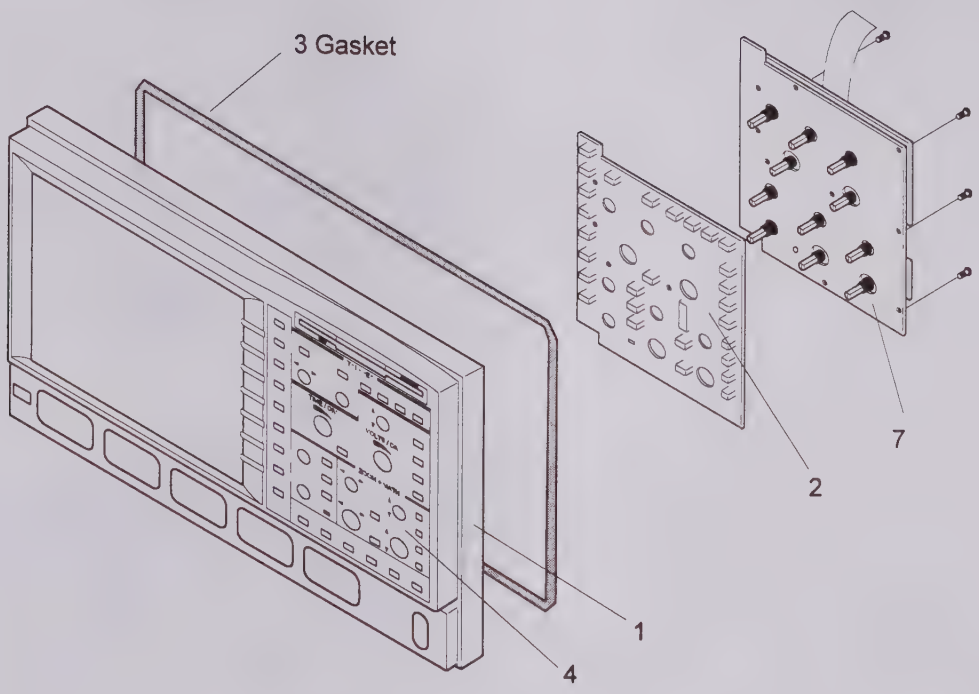

[H7]

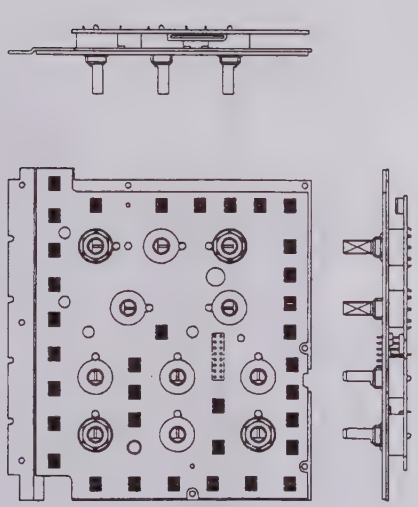

[H8]

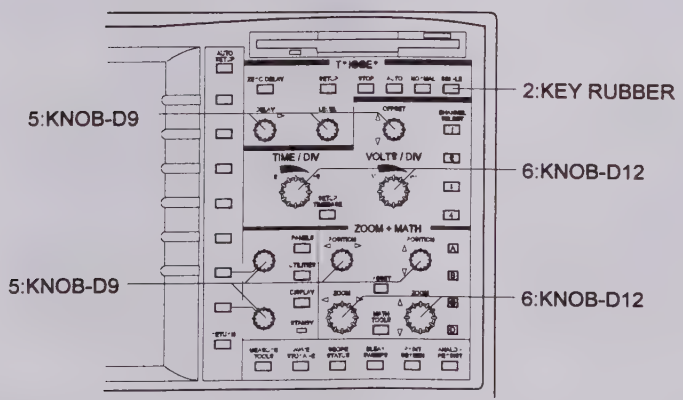

LT344/224 FRONT PANEL ASSY

Item	IWATSU Part Number	Quantity	Description
1	KCM140911	1.0	BEZEL FND14 UL-1
2	KGM029711	1.0	FND14 KEY PUBBER UL-I
3	MZT007871	1.0	GASKET UC-3E0564 UL-I
4	KPA219011	1.0	LT344 CONTROL PANEL UL-I
5	KCM141021	7.0	KNOBE-D9 UL-I
6	KCM141121	4.0	KNOBE-D12 UL-I
7	xxxxxxxxx	1.0	PANEL & KEY BOARD See Fig [H7]
1 to 7	21302-5678	1.0	LTxx4 FRONT PANEL(4CH) See Fig [H6]

LT342/322 FRONT PANEL ASSY

Item	IWATSU Part Number	Quantity	Description
1	KCM143211	1.0	BEZEL FND12 UL-1
2	KGM029711	1.0	FND14 KEY PUBBER UL-I
3	MZT007871	1.0	GASKET UC-3E0564 UL-I
4	KPA219111	1.0	LT342 CONTROL PANEL UL-I
5	KCM141021	7.0	KNOBE-D9 UL-I
6	KCM141121	4.0	KNOBE-D12 UL-I
7	xxxxxxxxx	1.0	PANEL & KEY BOARD See Fig [H7]
1 to 7	21302-5679	1.0	LTxx2 FRONT PANEL(2CH) See Fig [H6]

I. Removal of the Rear Panel Assembly

Remove the upper and bottom covers.

Remove the processor assembly.

Remove the main assembly.

Remove the power supply assembly.

- I1 : Remove the rear panel assembly and four M3 x 6 screws from the main frame.
- I2 : Remove four fan motor fastening M3 x 6 screws.

[I1]

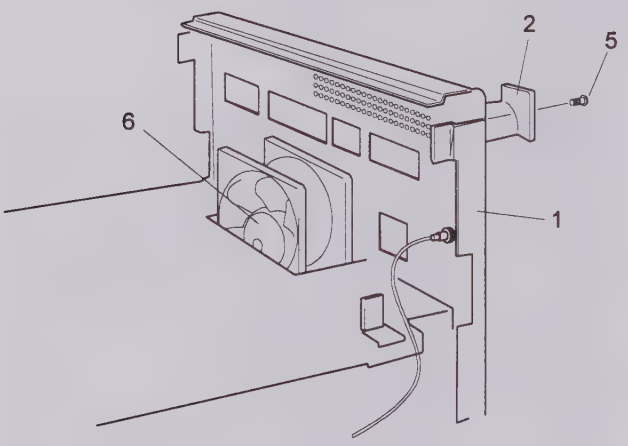

[I2]

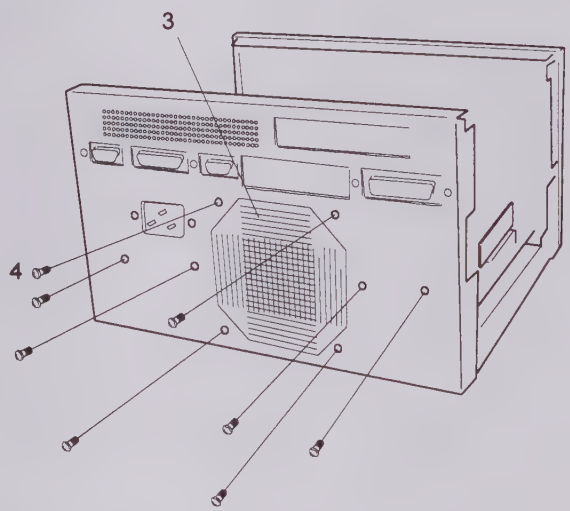

Rear Panel Replaceable Parts

Item	IWATSU Part Number	Quantity	Description
1	KBA785111	1.0	REAR FRAME
2	KCM138221	4.0	Cord rack 78 UL-I
3	KSN091911	1.0	WIRE NET(MESH #5)
4	MKB130062	8.0	Screw M3x6
5	MSM140101	4.0	Screw SM1-4X10
6	DMT620701	1.0	FAN 109R1212M114

Assembly Note :

- **Fan** : Check the fan cable direction. Note the air flow, the fan extracts air from the unit and expels it.

- **Feet** : Check that the lower feet and rear cord rack are aligned and properly tightened before re-assembly.

- **Floppy** : Adjust the floppy position to obtain the front face tangential to face of the front panel. Check that the door is moving freely and shuts correctly.
  Insert a floppy and eject it to check the mechanism.

- **Front Panel** : Check that knobs rotate freely, are the right size and in the right place. Do not forget the gasket, see Fig [H6].

- **Main Board** :The main card must be parallel and tacked against the bend of the lower cover. Being careful not to bend the board or damage components underneath.

- **Processor** : Check that the memory card insertion guide is correctly inserted in the front panel.

- **Printer** : If the graphic printer is used, before closing don't forget to plug input cable to the option and the driver cable to the processor card.

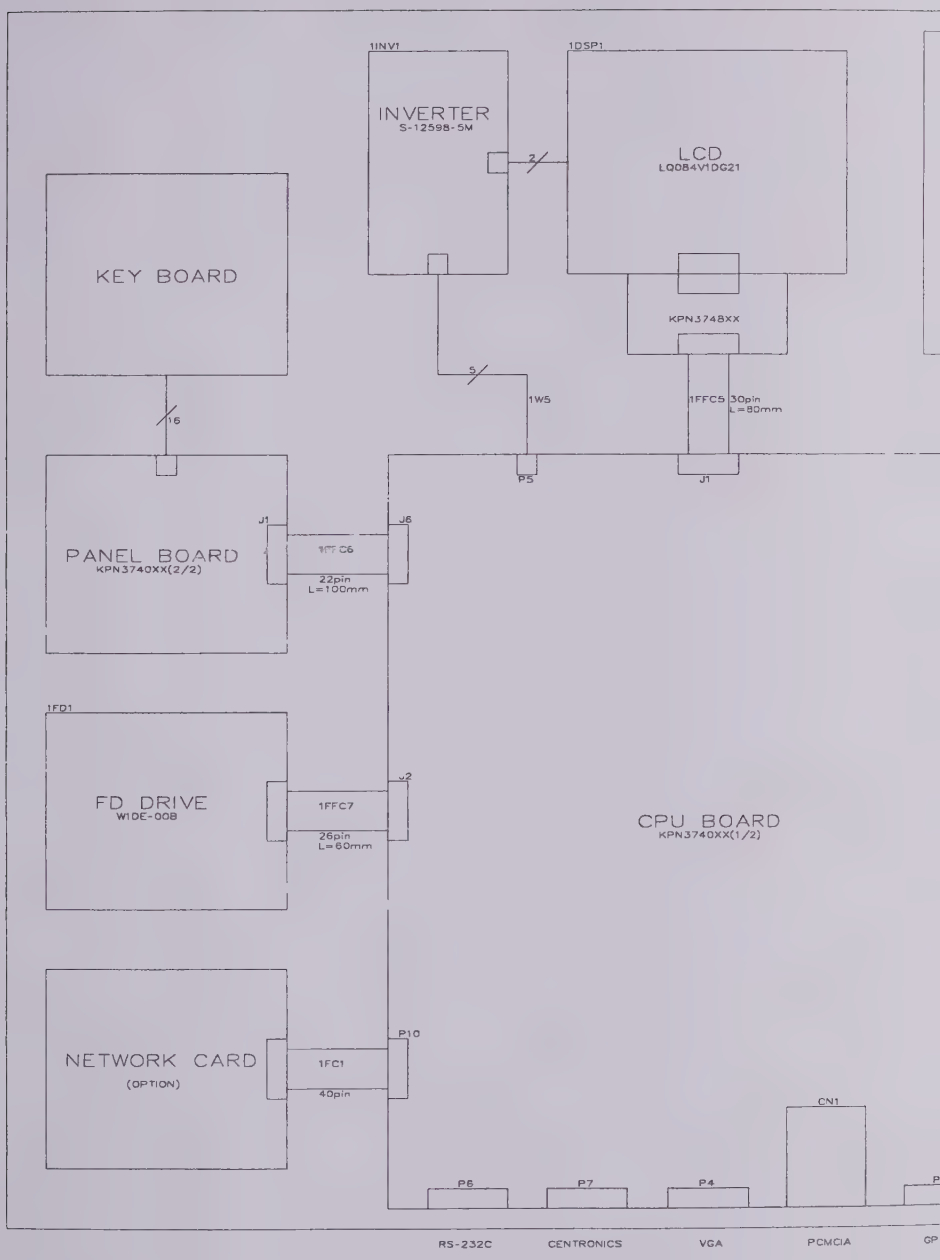
1INV1
INVERTER
S-12598-5M
1DSP1
LCD
LQ084V1DG21
2
KEY BOARD
KPN3748XX
5
1W5
1FFC5 30pin
L=80mm
16
P5
J1
PANEL BOARD
KPN3740XX(2/2)
J1
J6
1FFC6
22pin
L=100mm
1FD1
FD DRIVE
W1DE-008
J2
1FFC7
26pin
L=80mm
CPU BOARD
KPN3740XX(1/2)
NETWORK CARD
(OPTION)
P10
1FC1
40pin
CN1
P6
P7
P4
RS-232C
CENTRONICS
VGA
PCMCIA

OVE

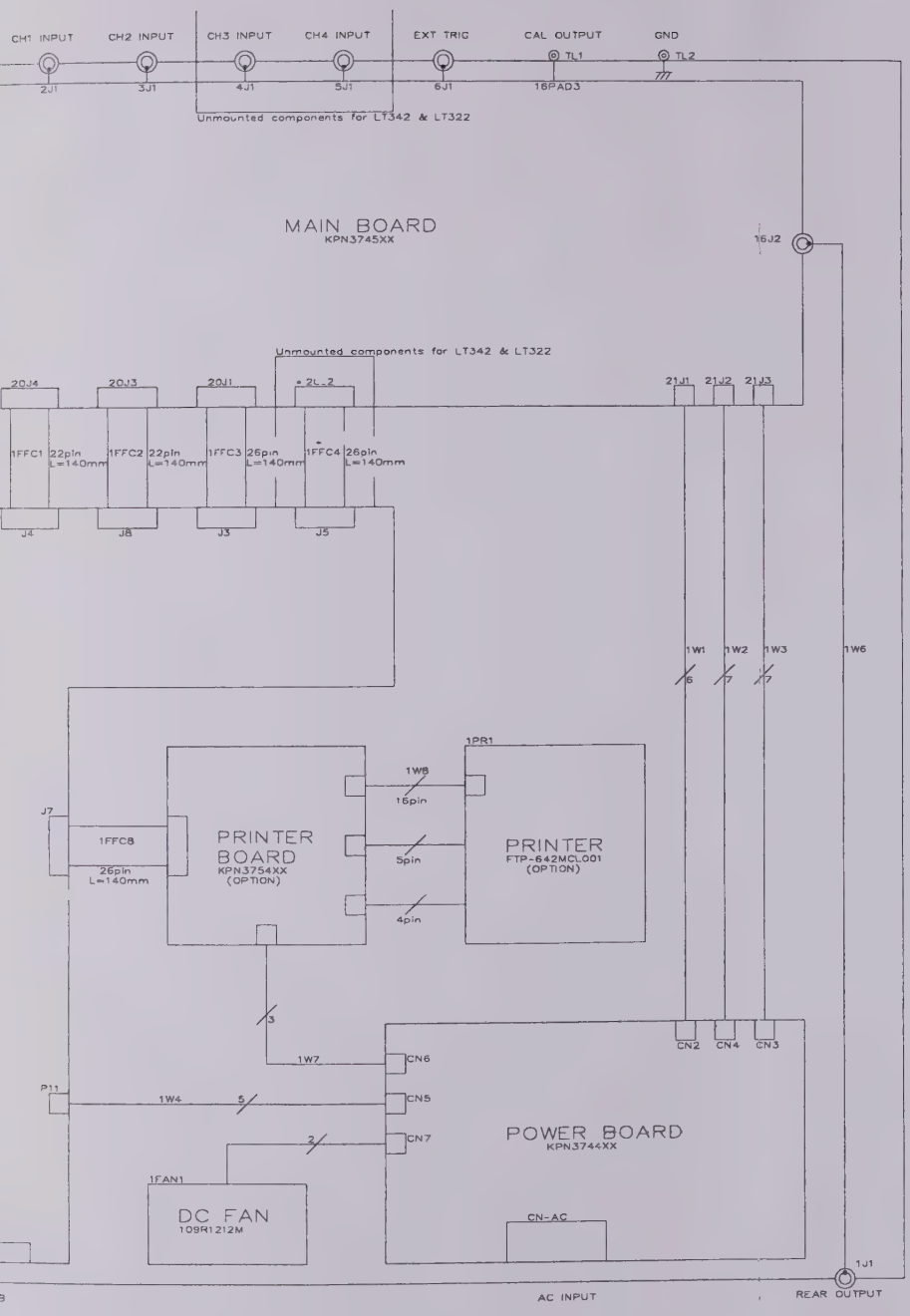
CH1 INPUT
CH2 INPUT
CH3 INPUT
CH4 INPUT
EXT TRIG
CAL OUTPUT
GND
TL1
TL2
2J1
3J1
4J1
5J1
6J1
16PAD3
Unmounted components for LT342 & LT322
MAIN BOARD
KPN3745XX
16J2
Unmounted components for LT342 & LT322
20J4
20J3
20J1
* 2L-2
21J1
21J2
21J3
1FFC1 22pin L=140mm
1FFC2 22pin L=140mm
1FFC3 26pin L=140mm
1FFC4 26pin L=140mm
J4
J8
J3
J5
1W1
1W2
1W3
1W6
1PR1
1W8
16pin
J7
1FFC8
26pin
L=140mm
PRINTER BOARD
KPN3754XX
(OPTION)
5pin
4pin
PRINTER
FTP-642MCL001
(OPTION)
3
1W7
CN6
P11
1W4
5
CN5
2
CN7
CN2
CN4
CN3
POWER BOARD
KPN3744XX
1FAN1
DC FAN
109R1212M
CN-AC
1J1
AC INPUT
REAR OUTPUT

ALL (1)

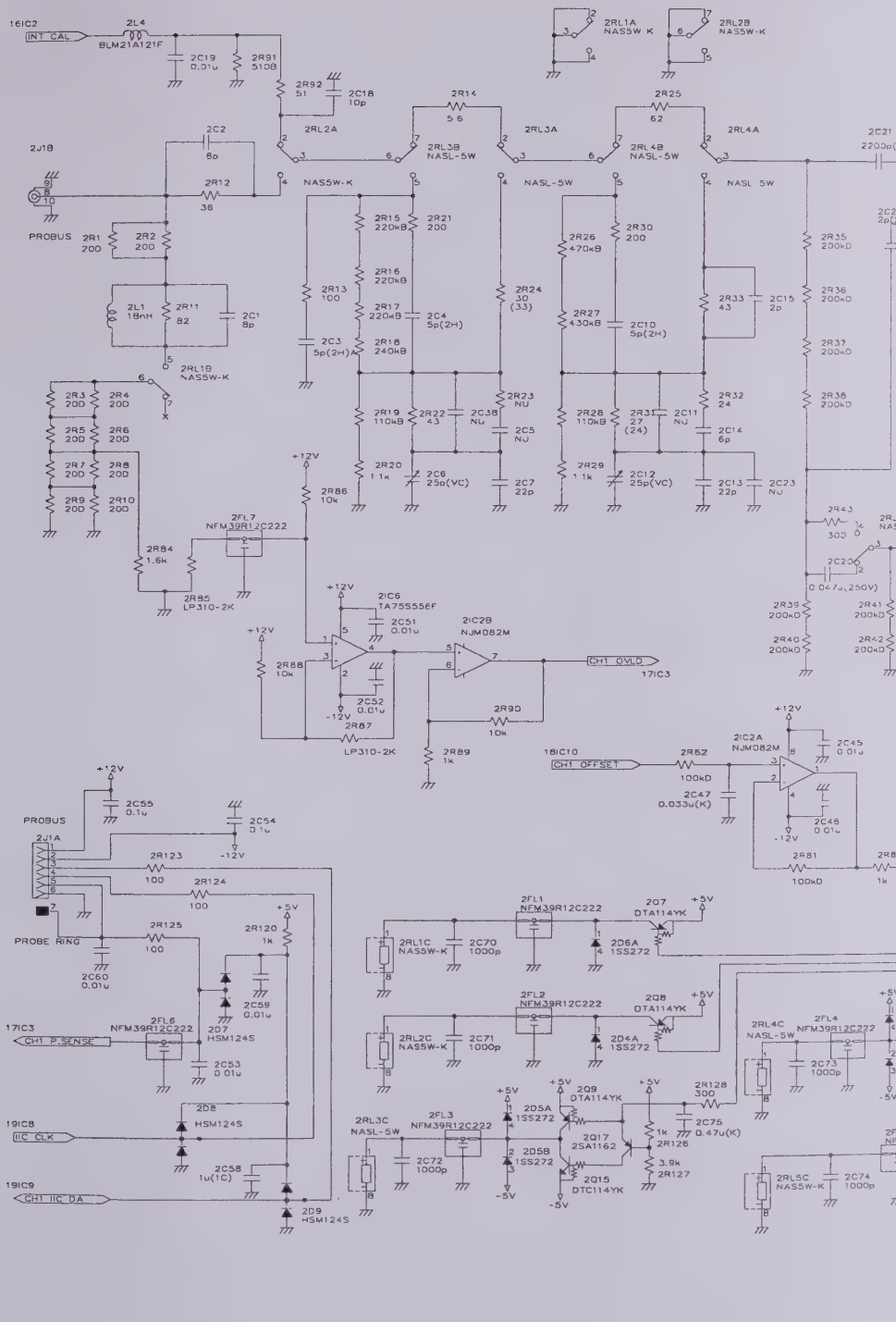
INT CAL
PROBUS
PROBE RING
NAS5W-K
NASL-5W
+12V
-12V
+5V
CH1 OVLD
CH1 OFFSET
CH1 P.SENSE
IIC CLK
CH1 IIC DA
NJM082M
TA75S556F
DTA114YK
2SA1162
DTC114YK
HSM124S
1SS272
LP310-2K
NFM39R12C222

CH1 FR

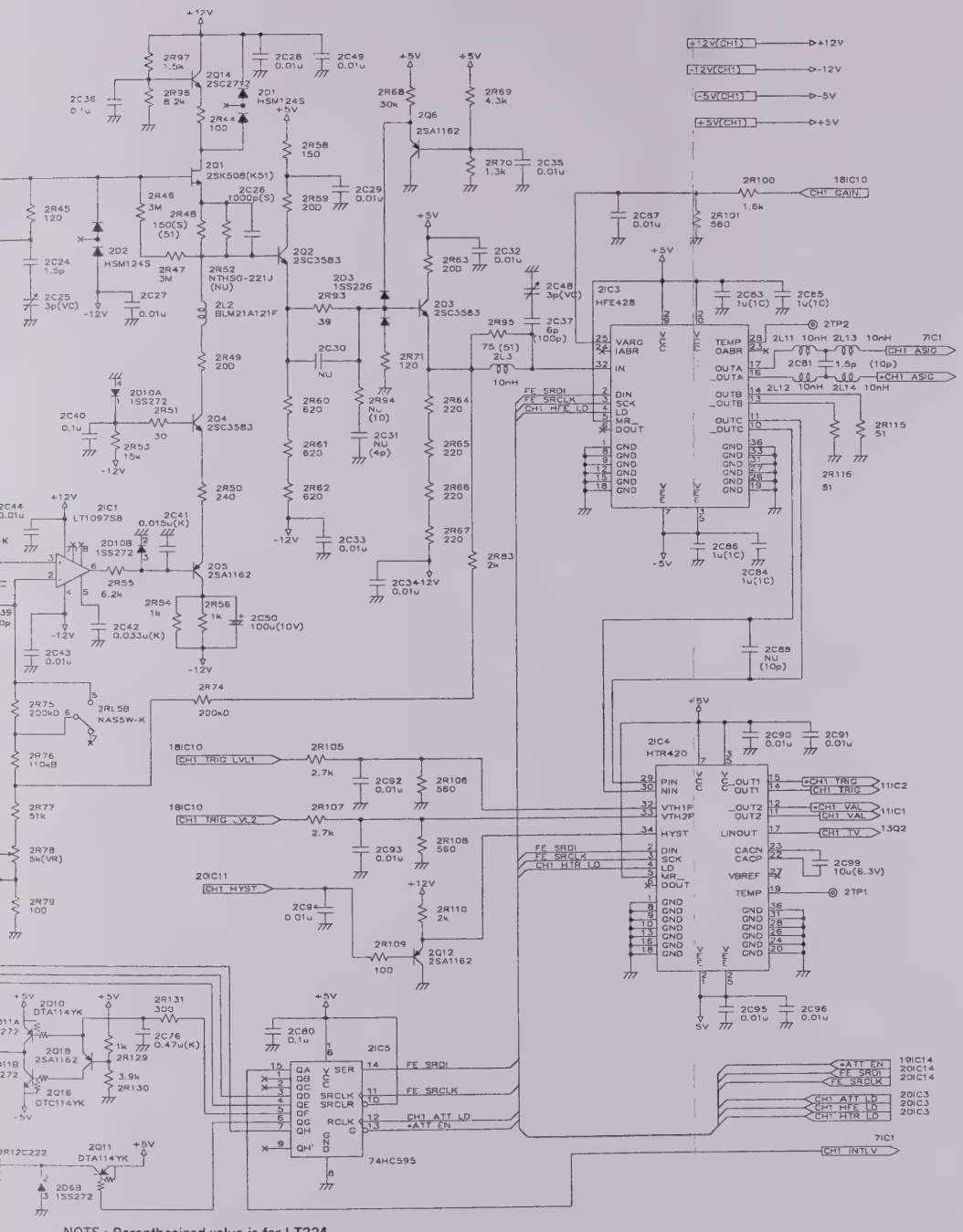

NOTE : Parenthesized value is for LT224

ONT END (2)

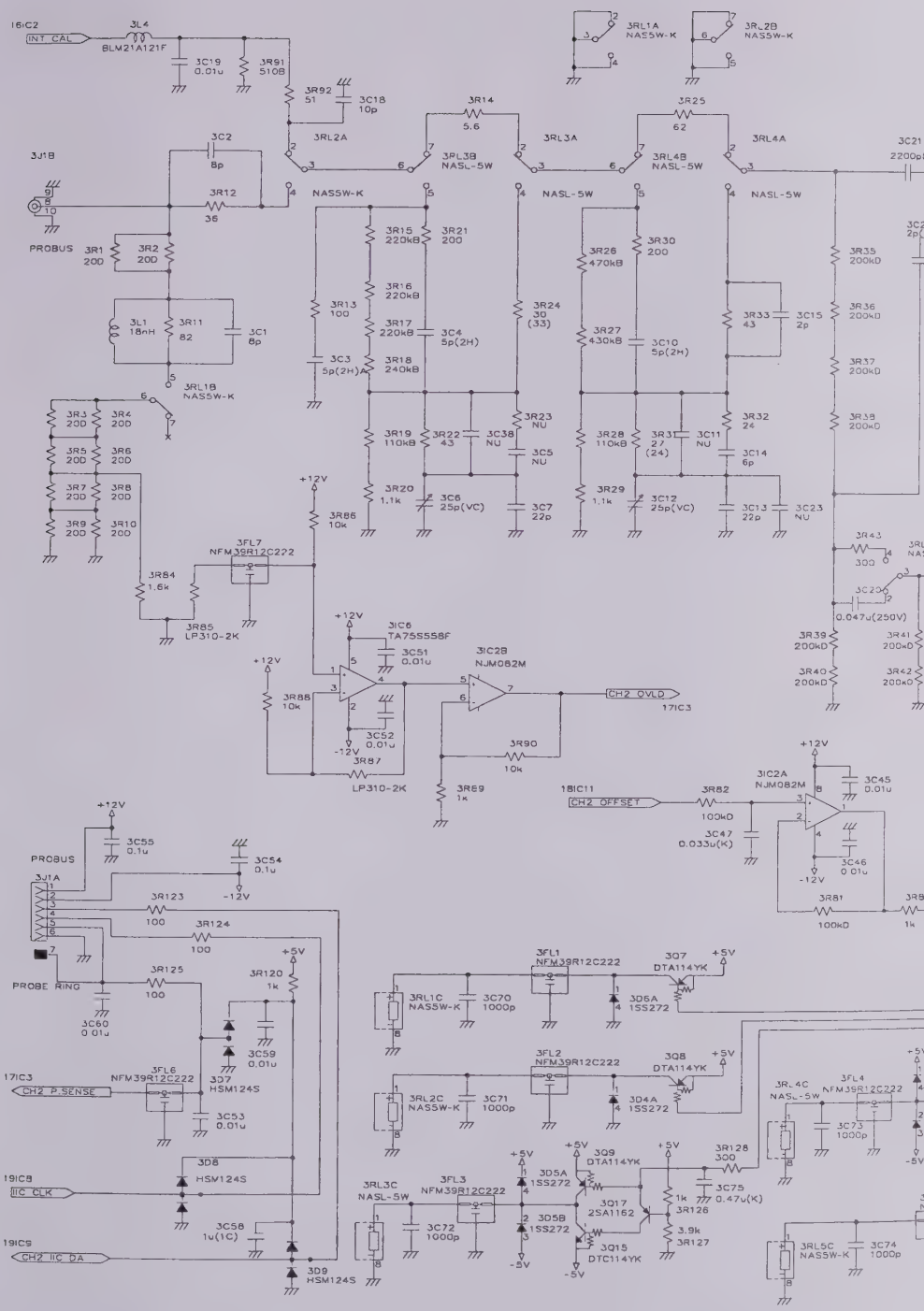
16IC2
INT CAL
3L4
BLM21A121F
3C19 0.01u
3R91 510Ω
3R92 51
3C18 10p
3RL2A
3RL1A NAS5W-K
3RL2B NAS5W-K
3R14 5.6
3RL3A
3R25 62
3RL4A
3C21 2200p
3J1B
3C2 8p
3R12 36
NAS5W-K
NASL-5W
PROBUS
3R1 200
3R2 200
3L1 18nH
3R11 82
3C1 8p
3RL1B NAS5W-K
3R3 200
3R4 200
3R5 200
3R6 200
3R7 200
3R8 200
3R9 200
3R10 200
3R15 220kB
3R16 220kB
3R17 220kB
3R18 240kB
3R13 100
3C3 5p(2H)
3C4 5p(2H)
3R21 200
3R24 30 (33)
3R26 470kB
3R27 430kB
3R28 110kB
3R29 1.1k
3R30 200
3C10 5p(2H)
3R31 27 (24)
3C11 NU
3C12 25p(VC)
3R33 43
3C15 2p
3R32 24
3C14 6p
3C13 22p
3C23 NU
3R35 200kΩ
3R36 200kΩ
3R37 200kΩ
3R39 200kΩ
3R19 110kB
3R22 43
3C38 NU
3C5 NU
3C6 25p(VC)
3C7 22p
3R20 1.1k
3R23 NU
+12V
3R86 10k
3FL7 NFM39R12C222
3R84 1.6k
3R85 LP310-2K
3R43 300
3C20 0.047u(250V)
3R39 200kΩ
3R40 200kΩ
3R41 200kΩ
3R42 200kΩ
3IC5 TA7555S8F
3C51 0.01u
3C52 0.01u
-12V
3R87 LP310-2K
3IC2B NJM082M
CH2 OVLD
17IC3
3R90 10k
3R89 1k
18IC11
CH2 OFFSET
3R82 100kΩ
3IC2A NJM082M
3C45 0.01u
3C47 0.033u(K)
3C46 0.01u
3R81 100kΩ
3C55 0.1u
3C54 0.1u
3J1A
3R123 100
3R124 100
3R125 100
3R120 1k
+5V
PROBE RING
3C60 0.01u
3C59 0.01u
3FL6 NFM39R12C222
17IC3
CH2 P.SENSE
3C53 0.01u
3D7 HSM124S
3D8 HSM124S
19IC8
IIC CLK
3C58 1u(1C)
19IC9
CH2 IIC DA
3D9 HSM124S
3FL1 NFM39R12C222
3Q7 DTA114YK
3RL1C NAS5W-K
3C70 1000p
3D6A 1SS272
3FL2 NFM39R12C222
3Q8 DTA114YK
3RL2C NAS5W-K
3C71 1000p
3D4A 1SS272
3R4C NASL-5W
3FL4 NFM39R12C222
3C73 1000p
3RL3C NASL-5W
3FL3 NFM39R12C222
3C72 1000p
3D5A 1SS272
3D5B 1SS272
3Q9 DTA114YK
3Q17 2SA1162
3Q15 DTC114YK
3R128 300
3C75 0.47u(K)
3R126 1k
3R127 3.9k
-5V
3RL5C NAS5W-K
3C74 1000p

CH2 FRO

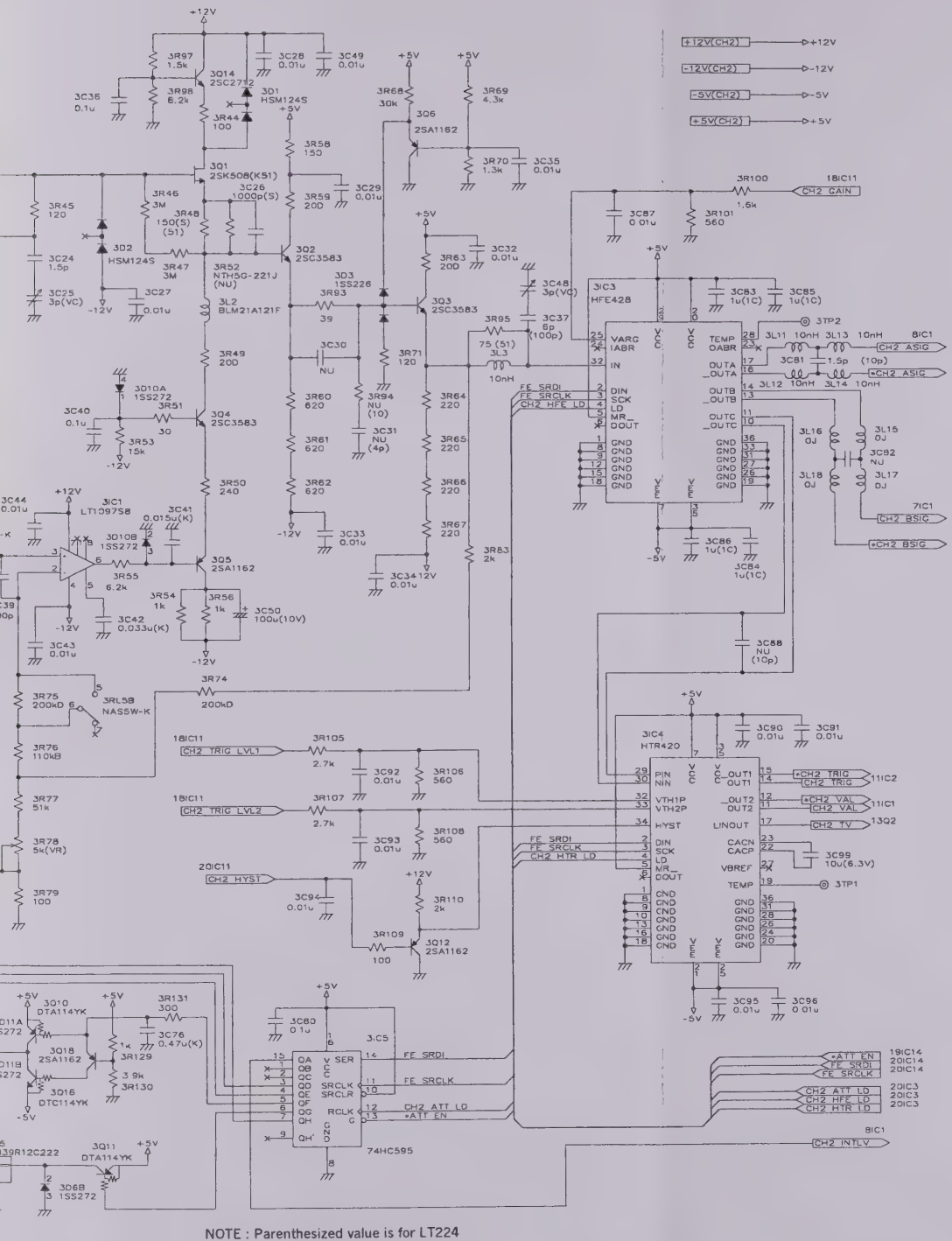

NOTE : Parenthesized value is for LT224

NT END (3)

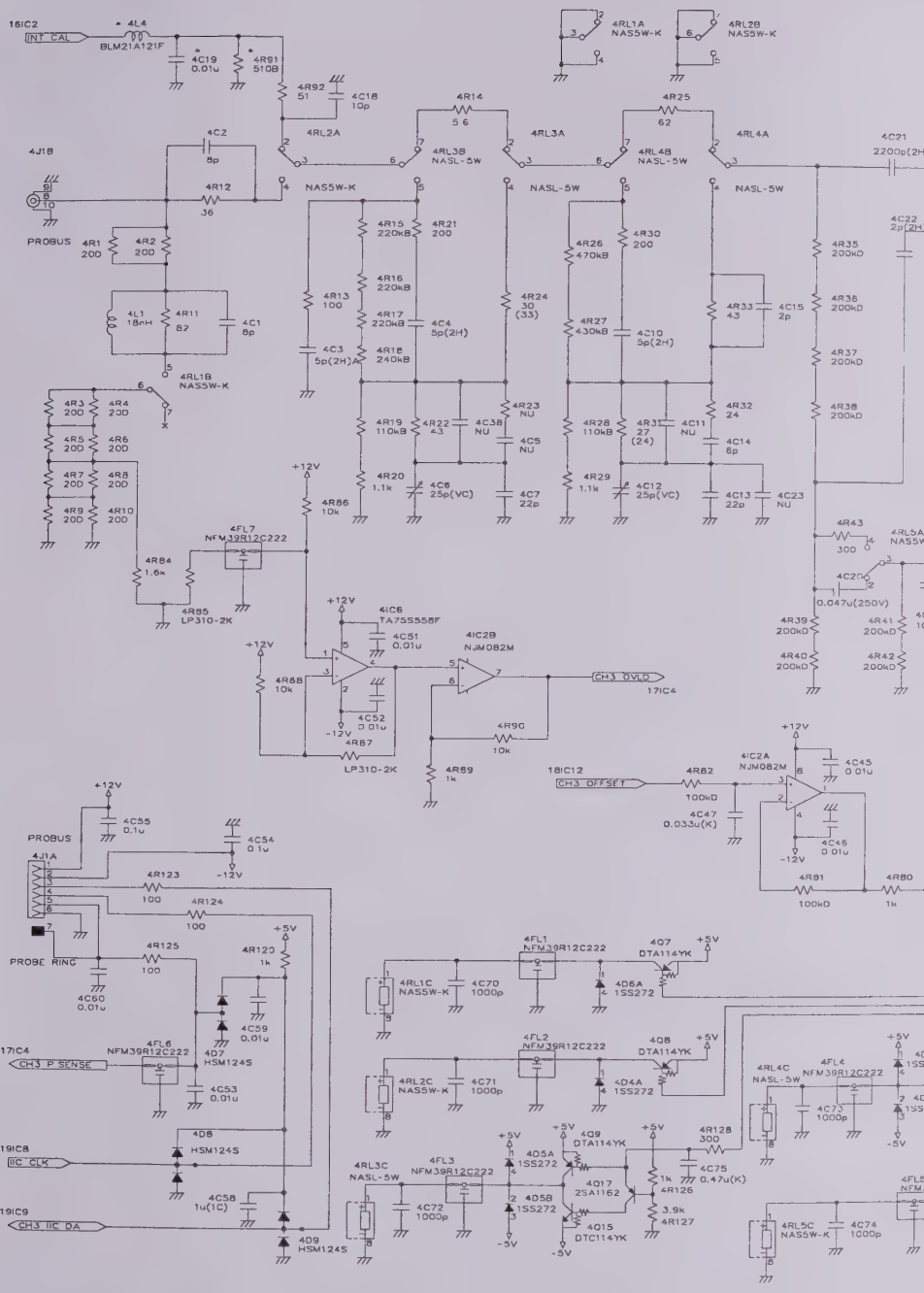
INT CAL
BLM21A121F
4C19 0.01u
4R91 510Ω
4R92 51
4C18 10p
4RL2A
4RL3B NASL-5W
4RL3A
4RL4B NASL-5W
4RL4A
4RL1A NAS5W-K
4RL2B NAS5W-K
4R14 56
4R25 62
4C2 5p
4J1B
4R12 36
NAS5W-K
NASL-5W
PROBUS
4R1 200
4R2 200
4L1 18nH
4R11 82
4C1 8p
4RL1B NAS5W-K
4R3 200
4R4 200
4R5 200
4R6 200
4R7 200
4R8 200
4R9 200
4R10 200
4R15 220kΩ
4R16 220kΩ
4R17 220kΩ
4R18 240kΩ
4R21 200
4C4 5p(2H)
4C3 5p(2H)
4R13 100
4R24 30 (33)
4R19 110kΩ
4R22 43
4C38 NU
4C5 NU
4R20 1.1k
4C6 25p(VC)
4C7 22p
4R23 NU
4R26 470kΩ
4R27 430kΩ
4R28 110kΩ
4R29 1.1k
4R30 200
4C10 5p(2H)
4R31 27 (24)
4C11 NU
4C12 25p(VC)
4R32 24
4C14 6p
4C13 22p
4C23 NU
4R33 43
4C15 2p
4R35 200kΩ
4R36 200kΩ
4R37 200kΩ
4R38 200kΩ
4C21 2200p(2H
4C22 2p(2H
+12V
4R86 10k
4FL7 NFM39R12C222
4R84 1.6k
4R85 LP310-2K
4IC6 TA75S558F
4C51 0.01u
4IC2B NJM082M
4R88 10k
4C52 0.01u
-12V
4R87 LP310-2K
4R90 10k
4R89 1k
CH3 OVLO
17IC4
4R43 300
4RL5A NAS5W
4C20 0.047u(250V)
4R39 200kΩ
4R40 200kΩ
4R41 200kΩ
4R42 200kΩ
18IC12
CH3 OFFSET
4R82 100kΩ
4C47 0.033u(K)
4IC2A NJM082M
4C45 0.01u
4C46 0.01u
4R81 100kΩ
4R80 1k
4C55 0.1u
4C54 0.1u
4J1A
4R123 100
4R124 100
PROBE RING
4R125 100
4C60 0.01u
4R120 1k
+5V
4C59 0.01u
4FL6 NFM39R12C222
17IC4
CH3 P SENSE
4D7 HSM124S
4C53 0.01u
4D8 HSM124S
19IC8
IIC CLK
4C58 1u(1C)
19IC9
CH3 IIC DA
4D9 HSM124S
4FL1 NFM39R12C222
4Q7 DTA114YK
4RL1C NAS5W-K
4C70 1000p
4D6A 1SS272
4FL2 NFM39R12C222
4Q8 DTA114YK
4RL2C NAS5W-K
4C71 1000p
4D4A 1SS272
4RL4C NASL-5W
4FL4 NFM39R12C222
4C73 1000p
4RL3C NASL-5W
4FL3 NFM39R12C222
4C72 1000p
4D5A 1SS272
4Q9 DTA114YK
4Q17 2SA1162
4D5B 1SS272
4Q15 DTC114YK
4R128 300
4C75 0.47u(K)
1k
4R126
3.9k
4R127
4RL5C NAS5W-K
4C74 1000p

CH3 FR

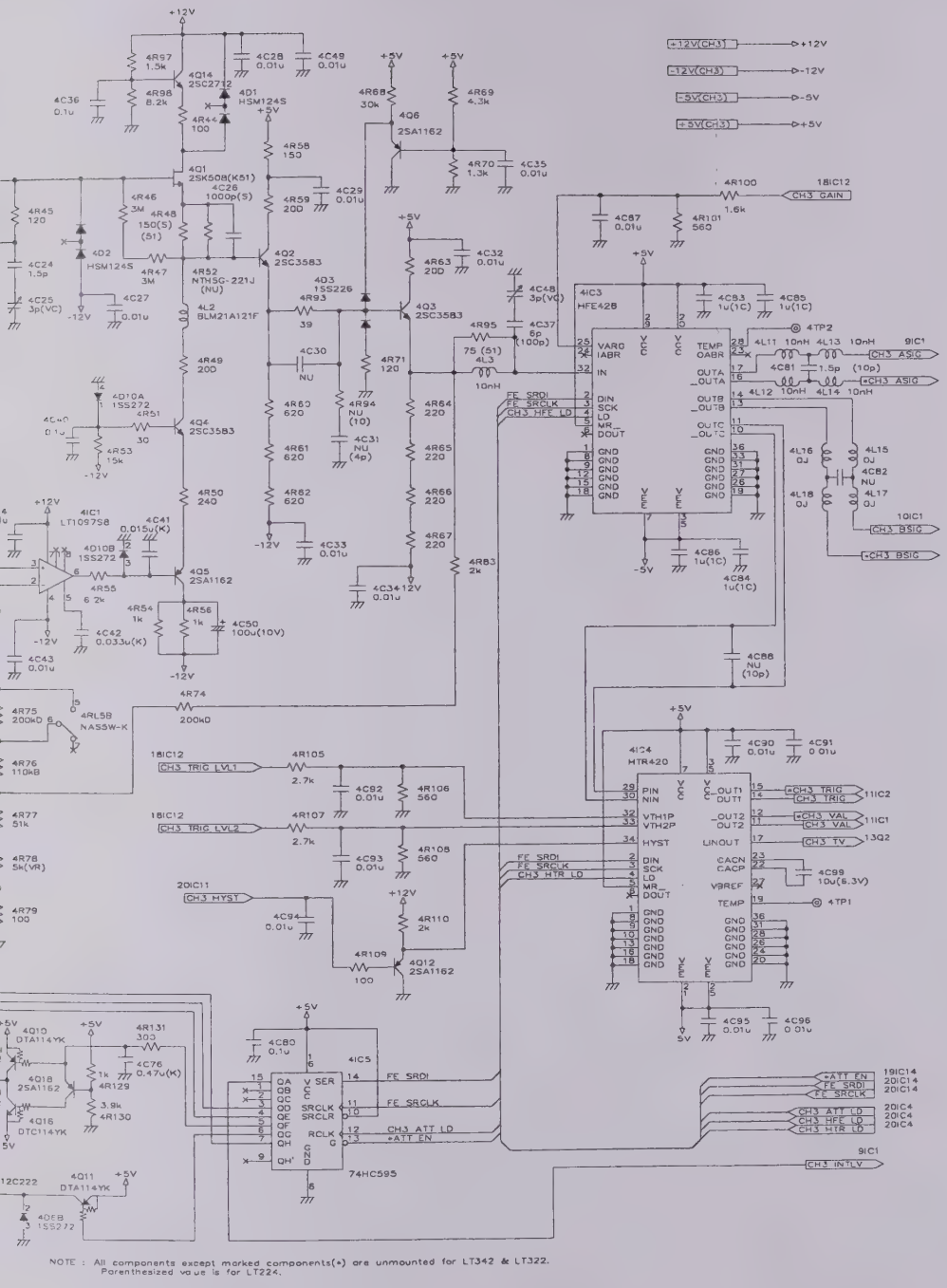
+12V(CH3)
-12V(CH3)
-5V(CH3)
+5V(CH3)
CH3 GAIN
CH3 TRIG LVL1
CH3 TRIG LVL2
CH3 HYST
CH3 ASIG
CH3 BSIG
CH3 INTLV
CH3 ATT LD
CH3 HFE LD
CH3 HTR LD
FE SRDI
FE SRCLK
+ATT EN
74HC595
HFE428
HTR420
LT1097S8
NOTE : All components except marked components(*) are unmounted for LT342 & LT322.
Parenthesized value is for LT224.

ONT END (4)

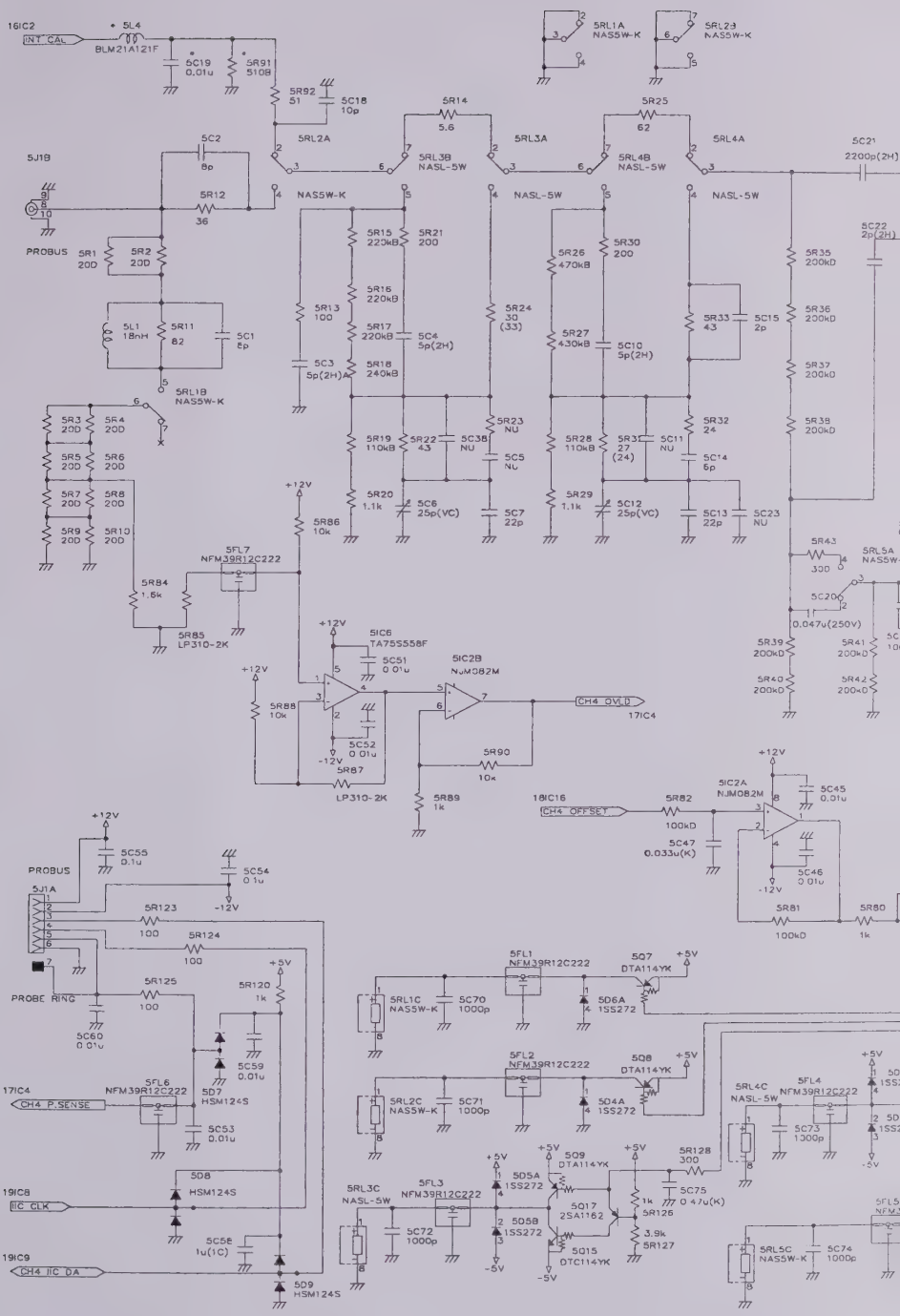
16IC2
INT CAL
5L4
BLM21A121F
5C19
0.01u
5R91
510B
5R92
51
5C18
10p
5RL1A
NAS5W-K
5RL2B
NAS5W-K
5R14
5.6
5R25
62
5RL2A
5RL3A
5RL4A
5RL3B
NASL-5W
5RL4B
NASL-5W
5C21
2200p(2H)
5J1B
5C2
8p
5R12
36
NAS5W-K
NASL-5W
NASL-5W
PROBUS
5R1
20D
5R2
20D
5L1
18nH
5R11
82
5C1
8p
5RL1B
NAS5W-K
5R15
220kB
5R21
200
5R16
220kB
5R17
220kB
5C4
5p(2H)
5R18
240kB
5R13
100
5C3
5p(2H)
5R24
30
(33)
5R26
470kB
5R30
200
5R27
430kB
5C10
5p(2H)
5R33
43
5C15
2p
5R35
200kD
5R36
200kD
5R37
200kD
5R38
200kD
5C22
2p(2H)
5R3
20D
5R4
20D
5R5
20D
5R6
20D
5R7
20D
5R8
20D
5R9
20D
5R10
20D
5R19
110kB
5R22
43
5C38
NU
5R23
NU
5C5
NU
5R20
1.1k
5C6
25p(VC)
5C7
22p
5R28
110kB
5R31
27
(24)
5C11
NU
5R32
24
5C14
6p
5R29
1.1k
5C12
25p(VC)
5C13
22p
5C23
NU
+12V
5R86
10k
5FL7
NFM39R12C222
5R84
1.6k
5R85
LP310-2K
5R43
300
5RL5A
NAS5W-
5C20
0.047u(250V)
5R39
200kD
5R40
200kD
5R41
200kD
5R42
200kD
5IC6
TA75S558F
5C51
0.01u
5IC2B
NJM082M
CH4 OVLD
17IC4
5R88
10k
5C52
0.01u
-12V
5R87
LP310-2K
5R90
10k
5R89
1k
18IC16
CH4 OFFSET
5R82
100kD
5IC2A
NJM082M
5C45
0.01u
5C47
0.033u(K)
5C46
0.01u
5R81
100kD
5R80
1k
5C55
0.1u
5C54
0.1u
5J1A
5R123
100
5R124
100
PROBE RING
5R125
100
5R120
1k
5C60
0.01u
5C59
0.01u
5D7
HSM124S
17IC4
CH4 P.SENSE
5FL6
NFM39R12C222
5C53
0.01u
5D8
HSM124S
19IC8
IIC CLK
5C58
1u(1C)
19IC9
CH4 IIC DA
5D9
HSM124S
5FL1
NFM39R12C222
5Q7
DTA114YK
5RL1C
NAS5W-K
5C70
1000p
5D6A
1SS272
5FL2
NFM39R12C222
5Q8
DTA114YK
5RL2C
NAS5W-K
5C71
1000p
5D4A
1SS272
5RL4C
NASL-5W
5FL4
NFM39R12C222
5C73
1000p
5RL3C
NASL-5W
5FL3
NFM39R12C222
5C72
1000p
5D5A
1SS272
5D9
DTA114YK
5Q17
2SA1162
5D5B
1SS272
5Q15
DTC114YK
5R128
300
5C75
0.47u(K)
5R126
3.9k
5R127
5RL5C
NAS5W-K
5C74
1000p

CH4 FR

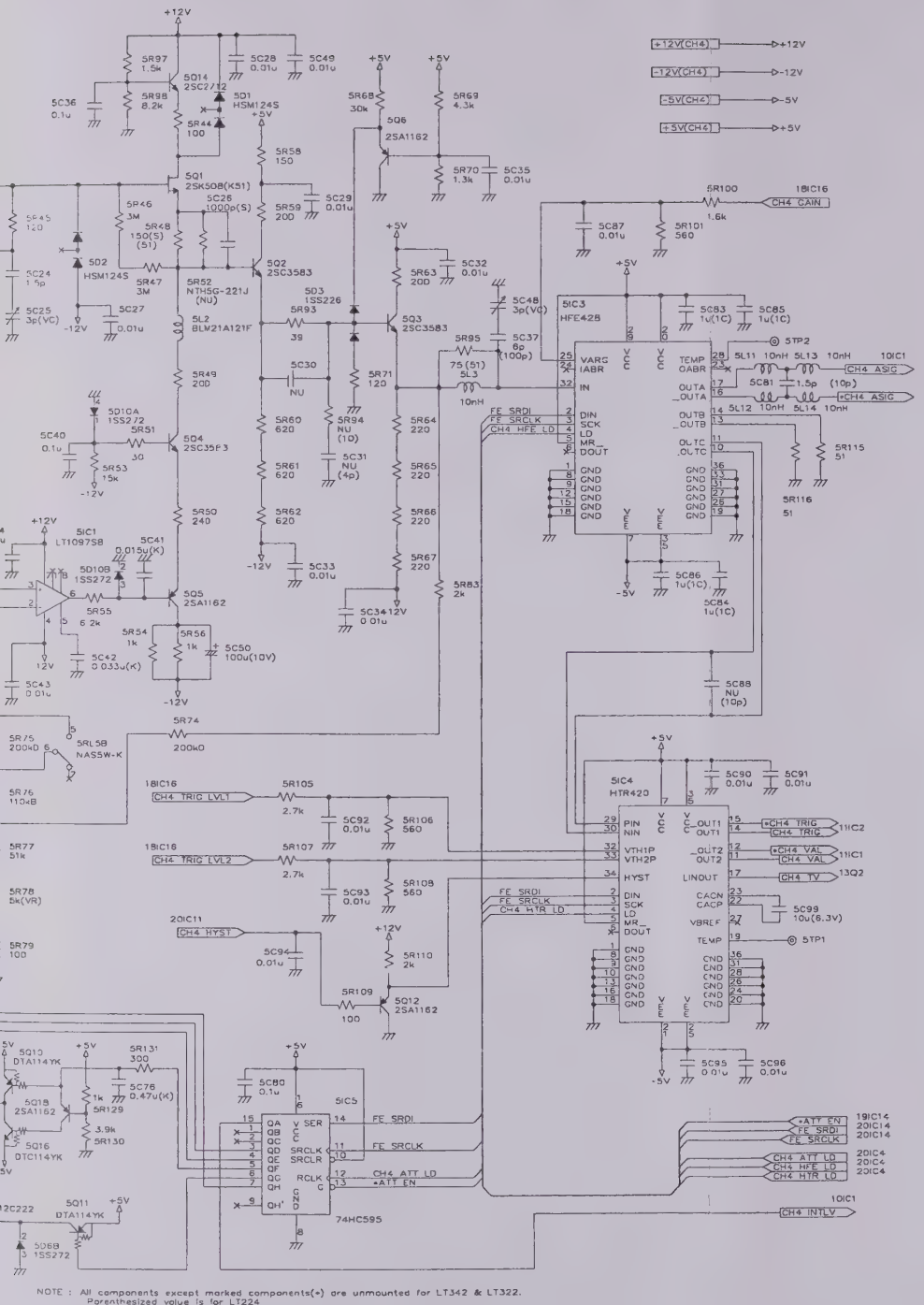

NOTE : All components except marked components(*) are unmounted for LT342 & LT322.
Parenthesized value is for LT224

ONT END (5)

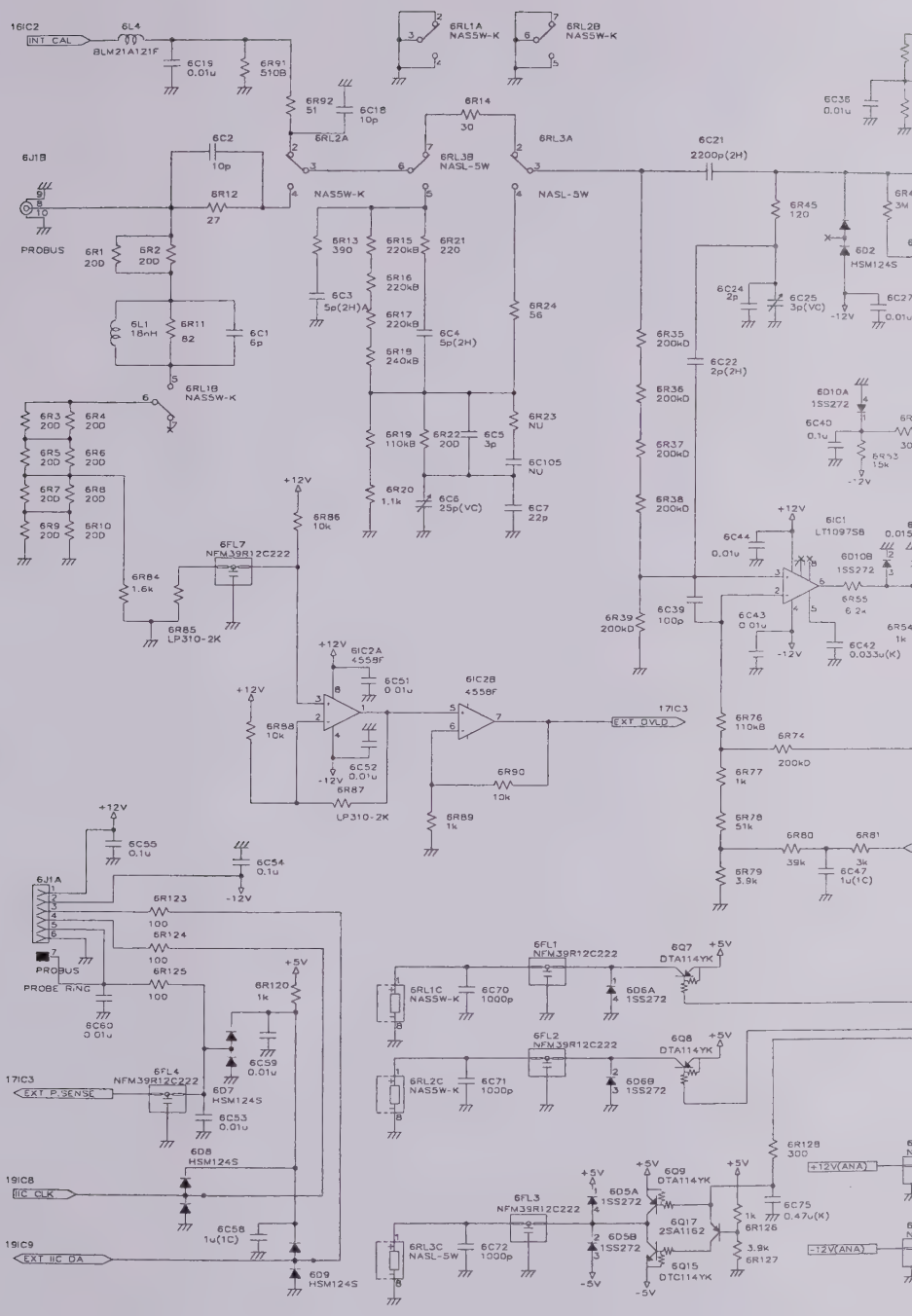
16IC2
INT CAL
6L4
BLM21A121F
6C19 0.01u
6R91 510Ω
6RL1A NAS5W-K
6RL2B NAS5W-K
6R92 51
6C18 10p
6R14 30
6RL2A
6RL3B NASL-5W
6RL3A
6C21 2200p(2H)
6C2 10p
6J1B
6R12 27
NAS5W-K
NASL-5W
PROBUS
6R1 20Ω
6R2 20Ω
6L1 18nH
6R11 82
6C1 6p
6R13 390
6R15 220kΩ
6R21 220
6R16 220kΩ
6C3 5p(2H)
6R17 220kΩ
6C4 5p(2H)
6R19 240kΩ
6R24 56
6R45 120
6D2 HSM124S
6C24 2p
6C25 3p(VC)
-12V
6R35 200kΩ
6C22 2p(2H)
6R36 200kΩ
6R37 200kΩ
6R38 200kΩ
6RL1B NAS5W-K
6R3 20Ω
6R4 20Ω
6R5 20Ω
6R6 20Ω
6R7 20Ω
6R8 20Ω
6R9 20Ω
6R10 20Ω
6R19 110kΩ
6R22 20Ω
6C5 3p
6R23 NU
6C105 NU
6R20 1.1k
6C6 25p(VC)
6C7 22p
6D10A 1SS272
6C40 0.1u
6R93 15k
+12V
6R86 10k
6FL7 NFM39R12C222
6R84 1.6k
6R85 LP310-2K
6IC1 LT1097S8
6C44 0.01u
6D10B 1SS272
6R55 6.2k
6C43 0.01u
6C42 0.033u(K)
6R54 1k
6R39 200kΩ
6C39 100p
6IC2A 4558F
6C51 0.01u
6IC2B 4558F
6R88 10k
6C52 0.01u
6R87 LP310-2K
6R90 10k
6R89 1k
17IC3
EXT OVLD
6R76 110kΩ
6R74 200kΩ
6R77 1k
6R78 51k
6R80 39k
6R81 3k
6C47 1u(1C)
6R79 3.9k
6J1A
6C55 0.1u
6C54 0.1u
6R123 100
6R124 100
6R125 100
PROBE RING
6C60 0.01u
6R120 1k
6C59 0.01u
6FL4 NFM39R12C222
17IC3
EXT P.SENSE
6D7 HSM124S
6C53 0.01u
6D8 HSM124S
19IC8
IIC CLK
19IC9
EXT IIC DA
6C58 1u(1C)
6D9 HSM124S
6FL1 NFM39R12C222
6Q7 DTA114YK
6RL1C NAS5W-K
6C70 1000p
6D6A 1SS272
6FL2 NFM39R12C222
6Q8 DTA114YK
6RL2C NAS5W-K
6C71 1000p
6D6B 1SS272
6FL3 NFM39R12C222
6RL3C NASL-5W
6C72 1000p
6D5A 1SS272
6D5B 1SS272
6Q9 DTA114YK
6Q17 2SA1162
6Q15 DTC114YK
6R128 300
+12V(ANA)
-12V(ANA)
6C75 0.47u(K)
6R126 1k
6R127 3.9k

EXT TR

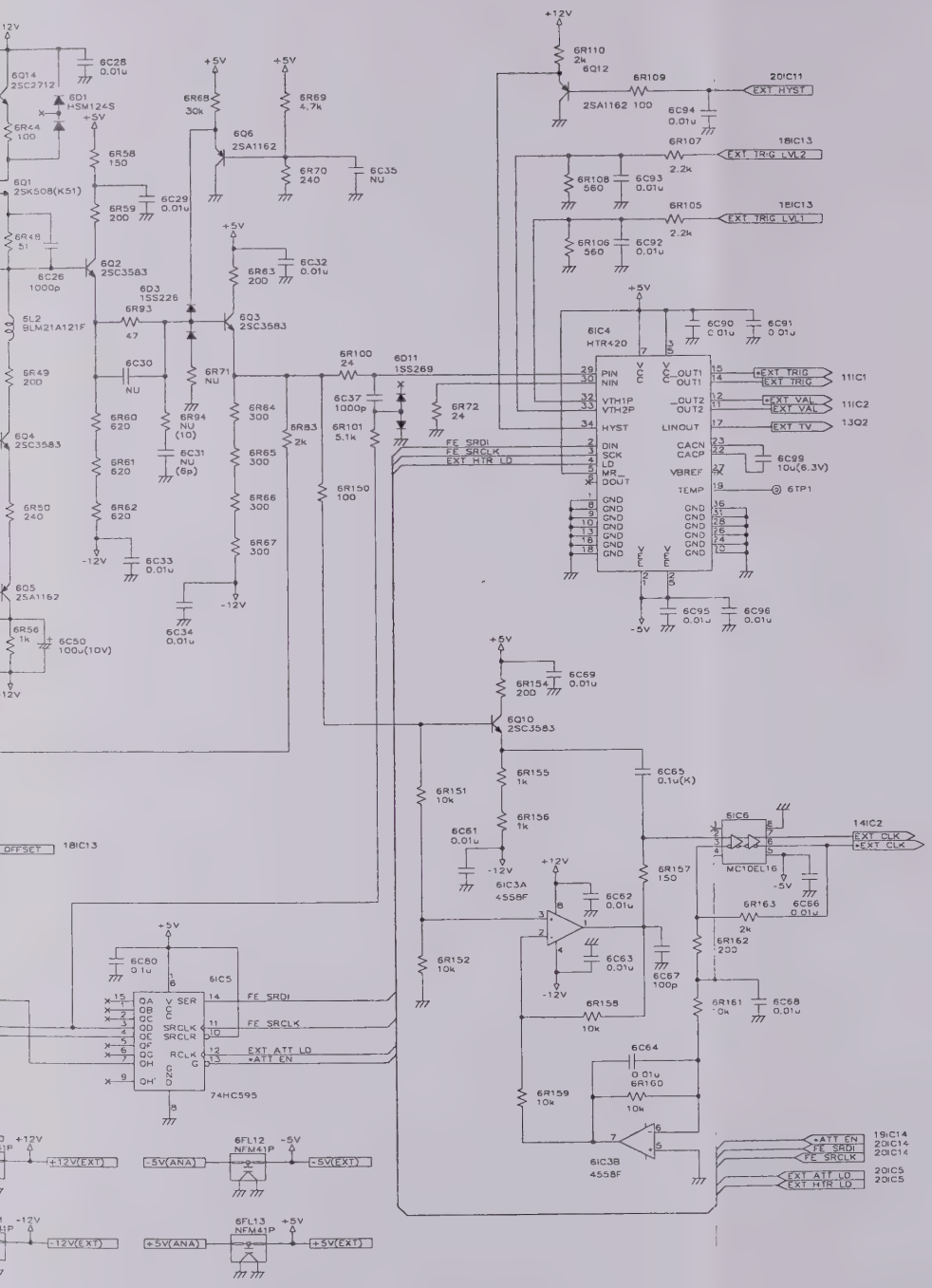

NOTE : Parenthesized value is applied to LT224.

GGER (6)

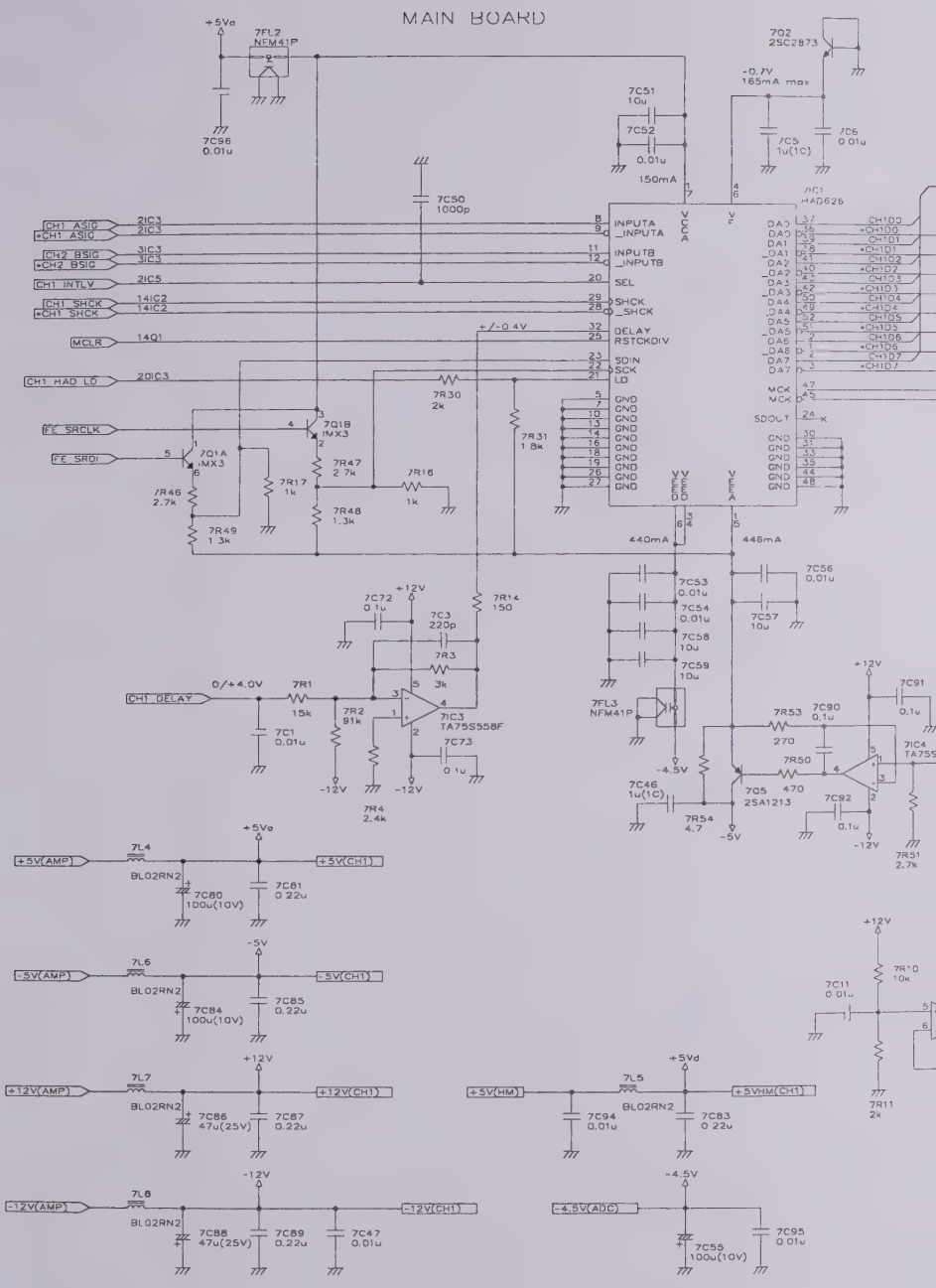
MAIN BOARD
+5Vo
7FL2
NFM41P
7C96
0.01u
7Q2
2SC2873
-0.7V
165mA max
7C51
10u
7C52
0.01u
7C5
1u(1C)
7C6
0.01u
150mA
7C50
1000p
7IC1
MAD626
CH1_ASIC
+CH1_ASIC
CH2_BSIC
+CH2_BSIC
CH1_INTLV
CH1_SHCK
+CH1_SHCK
MCLR
CH1_HAD_LD
FE_SRCLK
FE_SRDI
INPUTA
_INPUTA
INPUTB
_INPUTB
SEL
SHCK
_SHCK
DELAY
RSTCKDIV
SDIN
SCK
LD
MCK
SDOUT
+/-0.4V
7R30
2k
7R31
1.8k
7Q1B
IMX3
7Q1A
IMX3
7R47
2.7k
7R16
1k
7R17
1k
7R46
2.7k
7R48
1.3k
7R49
1.3k
440mA
446mA
+12V
7C72
0.1u
7C3
220p
7R14
150
7R3
3k
0/+4.0V
CH1_DELAY
7R1
15k
7R2
91k
7C1
0.01u
7C73
0.1u
7R4
2.4k
7IC3
TA75S558F
-12V
7C53
0.01u
7C54
0.01u
7C56
0.01u
7C57
10u
7C58
10u
7C59
10u
7FL3
NFM41P
7C91
0.1u
7R53
270
7C90
0.1u
7R50
470
7IC4
TA75S
7Q5
2SA1213
7C46
1u(1C)
7R54
4.7
-4.5V
-5V
7C92
0.1u
7R51
2.7k
+5Vo
7L4
+5V(AMP)
+5V(CH1)
BL02RN2
7C80
100u(10V)
7C81
0.22u
-5V
7L6
-5V(AMP)
-5V(CH1)
7C84
100u(10V)
7C85
0.22u
+12V
7L7
+12V(AMP)
+12V(CH1)
7C86
47u(25V)
7C87
0.22u
-12V
7L8
-12V(AMP)
-12V(CH1)
7C88
47u(25V)
7C89
0.22u
7C47
0.01u
+5Vd
7L5
+5VHM
+5VHM(CH1)
7C94
0.01u
7C83
0.22u
-4.5V(ADC)
7C55
100u(10V)
7C95
0.01u
7R10
10k
7C11
0.01u
7R11
2k

CH1 A

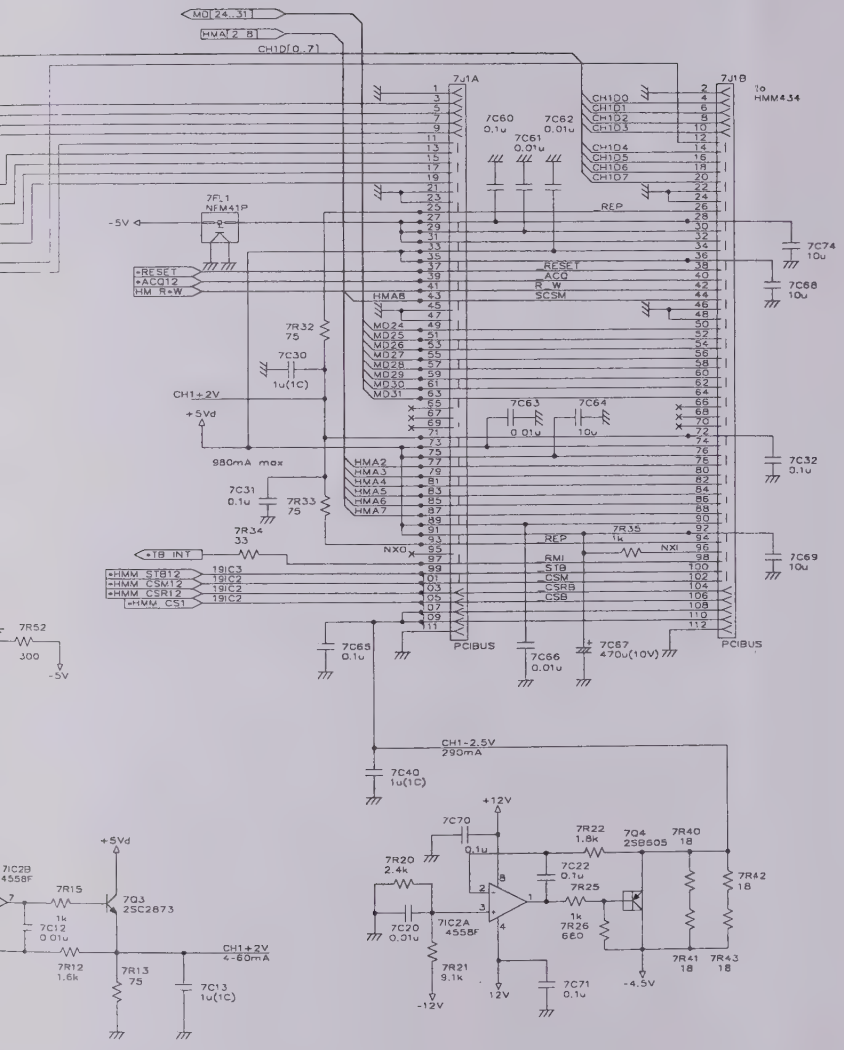
MD[24..31]
HMA[2..8]
CH1D[0..7]
7J1A
7J1B
to HMM434
7C60 0.1u
7C62 0.01u
7C61 0.01u
7FL1 NFM41P
-5V
REP
RESET
ACQ
R_W
SCSM
+RESET
+ACQ12
HM_R+W
HMA8
7R32 75
7C30 1u(1C)
CH1+2V
+5Vd
980mA max
7C63 0.01u
7C64 10u
7C74 10u
7C68 10u
7C32 0.1u
7C69 10u
7C31 0.1u
7R33 75
7R34 33
+TB_INT
+HMM_STB12
+HMM_CSM12
+HMM_CSR12
+HMM_CS1
7R35 1k
NXI
NXO
RMI
STB
CSM
CSRB
CSB
7R52 300
7C65 0.1u
7C66 0.01u
7C67 470u(10V)
PCIBUS
CH1-2.5V 290mA
7C40 1u(1C)
+12V
7C70 0.1u
7R22 1.8k
7Q4 2SB505
7R40 18
7R20 2.4k
7C22 0.1u
7R25 1k
7R26 680
7R42 18
7C20 0.01u
7IC2A 4558F
7R21 9.1k
-12V
12V
7C71 0.1u
-4.5V
7R41 18
7R43 18
7IC2B 4558F
7R15 1k
7Q3 2SC2873
7C12 0.01u
7R12 1.6k
7R13 75
7C13 1u(1C)
CH1+2V 4-60mA

CNVT (7)

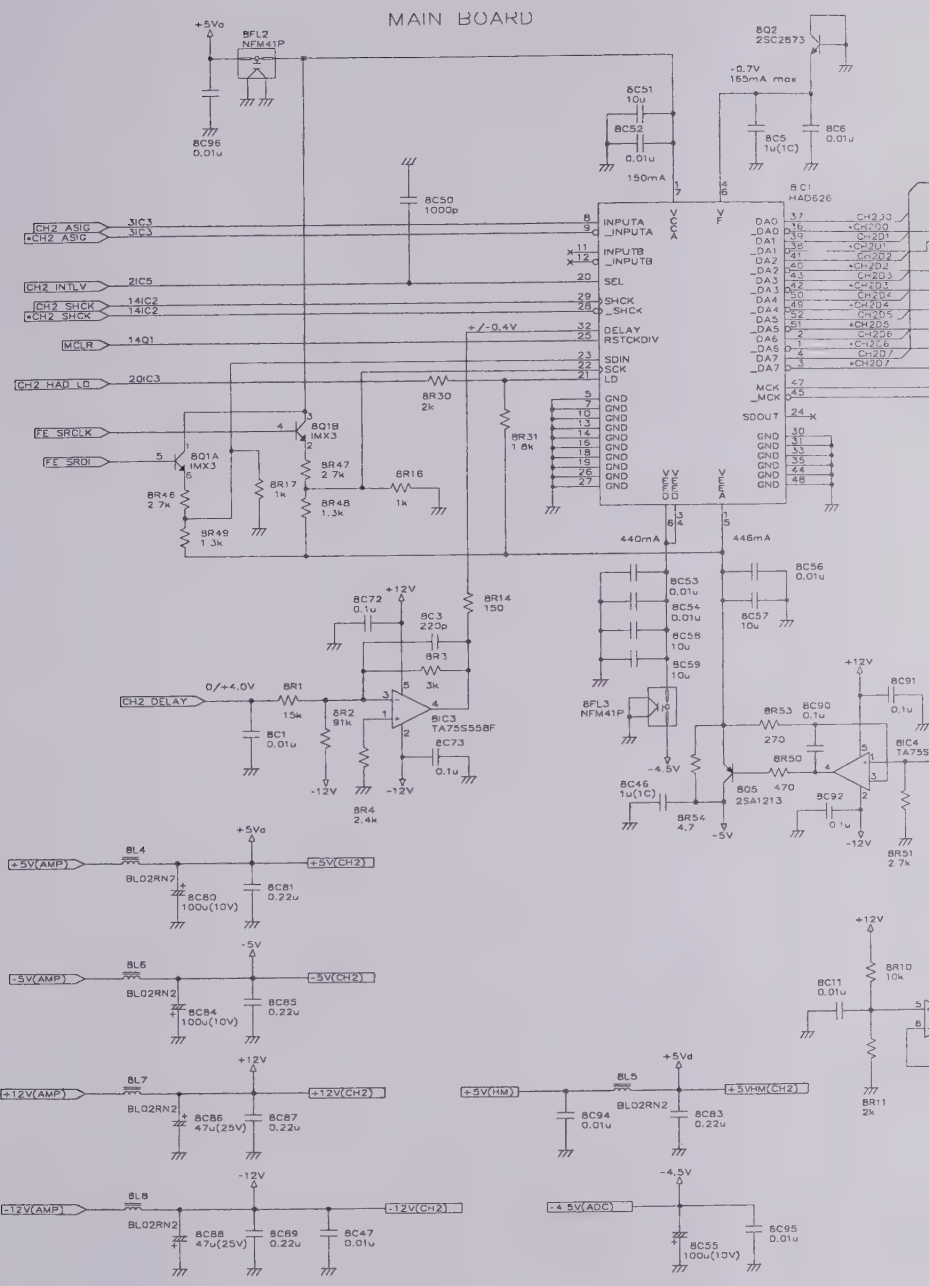
MAIN BOARD
+5Va
8FL2
NFM41P
8C96
0.01u
8Q2
2SC2873
-0.7V
165mA max
8C51
10u
8C52
0.01u
150mA
8C5
1u(1C)
8C6
0.01u
8C50
1000p
8C1
HAD626
3IC3
3IC3
CH2 ASIG
*CH2 ASIG
INPUTA
_INPUTA
INPUTB
_INPUTB
2IC5
CH2 INTLV
SEL
14IC2
14IC2
CH2 SHCK
*CH2 SHCK
SHCK
_SHCK
14Q1
MCLR
+/-0.4V
DELAY
RSTCKDIV
SDIN
SCK
LD
20IC3
CH2 HAD LD
8R30
2k
8R31
1.8k
8Q1B
IMX3
FE SRCLK
8Q1A
IMX3
FE SRDI
8R47
2.7k
8R16
1k
8R17
1k
8R46
2.7k
8R48
1.3k
8R49
1.3k
GND
VCCA
VEA
VCCD
VEE
SDOUT
MCK
_MCK
DA0
_DA0
DA1
_DA1
DA2
_DA2
DA3
_DA3
DA4
_DA4
DA5
_DA5
DA6
_DA6
DA7
_DA7
CH2D0
*CH2D0
CH2D1
*CH2D1
CH2D2
*CH2D2
CH2D3
*CH2D3
CH2D4
*CH2D4
CH2D5
*CH2D5
CH2D6
*CH2D6
CH2D7
*CH2D7
440mA
445mA
8C56
0.01u
8C53
0.01u
8C54
0.01u
8C57
10u
8C58
10u
8C59
10u
8C72
0.1u
+12V
8C3
220p
8R14
150
8R3
3k
0/+4.0V
8R1
15k
CH2 DELAY
8R2
91k
8C1
0.01u
8IC3
TA75S558F
8C73
0.1u
-12V
8R4
2.4k
8FL3
NFM41P
8R53
270
8C90
0.1u
8C91
0.1u
8IC4
TA75S
8R50
470
-4.5V
8C46
1u(1C)
8Q5
2SA1213
8C92
0.1u
8R54
4.7
-5V
8R51
2.7k
8L4
+5V(AMP)
+5V(CH2)
BL02RN2
8C80
100u(10V)
8C81
0.22u
8L6
-5V(AMP)
-5V(CH2)
BL02RN2
8C84
100u(10V)
8C85
0.22u
8L7
+12V(AMP)
+12V(CH2)
BL02RN2
8C86
47u(25V)
8C87
0.22u
8L8
-12V(AMP)
-12V(CH2)
BL02RN2
8C88
47u(25V)
8C89
0.22u
8C47
0.01u
8L5
+5V(HM)
+5VHM(CH2)
BL02RN2
8C94
0.01u
8C83
0.22u
-4.5V(ADC)
8C55
100u(10V)
8C95
0.01u
8R10
10k
8C11
0.01u
8R11
2k

CH2 A

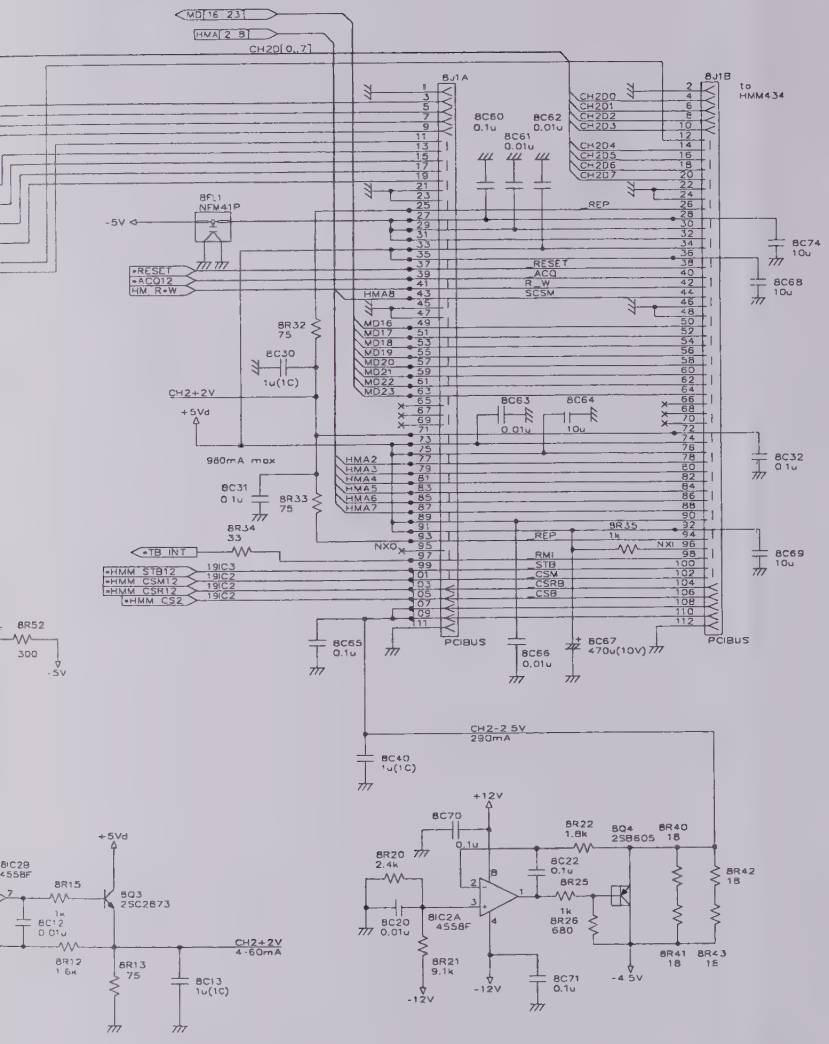
MD[16_23]
HMA[2_8]
CH2D[0..7]
8J1A
8J1B
To HMM434
8C60 0.1u
8C61 0.01u
8C62 0.01u
CH2D0
CH2D1
CH2D2
CH2D3
CH2D4
CH2D5
CH2D6
CH2D7
8F1 NFM41P
-5V
*RESET
*ACQ12
HM_R*W
REP
RESET
ACQ
R_W
SCSM
8C74 10u
8C68 10u
HMA8
MD16
MD17
MD18
MD19
MD20
MD21
MD22
MD23
8R32 75
8C30 1u(1C)
CH2+2V
+5Vd
8C63 0.01u
8C64 10u
980mA max
8C32 0.1u
HMA2
HMA3
HMA4
HMA5
HMA6
HMA7
8C31 0.1u
8R33 75
8R34 33
*TB_INT
NXO
REP
RMI
STB
CSM
CSRB
CSB
8R35 1k
NXI
8C69 10u
*HMM_STB12
*HMM_CSM12
*HMM_CSR12
*HMM_CS2
19IC3
19IC2
19IC2
19IC2
8R52 300
-5V
8C65 0.1u
PCIBUS
8C66 0.01u
8C67 470u(10V)
PCIBUS
CH2-2.5V 290mA
8C40 1u(1C)
+12V
8C70 0.1u
8R22 1.8k
8Q4 2SB605
8R40 18
8R20 2.4k
8C22 0.1u
8R25 1k
8R26 680
8R42 18
8IC2A 4558F
8C20 0.01u
8R21 9.1k
-12V
-12V
8C71 0.1u
-4.5V
8R41 18
8R43 18
+5Vd
8IC2B 4558F
8R15 1k
8Q3 2SC2873
8C12 0.01u
CH2+2V 4.60mA
8R12 1.6k
8R13 75
8C13 1u(1C)

CNVT (8)

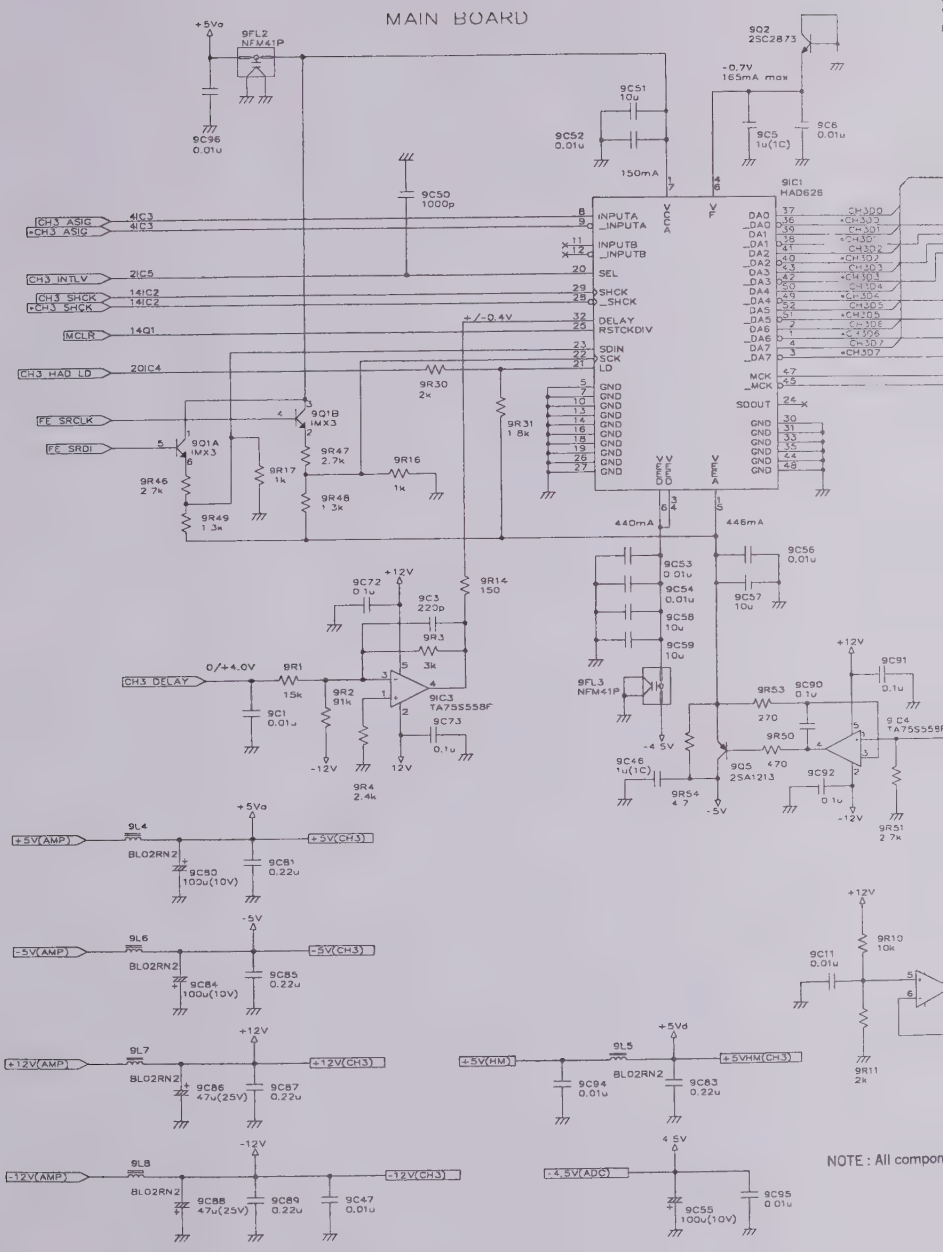
MAIN BOARD
+5Va
9FL2 NFM41P
9C96 0.01u
9Q2 2SC2873
-0.7V 165mA max
9C51 10u
9C52 0.01u
9C5 1u(1C)
9C6 0.01u
150mA
9C50 1000p
9IC1 HAD626
CH3 ASIG
*CH3 ASIG
CH3 INTLV
CH3 SHCK
*CH3 SHCK
MCLR
CH3 HAD LD
FE SRCLK
FE SRDI
9Q1B IMX3
9Q1A IMX3
9R46 2.7k
9R47 2.7k
9R17 1k
9R48 1.3k
9R49 1.3k
9R16 1k
9R30 2k
9R31 1.8k
+/-0.4V
440mA
445mA
9C72 0.1u
9C3 220p
9R14 150
9R3 3k
0/+4.0V
CH3 DELAY
9R1 15k
9R2 91k
9C1 0.01u
9IC3 TA75S558F
9C73 0.1u
9R4 2.4k
9C53 0.01u
9C54 0.01u
9C58 10u
9C59 10u
9C56 0.01u
9C57 10u
9FL3 NFM41P
9R53 270
9C90 0.1u
9C91 0.1u
9R50 470
9C46 1u(1C)
9Q5 2SA1213
9C92 0.1u
9R54 4.7
9R51 2.7k
9L4 BL02RN2
+5V(AMP)
+5V(CH3)
9C80 100u(10V)
9C81 0.22u
9L6 BL02RN2
-5V(AMP)
-5V(CH3)
9C84 100u(10V)
9C85 0.22u
9L7 BL02RN2
+12V(AMP)
+12V(CH3)
9C86 47u(25V)
9C87 0.22u
9L8 BL02RN2
-12V(AMP)
-12V(CH3)
9C88 47u(25V)
9C89 0.22u
9C47 0.01u
9L5 BL02RN2
+5VHM
+5VHM(CH3)
9C94 0.01u
9C63 0.22u
-4.5V(ADC)
9C55 100u(10V)
9C95 0.01u
9R10 10k
9C11 0.01u
9R11 2k
NOTE : All compon
CH3 A

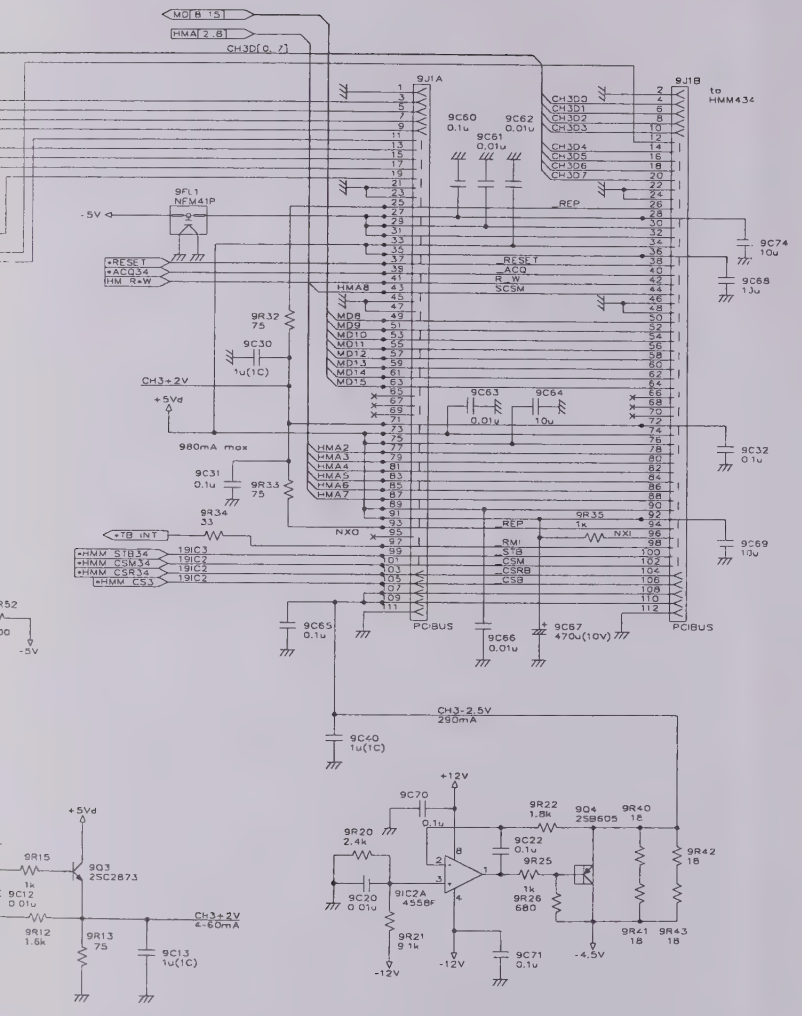

above are not mounted in LT342 & LT322.

CNVT (9)

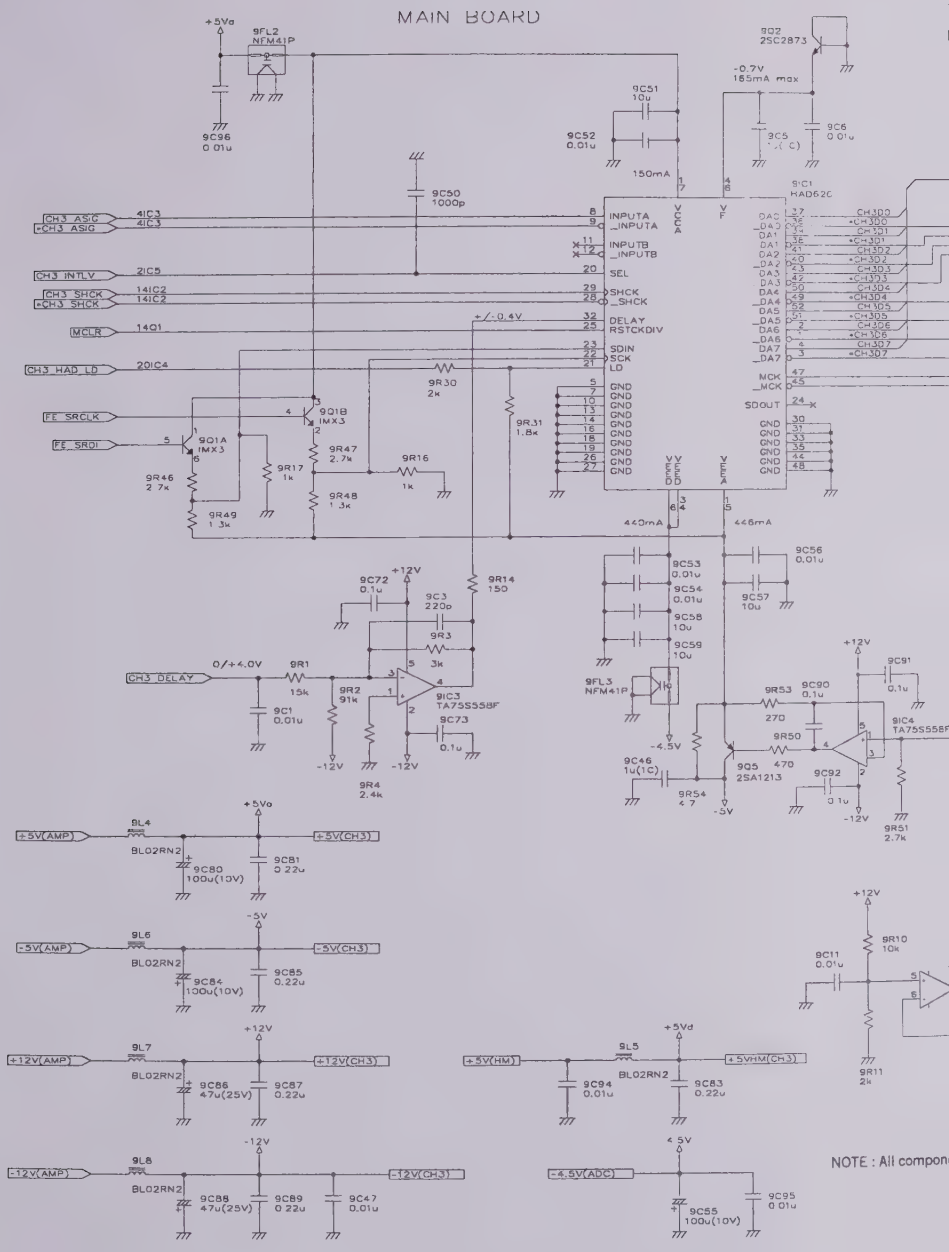
MAIN BOARD
+5Va
9FL2 NFM41P
9C96 0.01u
9C50 1000p
9C51 10u
9C52 0.01u
9Q2 2SC2873
-0.7V 185mA max
9C5 (N.C)
9C6 0.01u
150mA
9IC1 HAD620
CH3_ASIC
+CH3_ASIG
4IC3
CH3_INTLV
2IC5
CH3_SHCK
+CH3_SHCK
14IC2
MCLR
14Q1
CH3_HAD_LD
20IC4
INPUTA
_INPUTA
INPUTB
_INPUTB
SEL
SHCK
_SHCK
DELAY
RSTCKDIV
SDIN
SCK
LD
GND
SDOUT
NCK
_NCK
+/-0.4V
9R30 2k
9R31 1.8k
FE_SRCLK
FE_SRDI
9Q1B IMX3
9Q1A IMX3
9R46 2.7k
9R47 2.7k
9R48 1.3k
9R49 1.3k
9R17 1k
9R16 1k
440mA
446mA
9C53 0.01u
9C54 0.01u
9C58 10u
9C59 10u
9C56 0.01u
9C57 10u
9FL3 NFM41P
9C72 0.1u
9C3 220p
9R3 3k
9R14 150
+12V
0/+4.0V
CH3_DELAY
9R1 15k
9R2 91k
9R4 2.4k
9C1 0.01u
9C73 0.1u
9IC3 TA75S558F
-12V
9C91 0.1u
9C90 0.1u
9R53 270
9R50 470
9Q5 2SA1213
9C46 1u(1C)
9R54 4.7
-4.5V
-5V
9IC4 TA75S558F
9R51 2.7k
9C92 0.1u
9L4
+5V(AMP)
+5V(CH3)
BL02RN2
9C80 100u(10V)
9C81 0.22u
9L6
-5V(AMP)
-5V(CH3)
9C84 100u(10V)
9C85 0.22u
9L7
+12V(AMP)
+12V(CH3)
9C86 47u(25V)
9C87 0.22u
9L8
-12V(AMP)
-12V(CH3)
9C88 47u(25V)
9C89 0.22u
9C47 0.01u
9L5
+5V(HM)
+5VHM(CH3)
9C94 0.01u
9C83 0.22u
9C11 0.01u
9R10 10k
9R11 2k
-4.5V(ADC)
9C55 100u(10V)
9C95 0.01u
NOTE : All compon

CH4 A/D

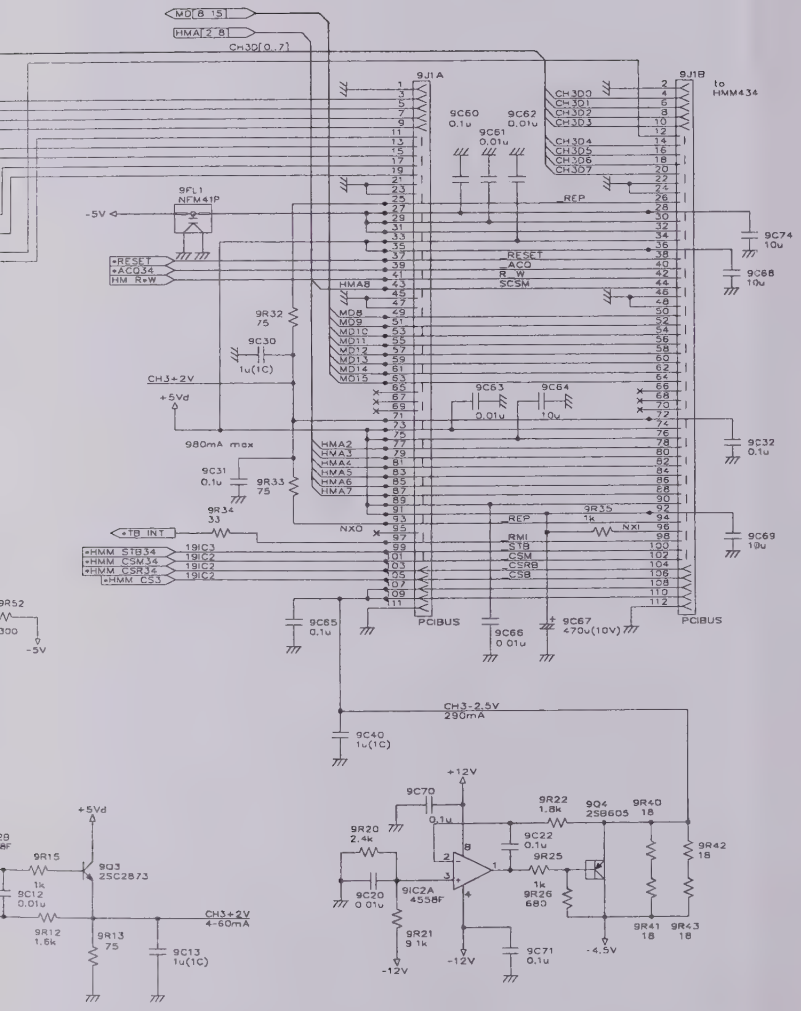

s above are not mounted in LT342 & LT322.

CNVT (10)

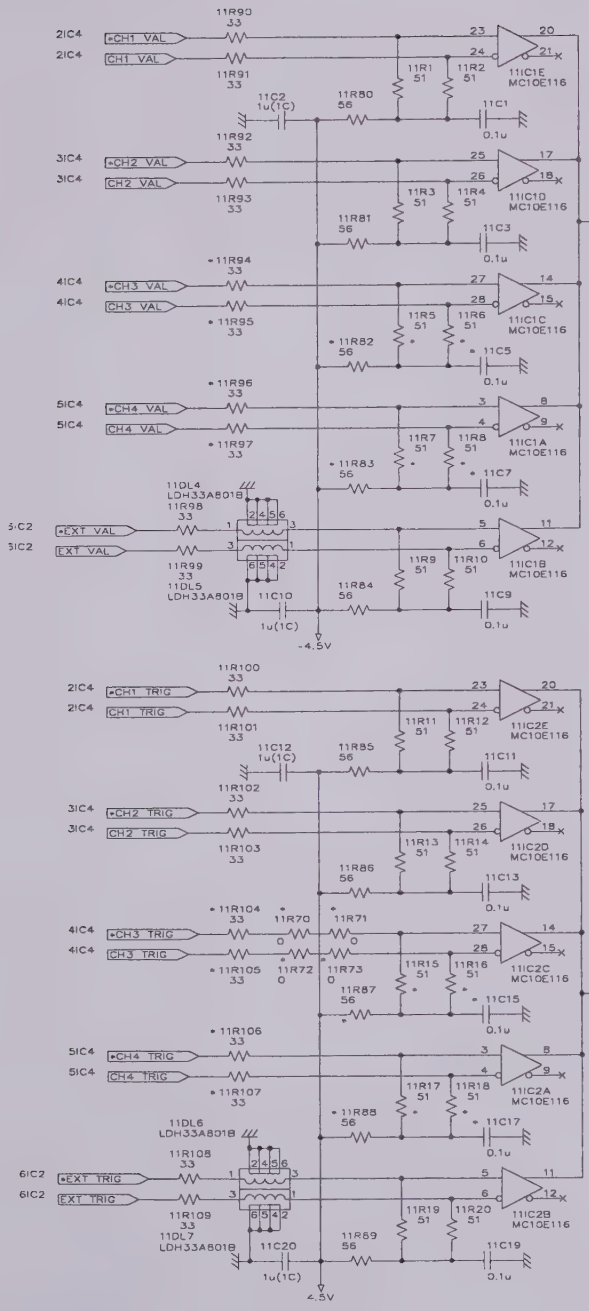

NOTE : Marked components (*) are

BORAD

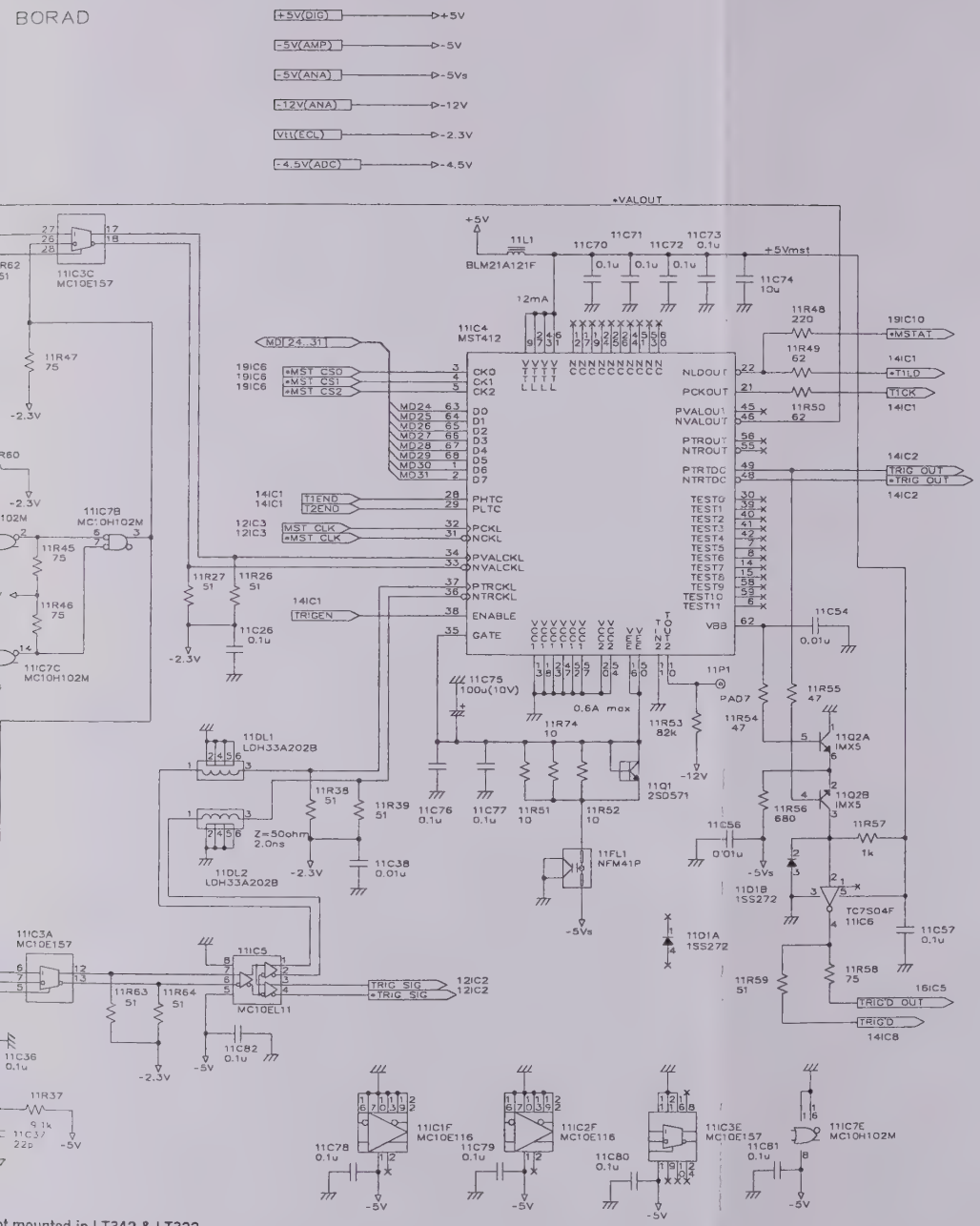

ot mounted in LT342 & LT322.

ECTOR (11)

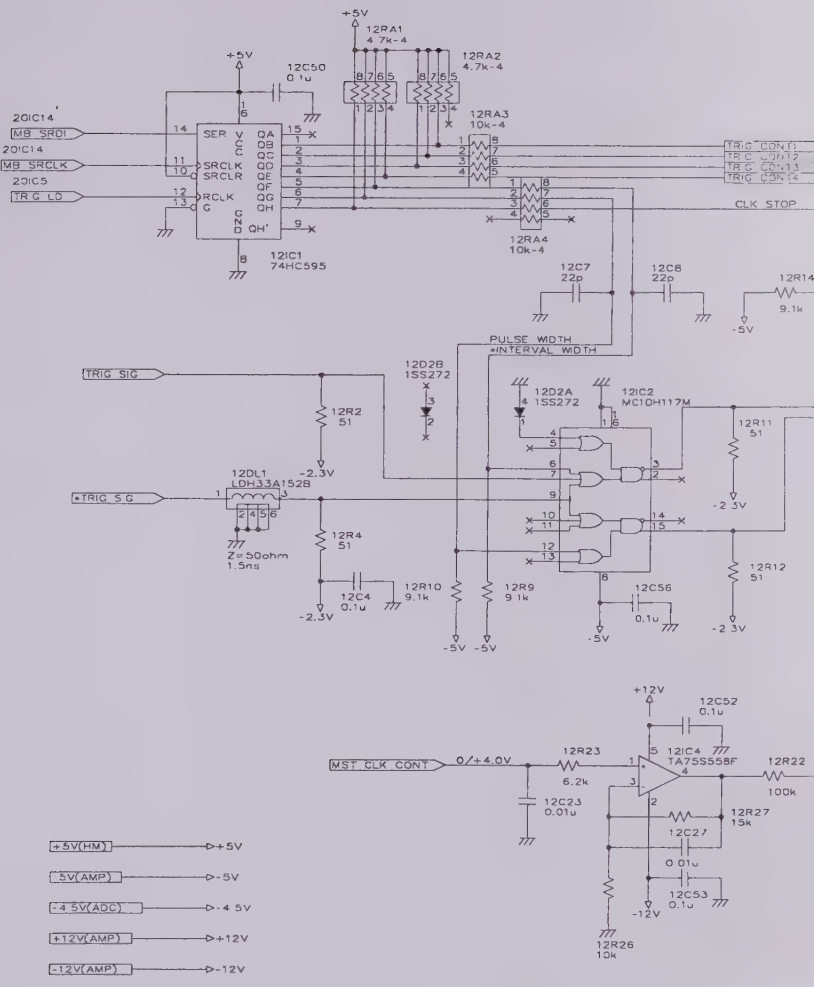
+5V
12RA1
4.7k-4
12RA2
4.7k-4
12C50
0.1u
20IC14'
MB SRDI
20IC14
MB SRCLK
20IC5
TRG LD
SER
SRCLK
SRCLR
RCLK
G
QA
QB
QC
QD
QE
QF
QG
QH
QH'
12IC1
74HC595
12RA3
10k-4
12RA4
10k-4
CLK STOP
12C7
22p
12C8
22p
12R14
9.1k
-5V
PULSE WIDTH
*INTERVAL WIDTH
TRIG SIG
12D2B
1SS272
12D2A
1SS272
12IC2
MC10H117M
12R2
51
12DL1
LDH33A152B
-2.3V
*TRIG S.G
Z=50ohm
1.5ns
12R4
51
12C4
0.1u
12R10
9.1k
12R9
9.1k
12C56
0.1u
12R11
51
12R12
51
-2.3V
-5V
+5V(HM)
+5V
-5V(AMP)
-5V
-4.5V(ADC)
-4.5V
+12V(AMP)
+12V
-12V(AMP)
-12V
+12V
12C52
0.1u
MST CLK CONT
0/+4.0V
12R23
6.2k
12C23
0.01u
12IC4
TA75S558F
12R22
100k
12R27
15k
12C27
0.01u
12C53
0.1u
12R26
10k

400MH

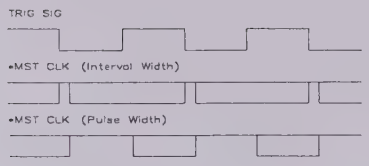
TRIG SIG
•MST CLK (Interval Width)
•MST CLK (Pulse Width)

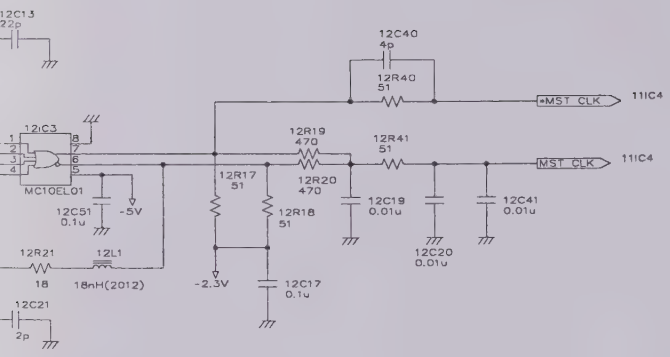
12C13
22p
12C40
4p
12R40
51
•MST CLK
11IC4
12IC3
12R19
470
12R41
51
MST CLK
11IC4
12R17
51
12R20
470
12C19
0.01u
12C41
0.01u
MC10EL01
12C51
0.1u
-5V
12R18
51
12C20
0.01u
12R21
18
12L1
18nH(2012)
-2.3V
12C17
0.1u
12C21
2p

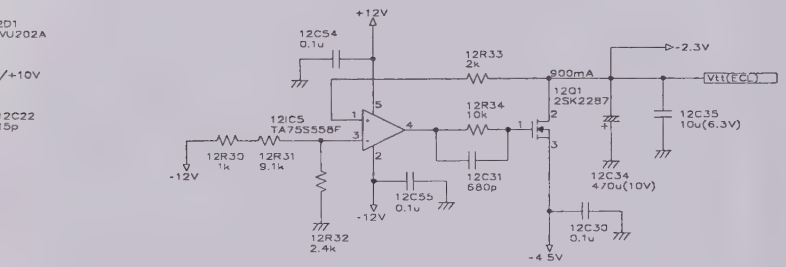
+12V
12C54
0.1u
12R33
2k
900mA
-2.3V
Vtt(EC)
12Q1
2SK2287
12IC5
TA75S558F
12R34
10k
12C35
10u(6.3V)
12R30
1k
12R31
9.1k
-12V
12C31
680p
12C34
470u(10V)
12C55
0.1u
-12V
12R32
2.4k
12C30
0.1u
-4.5V

OSC (12)

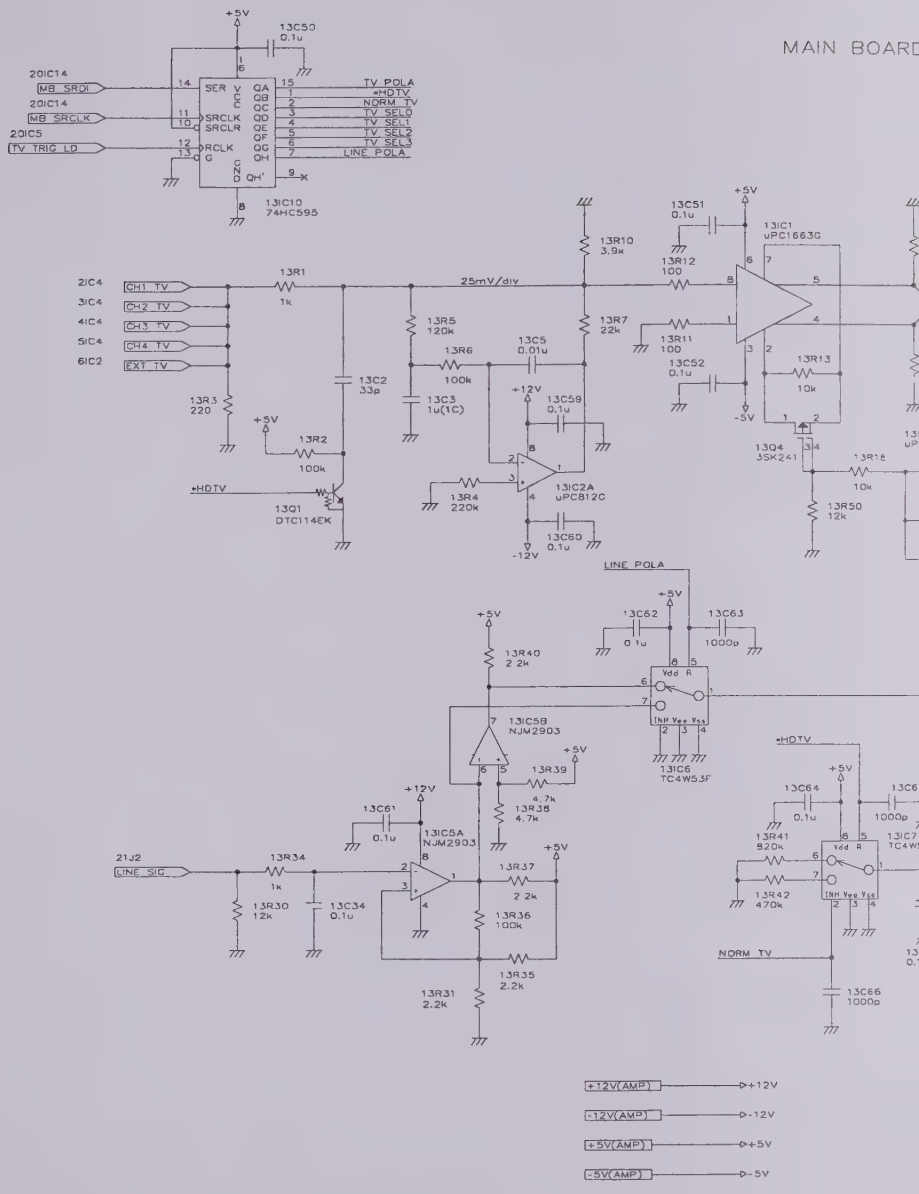
+5V
13C50 0.1u
20IC14
MB_SRDI
20IC14
MB_SRCLK
20IC5
TV_TRIG_LD
SER
SRCLK
SRCLR
RCLK
G
QA
QB
QC
QD
QE
QF
QG
QH
QH'
TV_POLA
+HDTV
NORM_TV
TV_SEL0
TV_SEL1
TV_SEL2
TV_SEL3
LINE_POLA
13IC10 74HC595
13C51 0.1u
13IC1 uPC1663G
13R10 3.9k
13R12 100
13R11 100
13C52 0.1u
13R13 10k
13R18 10k
13R50 12k
13Q4 3SK241
-5V
2IC4 CH1_TV
3IC4 CH2_TV
4IC4 CH3_TV
5IC4 CH4_TV
6IC2 EXT_TV
13R1 1k
25mV/div
13R5 120k
13R6 100k
13C5 0.01u
13R7 22k
13C2 33p
13C3 1u(1C)
13R3 220
13R2 100k
+12V
13C59 0.1u
13IC2A uPC812C
13R4 220k
13C60 0.1u
-12V
13Q1 DTC114EK
LINE_POLA
13C62 0.1u
13C63 1000p
13R40 2.2k
13IC5B NJM2903
13R39 4.7k
13R38 4.7k
13C61 0.1u
13IC5A NJM2903
21J2 LINE_SIG
13R34 1k
13R30 12k
13C34 0.1u
13R37 2.2k
13R36 100k
13R35 2.2k
13R31 2.2k
13IC6 TC4W53F
+HDTV
13C64 0.1u
13R41 820k
13R42 470k
NORM_TV
13C66 1000p
+12V(AMP)
-12V(AMP)
+5V(AMP)
-5V(AMP)

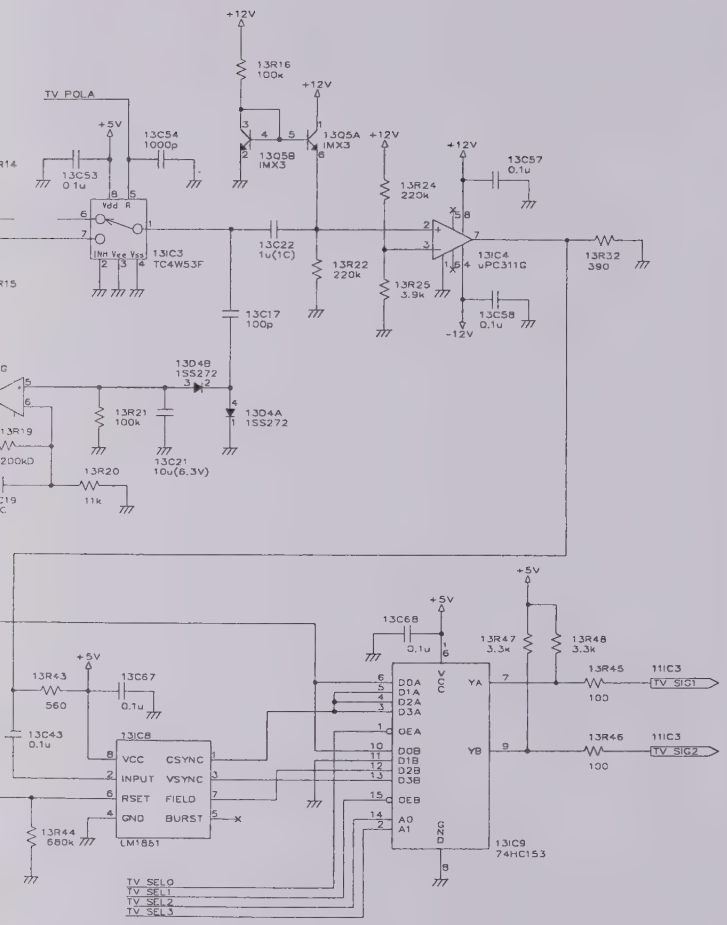
PAL/SECAM : 625Line/50Hz/2:1
NTSC : 525Line/60Hz/2:1
+12V
13R16
100k
TV POLA
+5V
13C54
1000p
13C53
0.1u
13Q5A
IMX3
13Q5B
IMX3
13R24
220k
13C57
0.1u
13C22
1u(1C)
13R22
220k
13IC3
TC4W53F
13IC4
uPC311C
13R32
390
13R25
3.9k
13C58
0.1u
-12V
13C17
100p
13D4B
1SS272
13D4A
1SS272
13R21
100k
13C21
10u(6.3V)
13R20
11k
13R19
200kΩ
13C68
0.1u
13R47
3.3k
13R48
3.3k
13R45
100
11IC3
TV SIG1
13R46
100
TV SIG2
13R43
560
13C67
0.1u
13C43
0.1u
13IC8
VCC
INPUT
RSET
GND
CSYNC
VSYNC
FIELD
BURST
LM1851
13R44
680k
13IC9
74HC153
TV SEL0
TV SEL1
TV SEL2
TV SEL3

SEP (13)

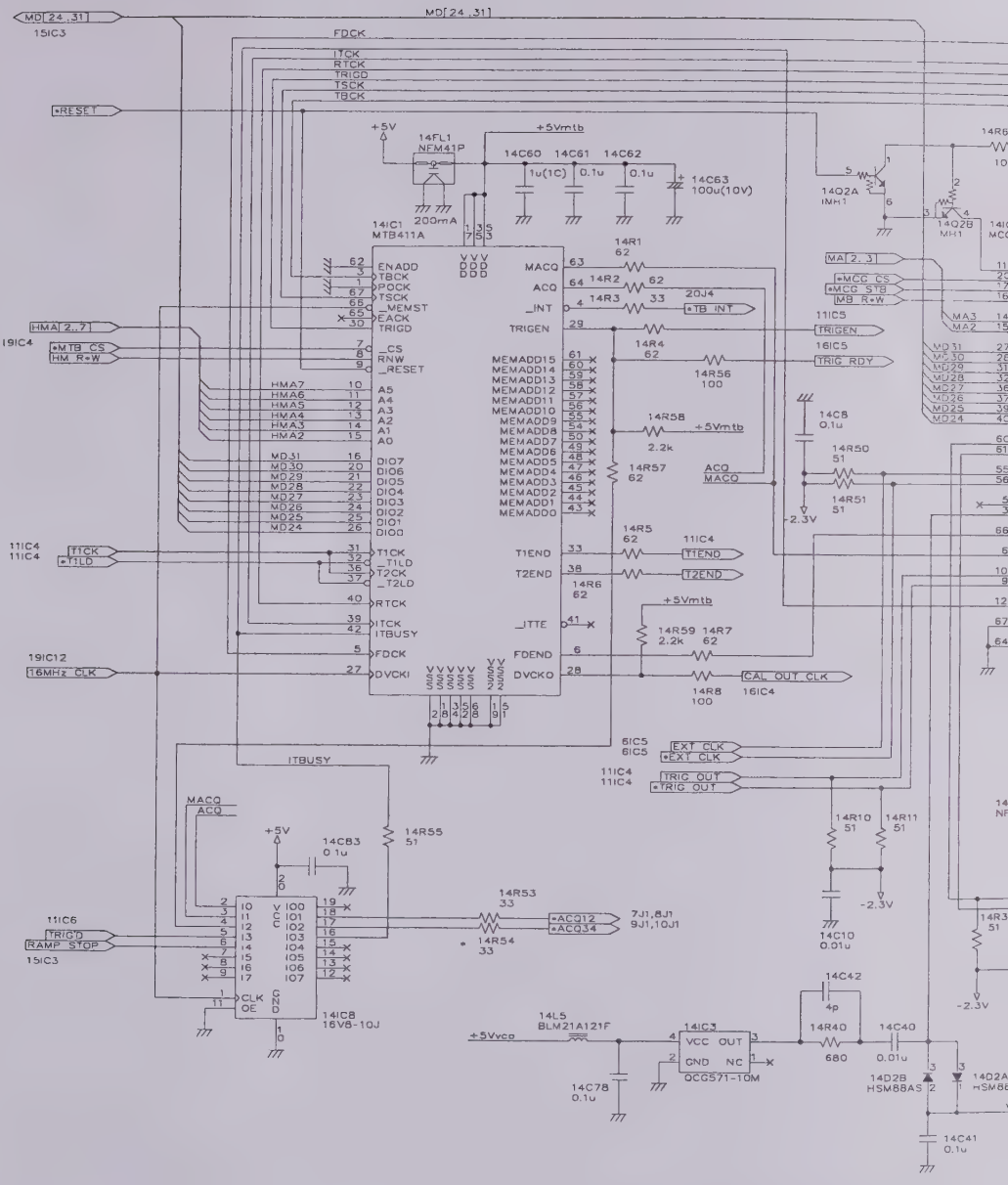

NOTE : Parenthesized value is applied to LT342 & LT322.
Marked components (*) are not mounted in LT342 & LT322.

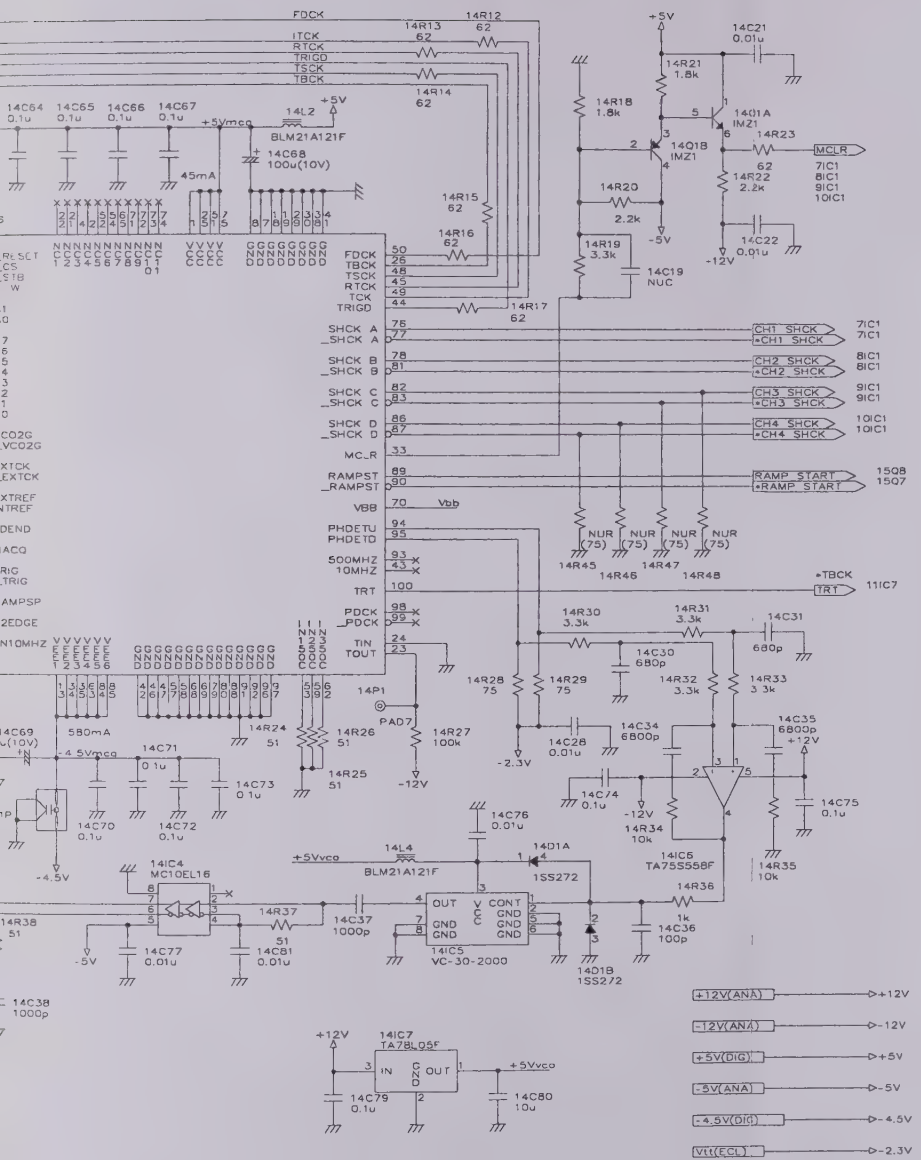
FDCK
ITCK
RTCK
TRIGD
TSCK
TBCK
14R13 62
14R12 62
14R14 62
14C64 0.1u
14C65 0.1u
14C66 0.1u
14C67 0.1u
+5Vmco
14L2
BLM21A121F
14C68 100u(10V)
45mA
14R15 62
14R16 62
14R17 62
FDCK
TBCK
TSCK
RTCK
TCK
TRIGD
SHCK A
_SHCK A
SHCK B
_SHCK B
SHCK C
_SHCK C
SHCK D
_SHCK D
MCLR
RAMPST
_RAMPST
VBB
PHDETU
PHDETD
500MHZ
10MHZ
TRT
PDCK
_PDCK
TIN
TOUT
+5V
14R21 1.8k
14R18 1.8k
14Q1A IMZ1
14Q1B IMZ1
14R23 62
MCLR
7IC1
8IC1
9IC1
10IC1
14R22 2.2k
14R20 2.2k
-5V
14C21 0.01u
14C22 0.01u
-12V
14R19 3.3k
14C19 NUC
CH1 SHCK
*CH1 SHCK
CH2 SHCK
*CH2 SHCK
CH3 SHCK
*CH3 SHCK
CH4 SHCK
*CH4 SHCK
RAMP START
*RAMP START
15Q8
15Q7
NUR (75)
14R45
14R46
14R47
14R48
*TBCK
TRT
11IC7
14R30 3.3k
14R31 3.3k
14C31 680p
14C30 680p
14R28 75
14R29 75
14R32 3.3k
14R33 3.3k
14P1
PAD7
14R24 51
14R26 51
14R27 100k
14R25 51
-12V
-2.3V
14C28 0.01u
14C34 6800p
14C35 6800p
+12V
14C74 0.1u
14R34 10k
14C75 0.1u
14R35 10k
14C76 0.01u
14L4
BLM21A121F
14D1A
1SS272
14IC6
TA75S558F
14R36 1k
14C36 100p
14IC4
MC10EL16
14R37 51
14C37 1000p
14C81 0.01u
14C77 0.01u
14IC5
VC-30-2000
14D1B
1SS272
14C38 1000p
14IC7
TA78L05F
14C79 0.1u
14C80 10u
+5Vvco
+12V(ANA)
-12V(ANA)
+5V(DIG)
-5V(ANA)
-4.5V(DIG)
Vtt(ECL)

ASE (14)

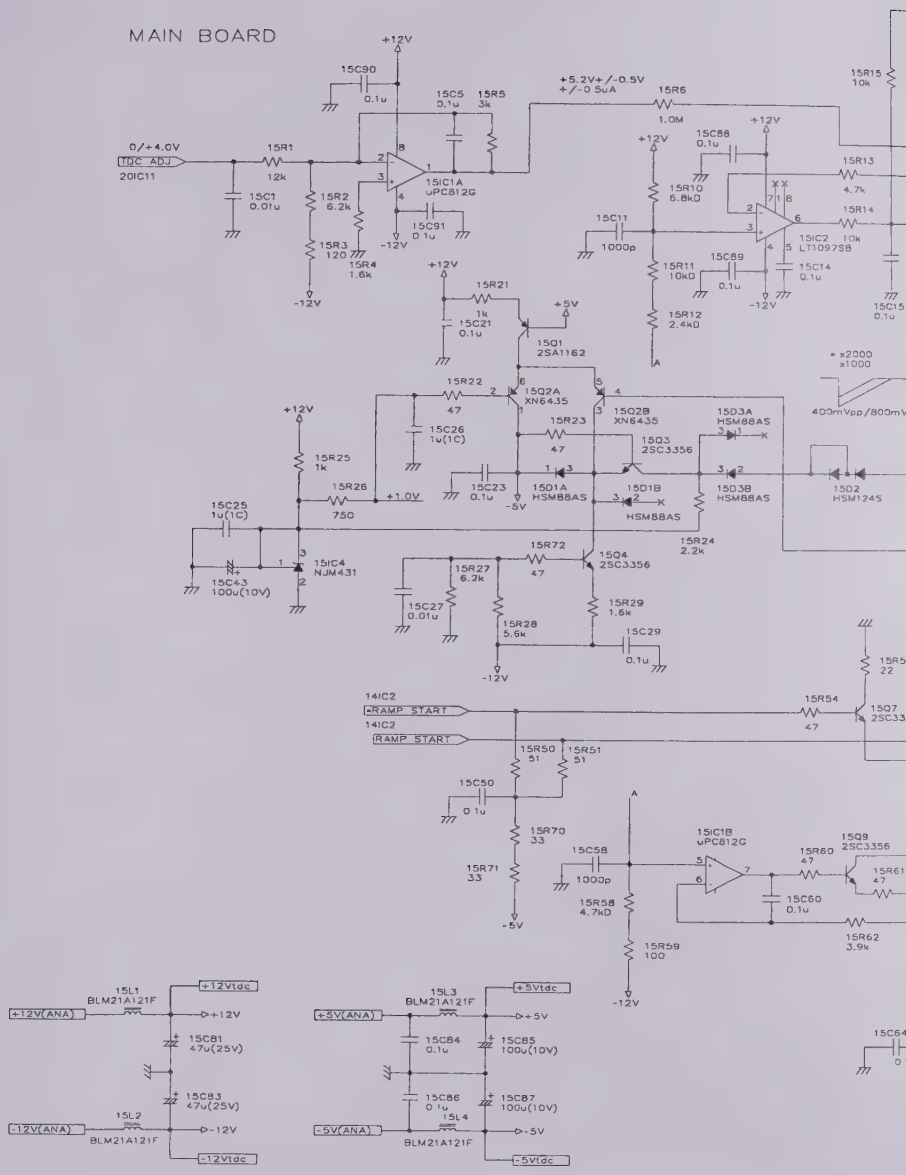
MAIN BOARD
+12V
15C90
0.1u
15C5
0.1u
15R5
3k
+5.2V+/-0.5V
+/-0.5uA
15R6
1.0M
15R15
10k
0/+4.0V
TDC ADJ
20IC11
15R1
12k
15C1
0.01u
15R2
6.2k
15R3
120
15R4
1.6k
-12V
15IC1A
uPC812G
15C91
0.1u
15C88
0.1u
15R13
4.7k
15R10
6.8kD
15C11
1000p
15R11
10kD
15R12
2.4kD
15C89
0.1u
15IC2
LT1097S8
15R14
10k
15C14
0.1u
15C15
0.1u
15R21
1k
15C21
0.1u
+5V
15Q1
2SA1162
15R22
47
15Q2A
XN6435
15Q2B
XN6435
15R23
47
15C26
1u(1C)
15Q3
2SC3356
15D3A
HSM88AS
15D3B
HSM88AS
15D2
HSM124S
400mVpp/800mV
x2000
x1000
15R25
1k
15R26
750
+1.0V
15C23
0.1u
-5V
15D1A
HSM88AS
15D1B
HSM88AS
15R24
2.2k
15C25
1u(1C)
15IC4
NJM431
15C43
100u(10V)
15R72
47
15Q4
2SC3356
15R27
6.2k
15C27
0.01u
15R28
5.6k
15R29
1.6k
15C29
0.1u
14IC2
-RAMP START
14IC2
RAMP START
15R54
47
15Q7
2SC33
15R50
51
15R51
51
15C50
0.1u
15R70
33
15R71
33
15C58
1000p
15R58
4.7kD
15R59
100
15IC1B
uPC812G
15R60
47
15C60
0.1u
15Q9
2SC3356
15R61
47
15R62
3.9k
15L1
BLM21A121F
+12Vtdc
+12V(ANA)
+12V
15C81
47u(25V)
15C83
47u(25V)
15L2
BLM21A121F
-12V(ANA)
-12V
-12Vtdc
15L3
BLM21A121F
+5Vtdc
+5V(ANA)
+5V
15C84
0.1u
15C85
100u(10V)
15C86
0.1u
15C87
100u(10V)
15L4
BLM21A121F
-5V(ANA)
-5V
-5Vtdc
15C64
0

T/D C

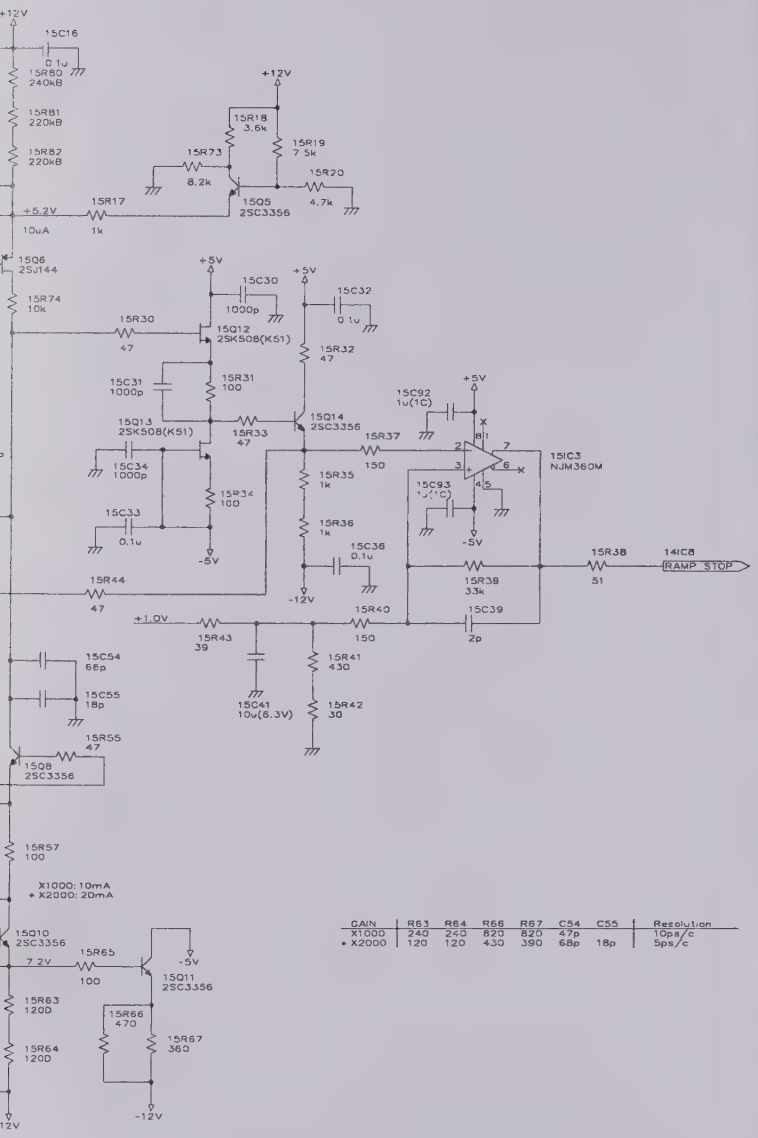

GAIN	R63	R64	R66	R67	C54	C55	Resolution
X1000	240	240	820	820	47p		10ps/c
• X2000	120	120	430	390	68p	18p	5ps/c

NVT (15)

MAIN BOARD

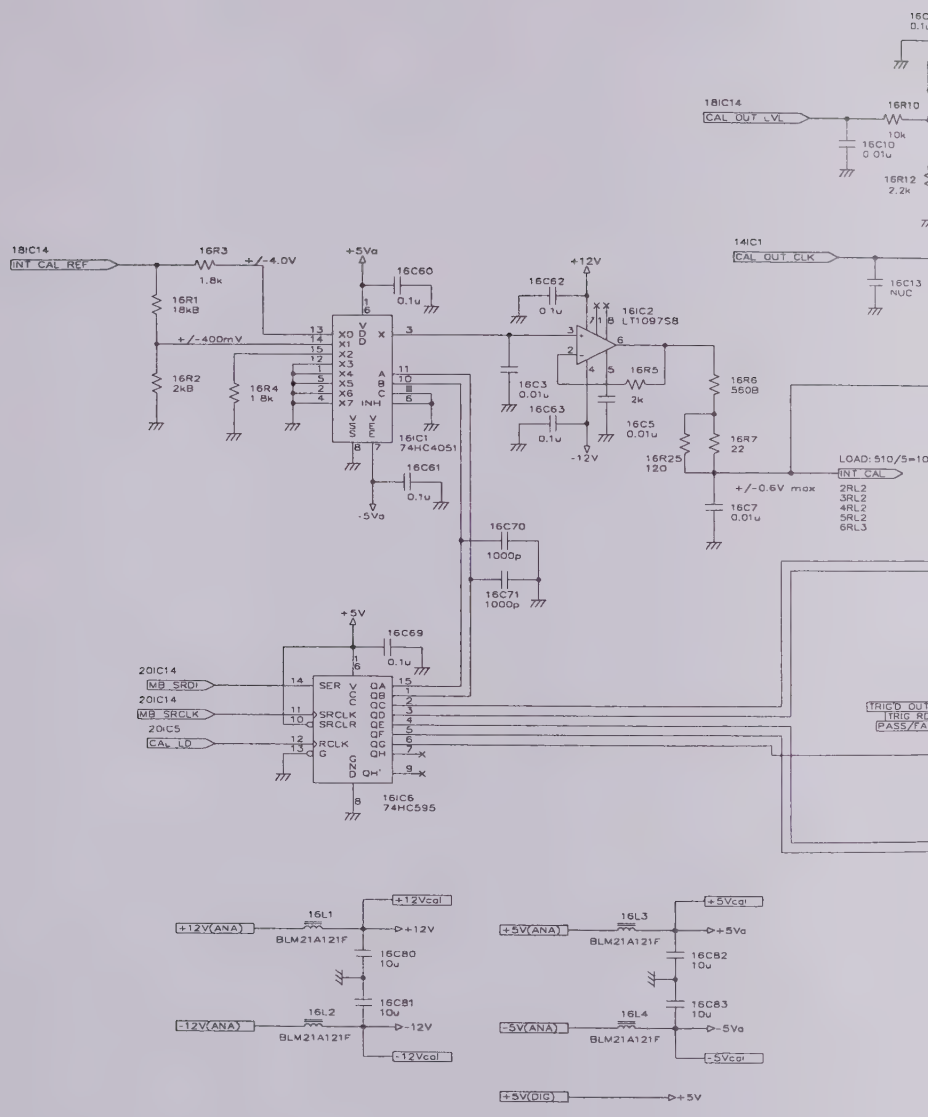

CAL S

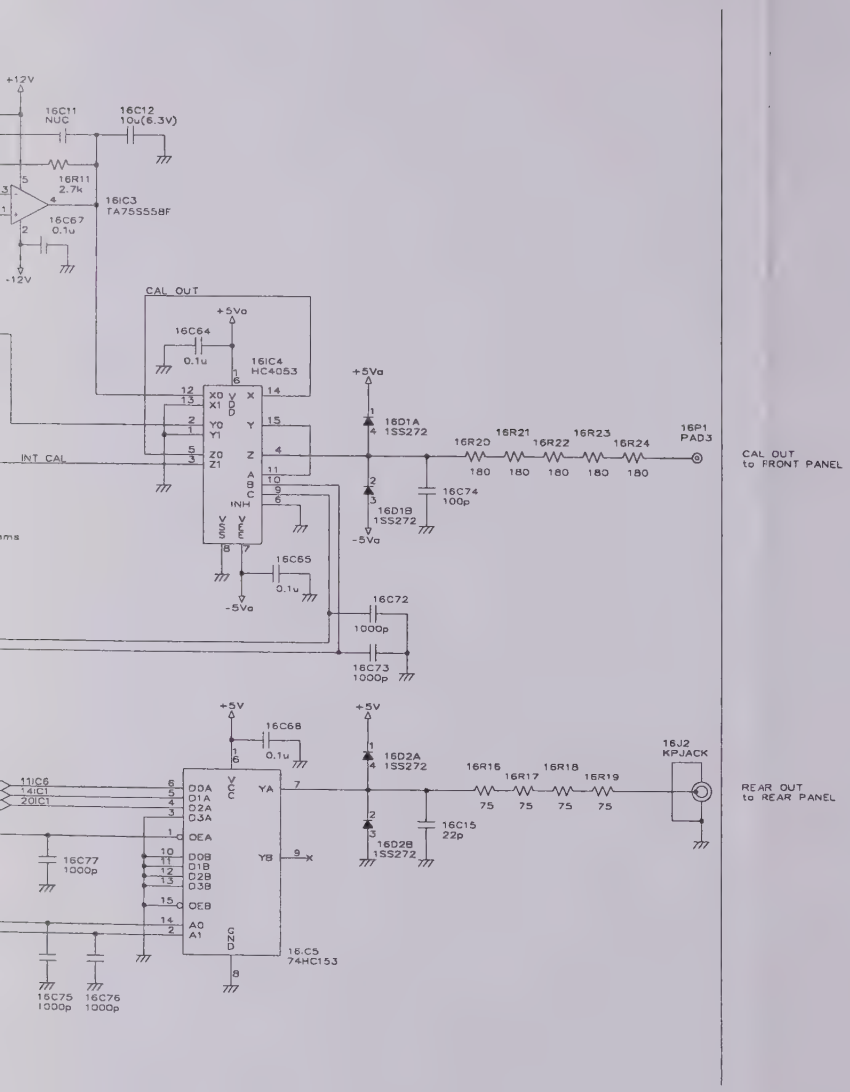
+12V
16C11
NUC
16C12
10u(6.3V)
16R11
2.7k
16IC3
TA75S558F
16C67
0.1u
-12V
CAL OUT
+5Va
16C64
0.1u
16IC4
HC4053
INT CAL
16D1A
1SS272
16R20
16R21
16R22
16R23
16R24
180
180
180
180
180
16P1
PAD3
CAL OUT
to FRONT PANEL
16C74
100p
16D1B
1SS272
-5Va
16C65
0.1u
16C72
1000p
16C73
1000p
+5V
16C68
0.1u
16D2A
1SS272
16R15
16R17
16R18
16R19
75
75
75
75
16J2
KPJACK
REAR OUT
to REAR PANEL
16C15
22p
16D2B
1SS272
11IC6
14IC1
20IC1
16C77
1000p
16C75
1000p
16C76
1000p
16C5
74HC153

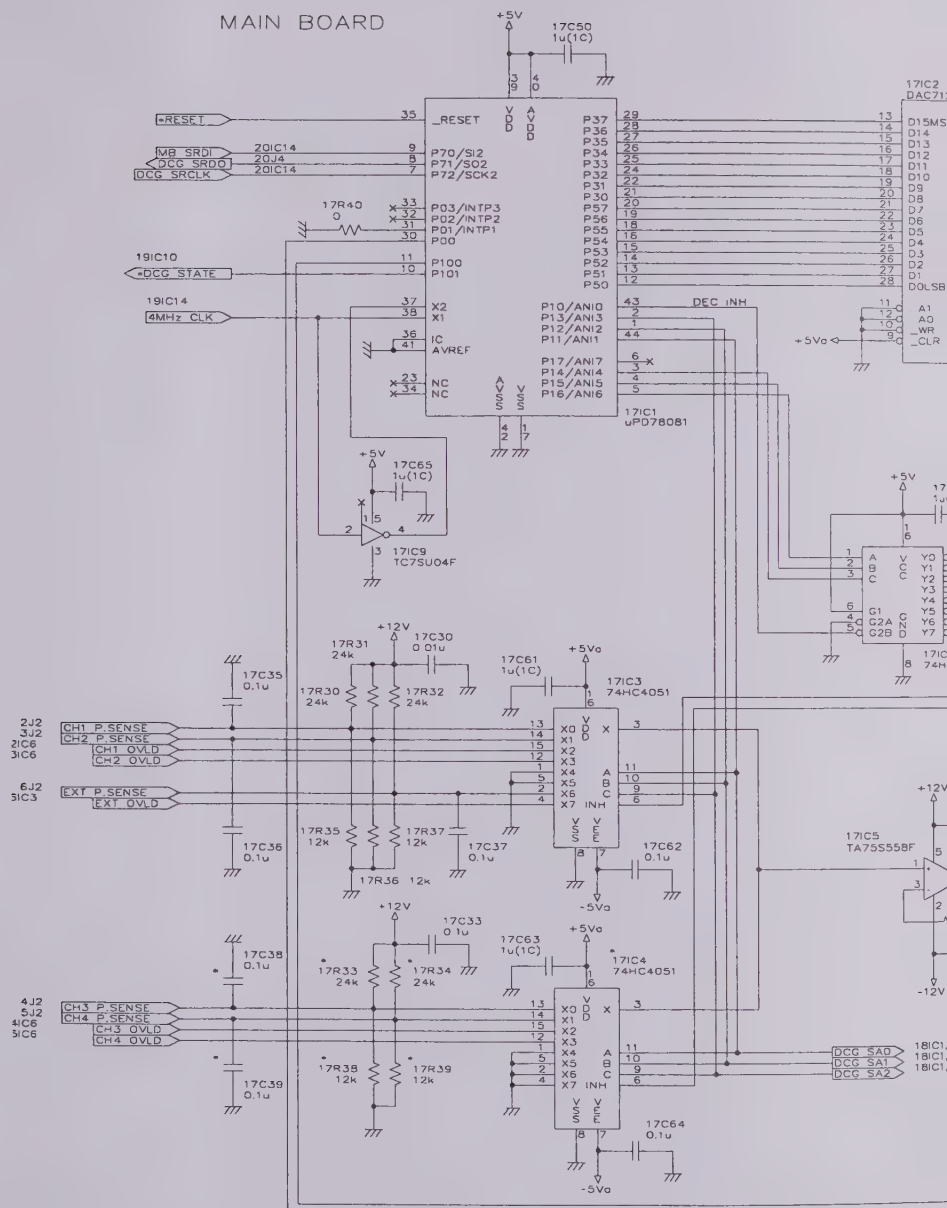

NOTE : Marked components (*) are not mounted in LT342 & LT322.

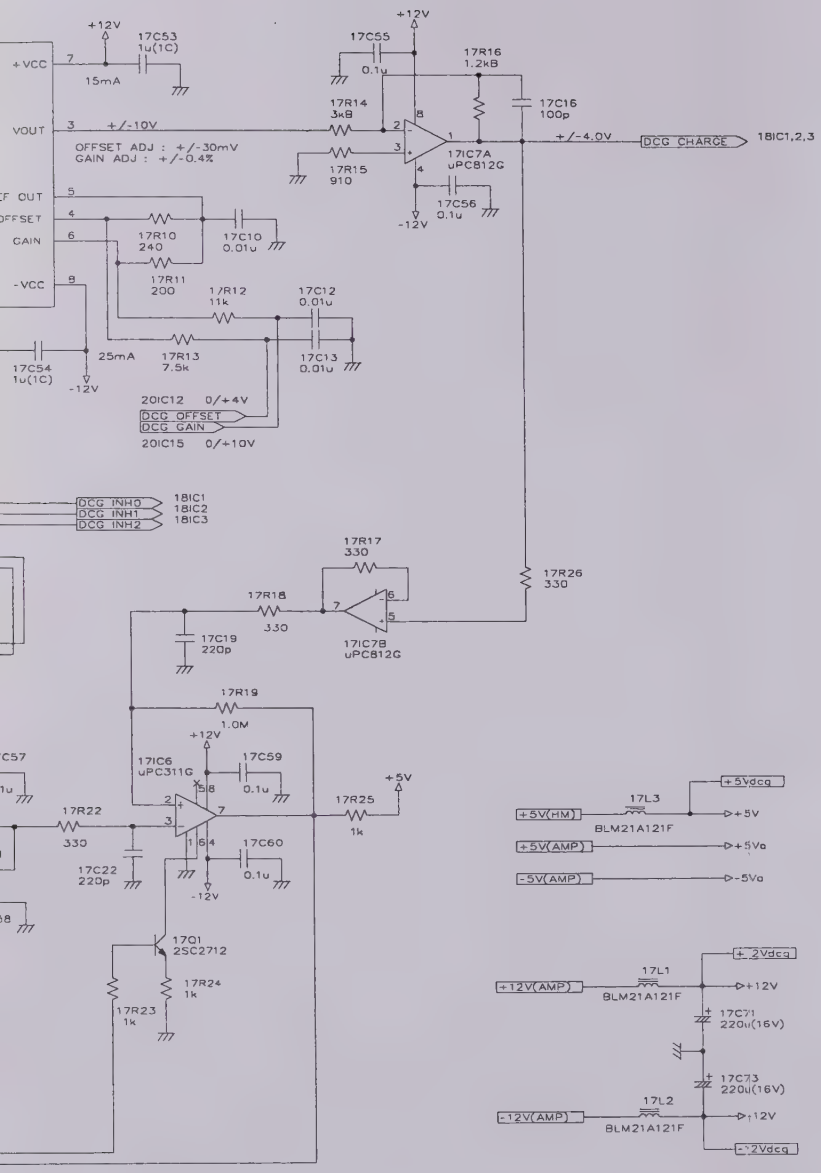
+12V
17C53
1u(1C)
+VCC
7
15mA
VOUT
3
+/-10V
OFFSET ADJ : +/-30mV
GAIN ADJ : +/-0.4%
-VCC
9
17C54
1u(1C)
-12V
25mA
17R10
240
17C10
0.01u
17R11
200
17R12
11k
17C12
0.01u
17R13
7.5k
17C13
0.01u
20IC12 0/+4V
DCG OFFSET
DCG GAIN
20IC15 0/+10V
17C55
0.1u
17R16
1.2kB
17C16
100p
17R14
3kB
17R15
910
17IC7A
uPC812C
+/-4.0V
DCG CHARGE
18IC1,2,3
17C56
0.1u
DCG INH0
DCG INH1
DCG INH2
18IC1
18IC2
18IC3
17R17
330
17R18
330
17IC7B
uPC812C
17R26
330
17C19
220p
17R19
1.0M
17IC6
uPC311G
17C59
0.1u
17R22
330
17C22
220p
17C60
0.1u
17R25
1k
+5V
17Q1
2SC2712
17R24
1k
17R23
1k
17L3
BLM21A121F
+5V(HM)
+5V(AMP)
-5V(AMP)
+5Vdcg
+5V
+5Va
-5Va
17L1
BLM21A121F
+12V(AMP)
+12V
17C71
220u(16V)
17C73
220u(16V)
17L2
BLM21A121F
-12V(AMP)
-12V
+12Vdcg
-12Vdcg

E 1/2 (17)

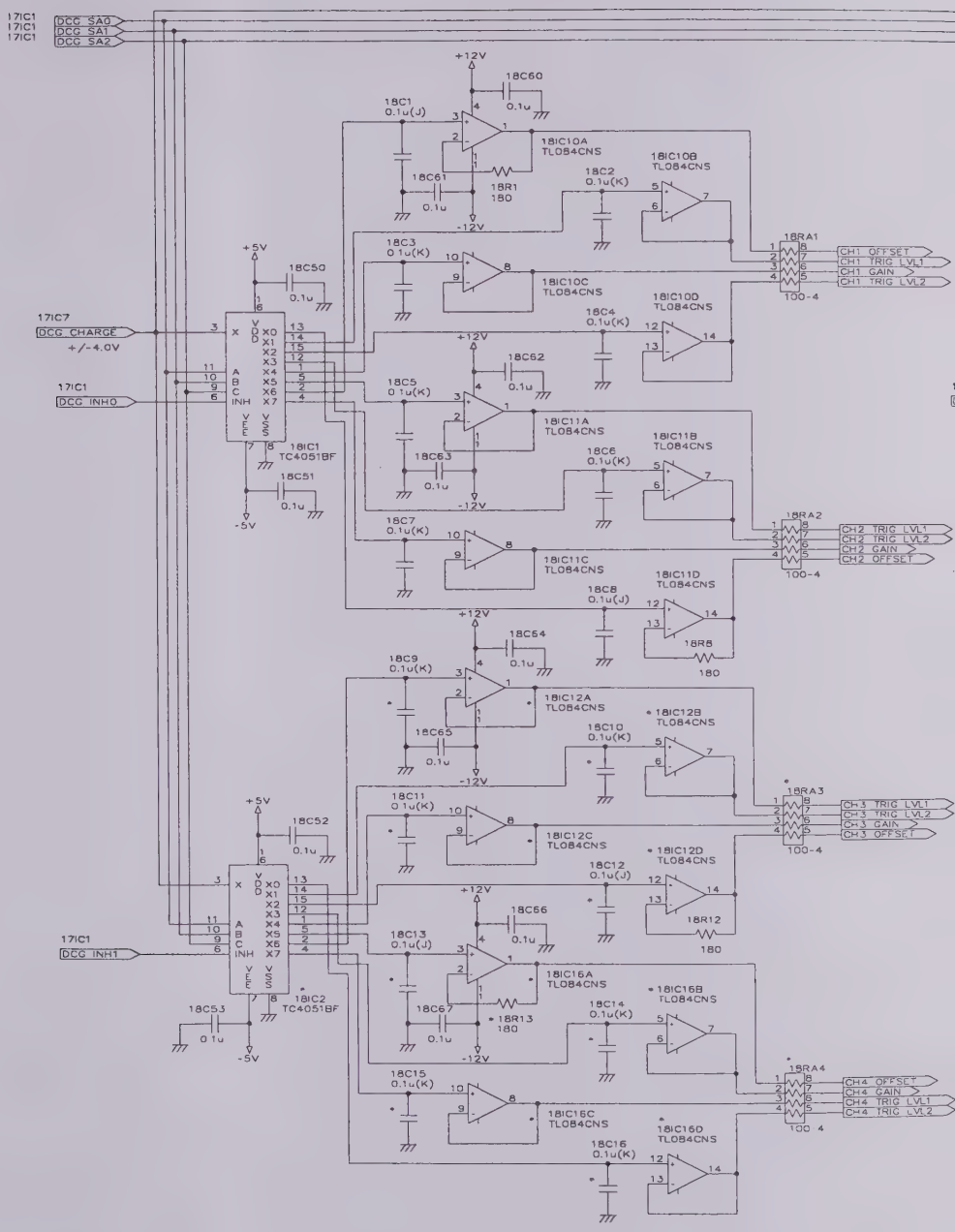
17IC1 DCG SA0
17IC1 DCG SA1
17IC1 DCG SA2
+12V
18C60
0.1u
18C1
0.1u(J)
18IC10A
TL084CNS
18IC10B
TL084CNS
18C2
0.1u(K)
18C61
0.1u
18R1
180
-12V
18RA1
CH1 OFFSET
CH1 TRIG LVL1
CH1 GAIN
CH1 TRIG LVL2
100-4
+5V
18C50
0.1u
18C3
0.1u(K)
18IC10C
TL084CNS
18IC10D
TL084CNS
18C4
0.1u(K)
17IC7
DCG CHARGE
+/-4.0V
17IC1
DCG INH0
18IC1
TC4051BF
+12V
18C62
0.1u
18C5
0.1u(K)
18IC11A
TL084CNS
18IC11B
TL084CNS
18C6
0.1u(K)
18C63
0.1u
-12V
18C51
0.1u
-5V
18C7
0.1u(K)
18IC11C
TL084CNS
18IC11D
TL084CNS
18C8
0.1u(J)
18R8
180
18RA2
CH2 TRIG LVL1
CH2 TRIG LVL2
CH2 GAIN
CH2 OFFSET
100-4
+12V
18C64
0.1u
18C9
0.1u(K)
18IC12A
TL084CNS
18IC12B
TL084CNS
18C10
0.1u(K)
18C65
0.1u
-12V
18C11
0.1u(K)
18IC12C
TL084CNS
18IC12D
TL084CNS
18C12
0.1u(J)
18R12
180
18RA3
CH3 TRIG LVL1
CH3 TRIG LVL2
CH3 GAIN
CH3 OFFSET
100-4
+5V
18C52
0.1u
17IC1
DCG INH1
18IC2
TC4051BF
+12V
18C66
0.1u
18C13
0.1u(J)
18IC16A
TL084CNS
18IC16B
TL084CNS
18C14
0.1u(K)
18C67
0.1u
18R13
180
18C53
0.1u
-12V
-5V
18C15
0.1u(K)
18IC16C
TL084CNS
18IC16D
TL084CNS
18C16
0.1u(K)
18RA4
CH4 OFFSET
CH4 GAIN
CH4 TRIG LVL1
CH4 TRIG LVL2
100-4

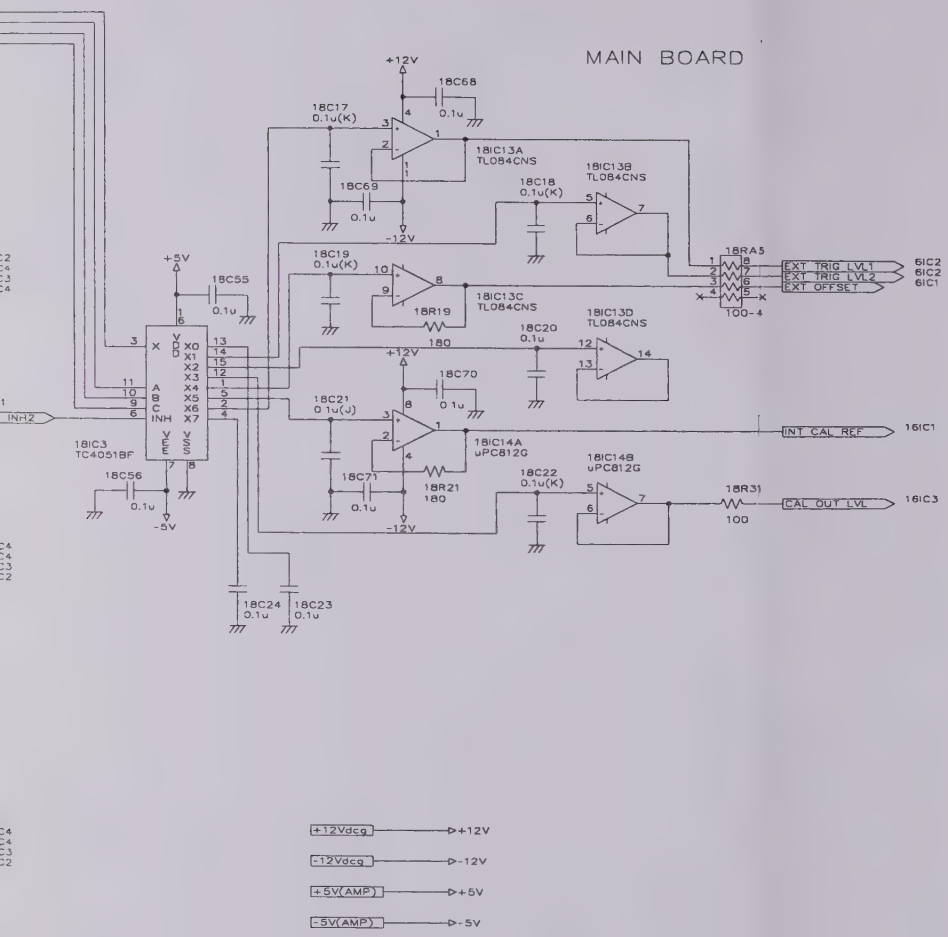

NOTE : Marked components (*) above are not mounted in LT342 & LT322.

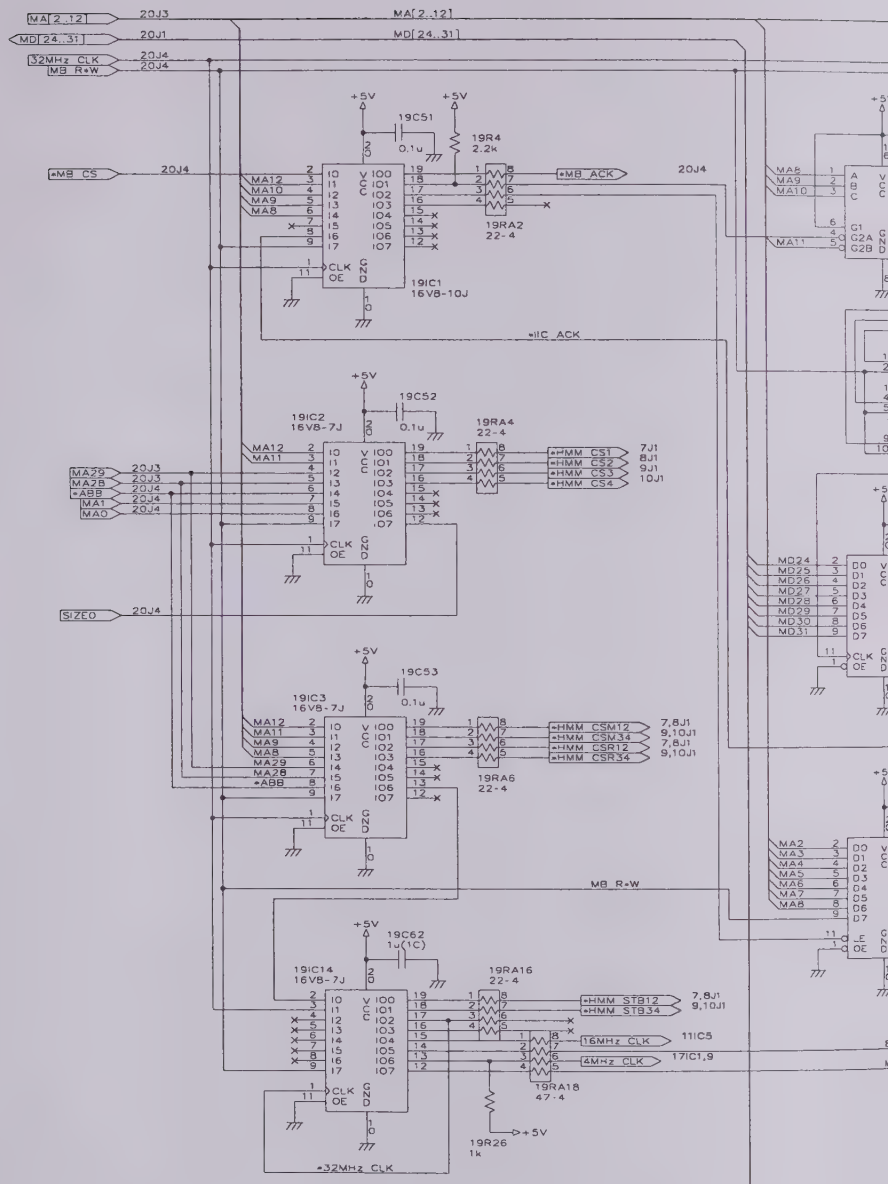
MA[2..12]
MD[24..31]
32MHz CLK
MB R+W
*MB CS
*MB ACK
*IIC ACK
SIZE0
*32MHz CLK
19C51
19R4
2.2k
19RA2
22-4
19IC1
16V8-10J
19C52
19IC2
16V8-7J
19RA4
22-4
*HMM CS1
*HMM CS2
*HMM CS3
*HMM CS4
19C53
19IC3
16V8-7J
19RA6
22-4
*HMM CSM12
*HMM CSM34
*HMM CSR12
*HMM CSR34
19C62
1u(1C)
19IC14
16V8-7J
19RA16
22-4
*HMM STB12
*HMM STB34
16MHz CLK
4MHz CLK
19RA18
47-4
19R26
1k

MAIN C

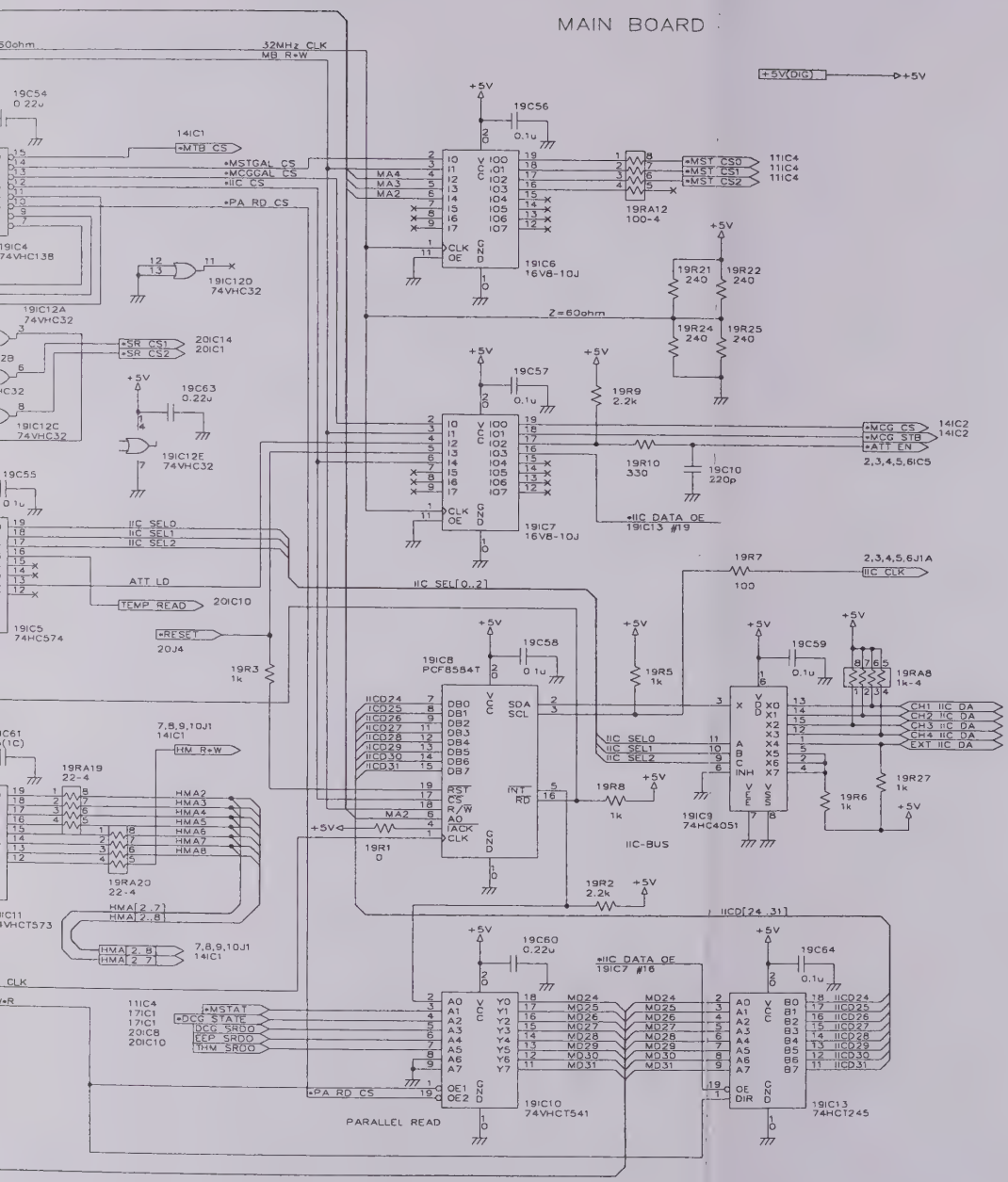
32MHz CLK
MB R+W
+5V(DIG)
+5V
19C54 0.22u
19C56 0.1u
14IC1
•MTB CS
•MSTGAL CS
•MCGGAL CS
•IIC CS
•PA RD CS
MA4
MA3
MA2
19IC6 16V8-10J
19RA12 100-4
•MST CS0
•MST CS1
•MST CS2
11IC4
19R21 240
19R22 240
19R24 240
19R25 240
Z=60ohm
19IC4 74VHC138
19IC12D 74VHC32
19IC12A 74VHC32
19IC12C 74VHC32
19IC12E 74VHC32
•SR CS1
•SR CS2
20IC14
20IC1
19C63 0.22u
19C57 0.1u
19R9 2.2k
19R10 330
19C10 220p
•MCG CS
•MCG STB
•ATT EN
14IC2
2,3,4,5,6IC5
19IC7 16V8-10J
•IIC DATA OE
19IC13 #19
19C55 0.1u
IIC SEL0
IIC SEL1
IIC SEL2
ATT LD
TEMP READ
20IC10
19IC5 74HC574
•RESET
20J4
IIC SEL[0..2]
19R7 100
2,3,4,5,6J1A
IIC CLK
19IC8 PCF8584T
19C58 0.1u
19R5 1k
19C59 0.1u
19RA8 1k-4
19R3 1k
IICD24
IICD25
IICD26
IICD27
IICD28
IICD29
IICD30
IICD31
DB0
DB1
DB2
DB3
DB4
DB5
DB6
DB7
SDA
SCL
RST
CS
R/W
A0
IACK
CLK
INT
RD
19R8 1k
19IC9 74HC4051
CH1 IIC DA
CH2 IIC DA
CH3 IIC DA
CH4 IIC DA
EXT IIC DA
2J1A
3J1A
4J1A
5J1A
6J1A
19R27 1k
19R6 1k
IIC-BUS
19R1 0
19R2 2.2k
IICD[24..31]
7,8,9,10J1
14IC1
HW R+W
19RA19 22-4
19RA20 22-4
HMA2
HMA3
HMA4
HMA5
HMA6
HMA7
HMA8
HMA[2..7]
HMA[2..8]
HMA[2,8]
HMA[2,7]
19C60 0.22u
•IIC DATA OE
19IC7 #16
19C64 0.1u
11IC4
17IC1
17IC1
20IC8
20IC10
•MSTAT
•DCG STATE
DCG SRDO
EEP SRDO
THM SRDO
•PA RD CS
PARALLEL READ
19IC10 74VHCT541
19IC13 74HCT245
MD24
MD25
MD26
MD27
MD28
MD29
MD30
MD31

NT 1/2 (19)

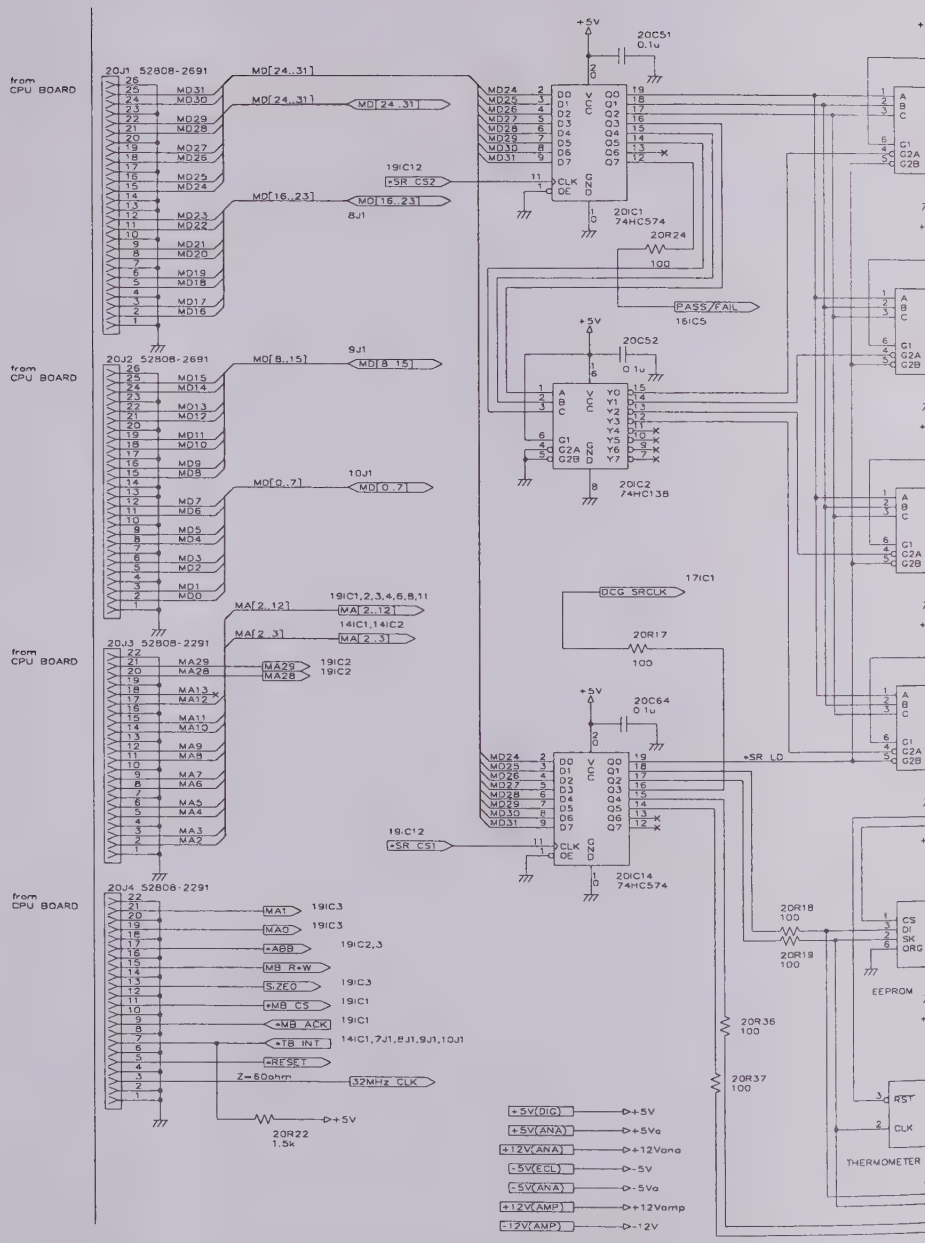

NOTE : Marked components (*) are not mounted in LT342 & LT322.

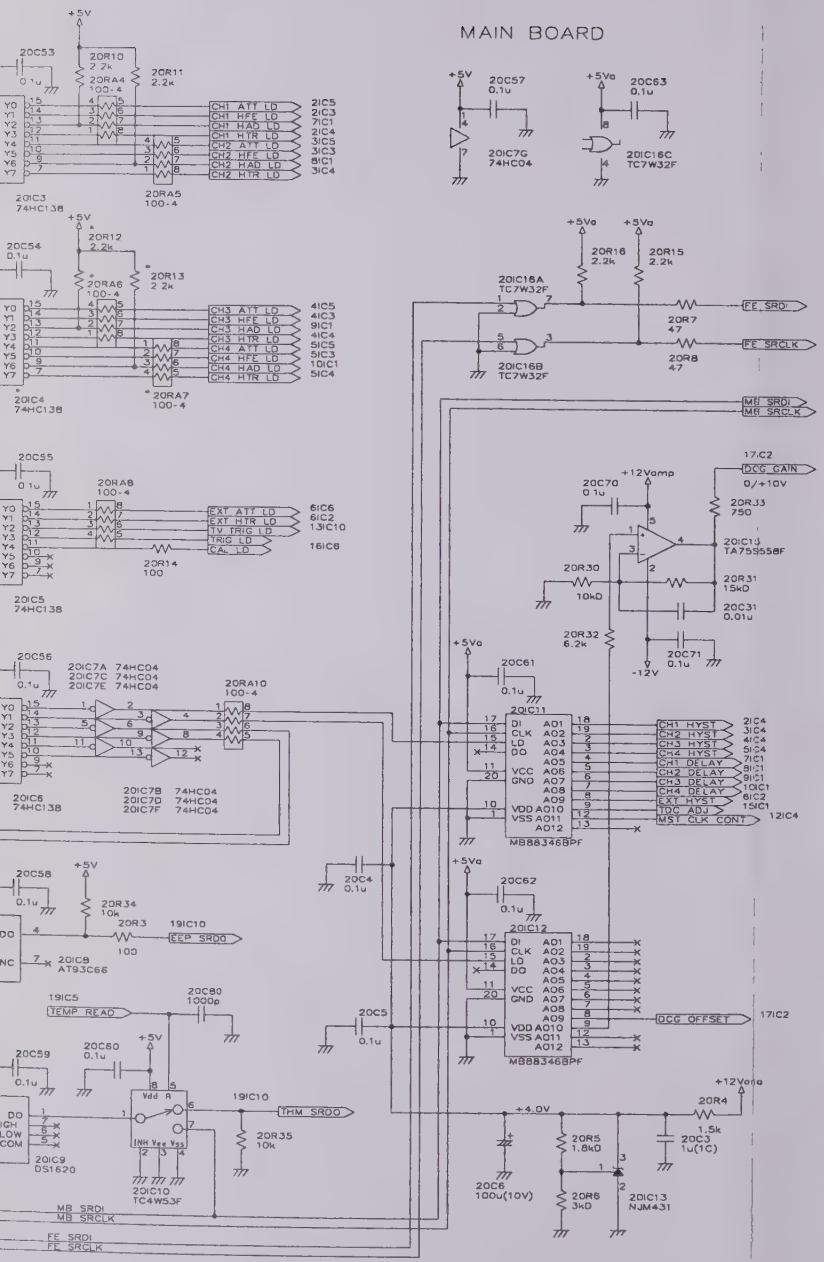
MAIN BOARD
+5V
20C53
0.1u
20R10
2.2k
20RA4
100-4
20R11
2.2k
CH1 ATT LD
CH1 HFE LD
CH1 HAD LD
CH1 HTR LD
CH2 ATT LD
CH2 HFE LD
CH2 HAD LD
CH2 HTR LD
20RA5
100-4
20IC3
74HC138
20C54
20R12
20RA6
20R13
CH3 ATT LD
CH3 HFE LD
CH3 HAD LD
CH3 HTR LD
CH4 ATT LD
CH4 HFE LD
CH4 HAD LD
CH4 HTR LD
20RA7
20IC4
74HC138
20C55
20RA8
EXT ATT LD
EXT HTR LD
TV TRIG LD
TRIG LD
CAL LD
20R14
100
20IC5
74HC138
20C56
20IC7A 74HC04
20IC7C 74HC04
20IC7E 74HC04
20RA10
20IC7B 74HC04
20IC7D 74HC04
20IC7F 74HC04
20IC6
74HC138
20C57
0.1u
20IC7G
74HC04
+5Va
20C63
20IC16C
TC7W32F
+12Vama
20R16
2.2k
20R15
20IC18A
TC7W32F
FE SRDI
20R7
47
FE SRCLK
20R8
20IC16B
MB SRDI
MB SRCLK
17C2
DCG GAIN
0/+10V
20C70
20R33
750
20IC13
TA75S558F
20R30
10kΩ
20R31
15kΩ
20C31
0.01u
20R32
6.2k
20C71
-12V
20C61
20IC11
DI
CLK
LD
DO
VCC
GND
VDD
VSS
A01
A02
A03
A04
A05
A06
A07
A08
A09
A010
A011
A012
MB88346BPF
CH1 HYST
CH2 HYST
CH3 HYST
CH4 HYST
CH1 DELAY
CH2 DELAY
CH3 DELAY
CH4 DELAY
EXT HYST
TOC ADJ
MST CLK CONT
20C4
0.1u
20C62
20IC12
DCG OFFSET
20C5
20C58
20R34
10k
20R3
100
EEP SRDO
20IC8
AT93C66
19C5
TEMP READ
20C80
1000p
20C60
20C59
20IC9
DS1620
20IC10
TC4W53F
INH Vee Vss
19IC10
THM SRDO
20R35
10k
+4.0V
20R4
1.5k
20R5
1.8kΩ
20C3
1u(1C)
20C6
100u(10V)
20R6
3kΩ
20IC13
NJM431
MB SRDI
MB SRCLK
FE SRDI
FE SRCLK

NT 2/2 (20)

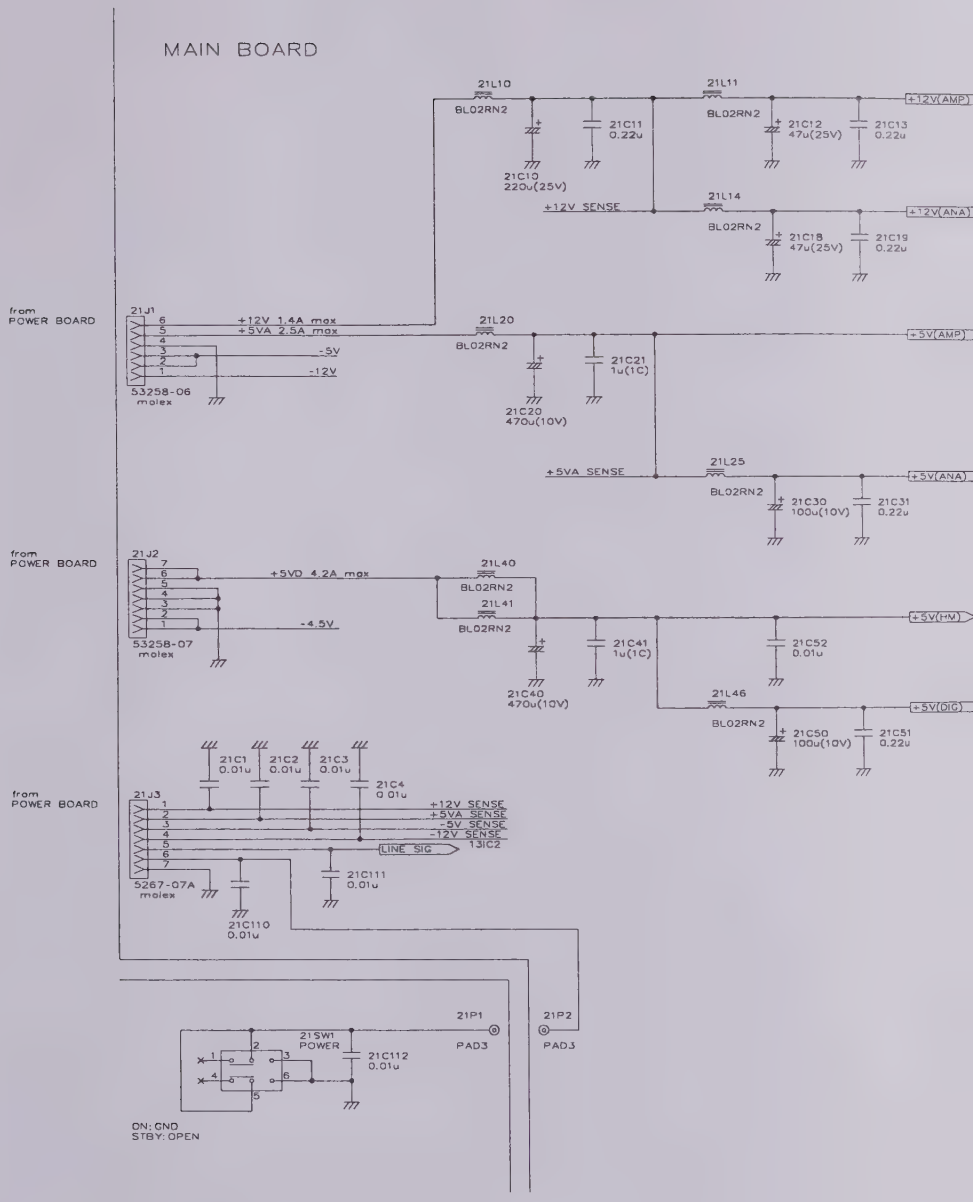
MAIN BOARD
21L10
BL02RN2
21L11
BL02RN2
+12V(AMP)
21C11
0.22u
21C12
47u(25V)
21C13
0.22u
21C10
220u(25V)
+12V SENSE
21L14
BL02RN2
+12V(ANA)
21C18
47u(25V)
21C19
0.22u
from
POWER BOARD
21J1
+12V 1.4A max
+5VA 2.5A max
-5V
-12V
53258-06
molex
21L20
BL02RN2
+5V(AMP)
21C21
1u(1C)
21C20
470u(10V)
+5VA SENSE
21L25
BL02RN2
+5V(ANA)
21C30
100u(10V)
21C31
0.22u
from
POWER BOARD
21J2
+5VD 4.2A max
-4.5V
53258-07
molex
21L40
BL02RN2
21L41
BL02RN2
+5V(HV)
21C41
1u(1C)
21C52
0.01u
21C40
470u(10V)
21L46
BL02RN2
+5V(DIG)
21C50
100u(10V)
21C51
0.22u
from
POWER BOARD
21J3
21C1
0.01u
21C2
0.01u
21C3
0.01u
21C4
0.01u
+12V SENSE
+5VA SENSE
-5V SENSE
-12V SENSE
LINE SIG
13IC2
5267-07A
molex
21C111
0.01u
21C110
0.01u
21P1
PAD3
21P2
PAD3
21SW1
POWER
21C112
0.01u
ON: GND
STBY: OPEN

POWER CO

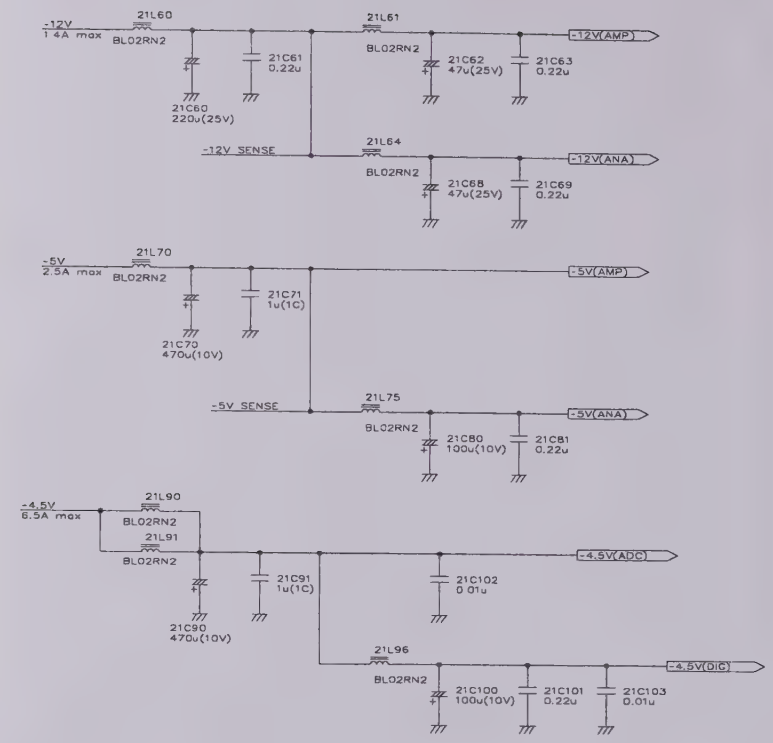
-12V
1.4A max
21L60
BL02RN2
21C61
0.22u
21C60
220u(25V)
21L61
BL02RN2
21C62
47u(25V)
21C63
0.22u
-12V(AMP)
-12V SENSE
21L64
BL02RN2
21C68
47u(25V)
21C69
0.22u
-12V(ANA)
-5V
2.5A max
21L70
BL02RN2
21C71
1u(1C)
21C70
470u(10V)
-5V(AMP)
-5V SENSE
21L75
BL02RN2
21C80
100u(10V)
21C81
0.22u
-5V(ANA)
-4.5V
6.5A max
21L90
BL02RN2
21L91
BL02RN2
21C91
1u(1C)
21C90
470u(10V)
21C102
0.01u
-4.5V(ADC)
21L96
BL02RN2
21C100
100u(10V)
21C101
0.22u
21C103
0.01u
-4.5V(DIG)

NECTOR (21)

MAIN

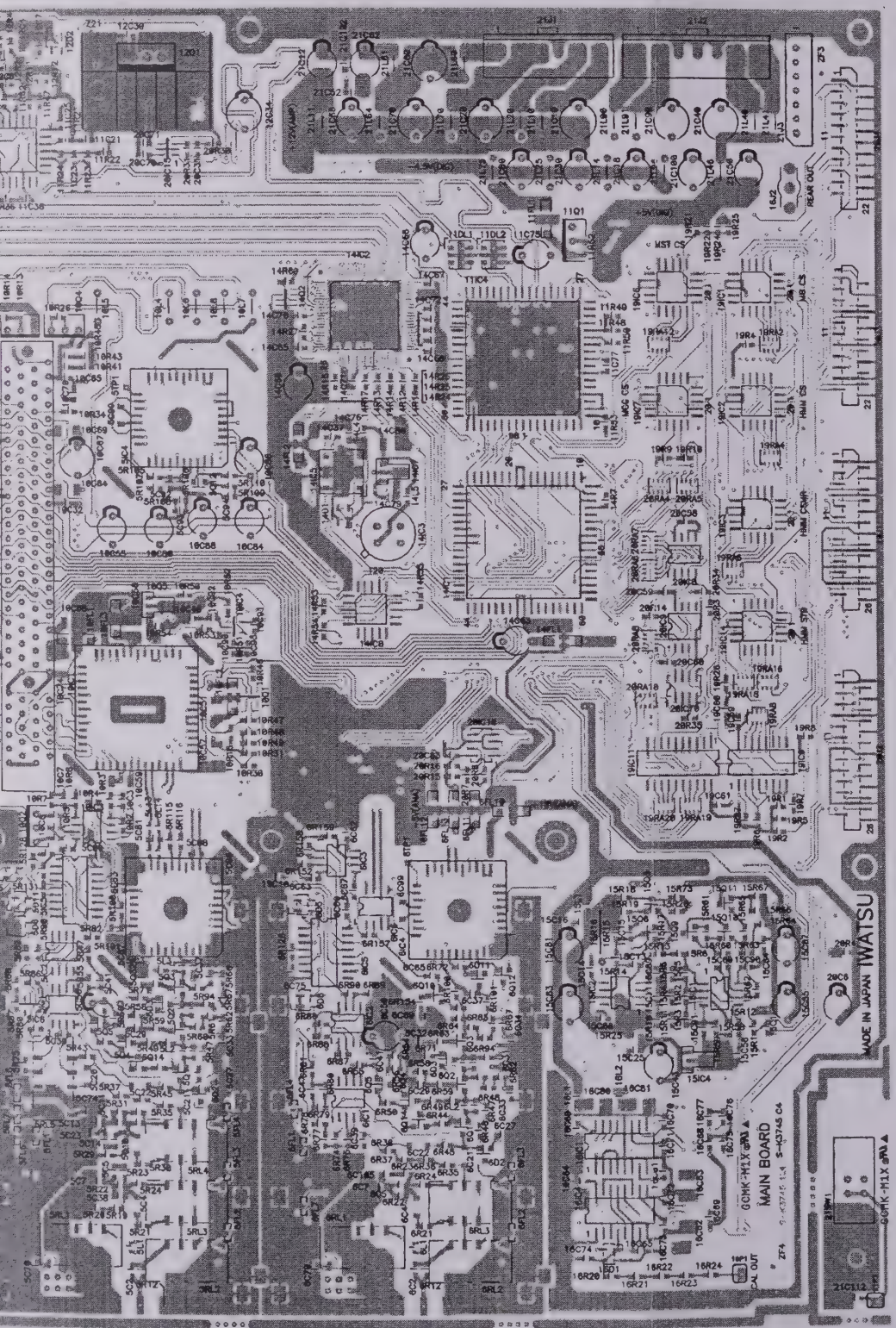

OARD (1/2)

MAIN B

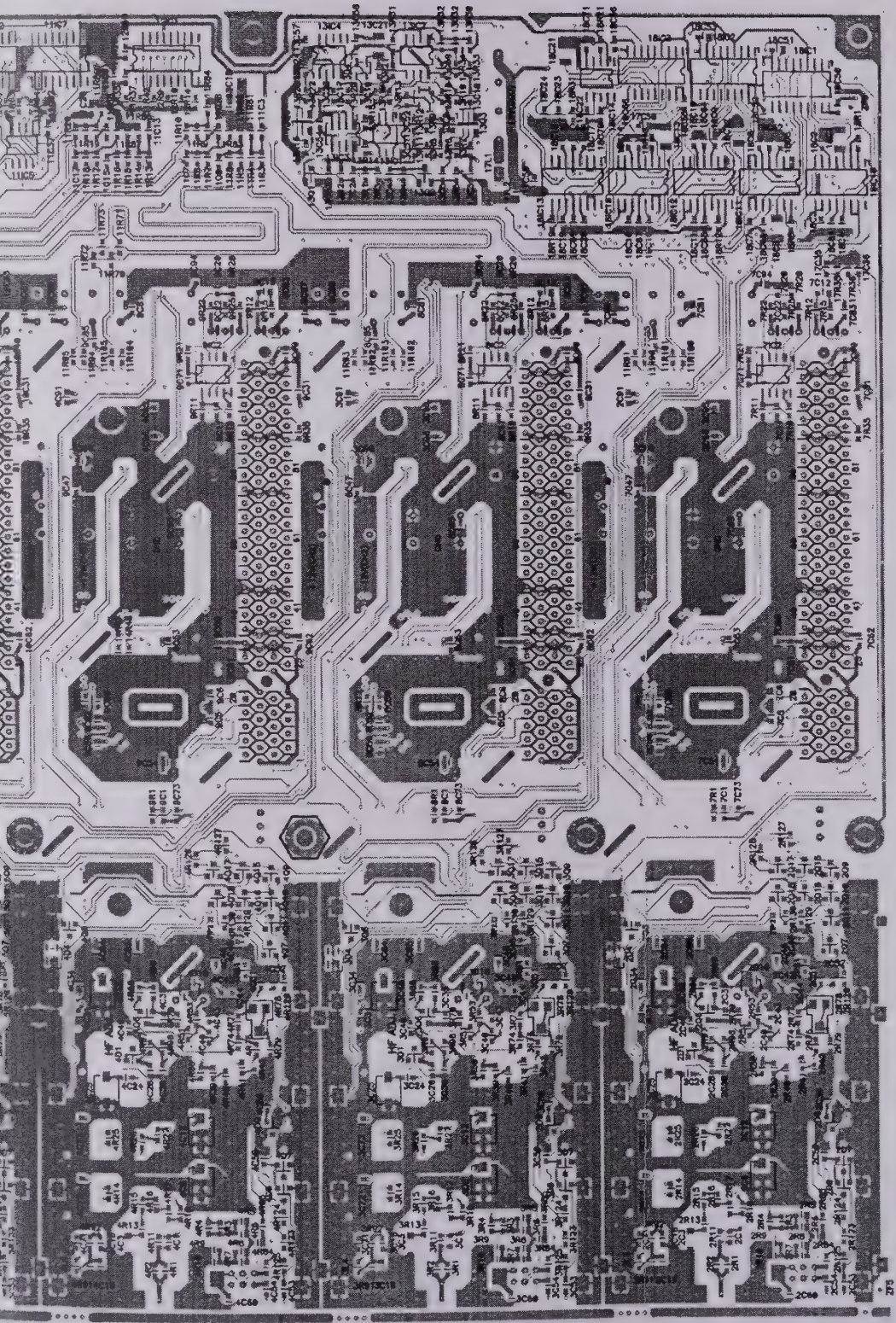

OARD (2/2)

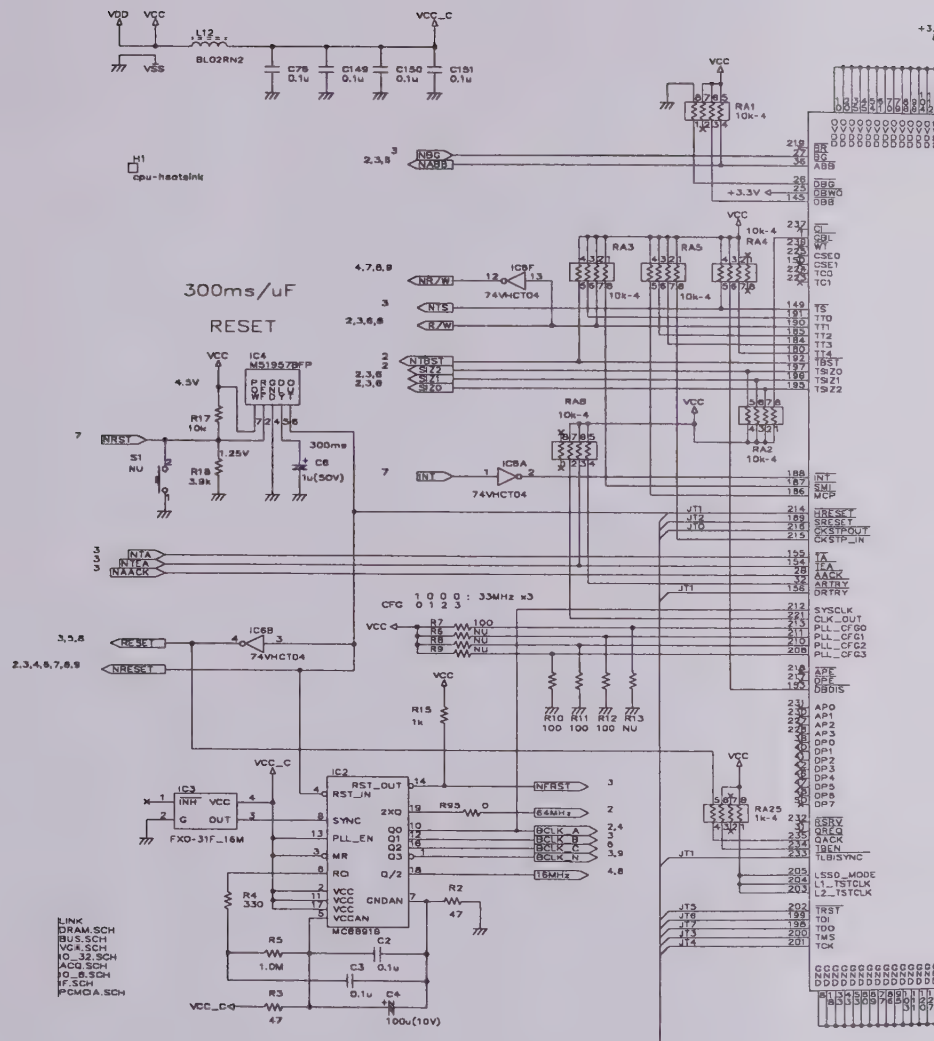

VDD
VCC
VSS
L12
BL02RN2
VCC_C
C76 0.1u
C149 0.1u
C150 0.1u
C151 0.1u
H1
cpu-heatsink
300ms/uF
RESET
IC4
M51957BFP
R17 10k
R18 3.9k
S1 NU
1.25V
4.5V
300ms
C6 1u(50V)
NRST
NBG
NABB
NR/W
NTS
R/W
NTBST
SIZ2
SIZ1
SIZ0
INT
IC8F
74VHCT04
IC8A
74VHCT04
RA1 10k-4
RA2 10k-4
RA3 10k-4
RA4 10k-4
RA5 10k-4
RA8 10k-4
+3.3V
INTA
INTEA
NAACK
RESET
NRESET
IC6B
74VHCT04
CFG 1 0 0 0 : 33MHz x3
0 1 2 3
R7 100
R6 NU
R8 NU
R9 NU
R10 100
R11 100
R12 100
R13 NU
R15 1k
IC3
FXO-31F_16M
IC2
MC88918
RST_OUT
RST_IN
SYNC
PLL_EN
MR
RCI
VCC
VCCAN
GNDAN
2XQ
Q0
Q1
Q2
Q3
Q/2
R95 0
NFRST
64MHz
BCLK_A
BCLK_B
BCLK_C
BCLK_N
16MHz
R2 47
R4 330
R5 1.0M
C2 0.1u
C3 0.1u
R3 47
C4 100u(10V)
LINK
DRAM.SCH
BUS.SCH
VGA.SCH
IO_32.SCH
ACQ.SCH
IO_8.SCH
IF.SCH
PCMCIA.SCH
RA25 1k-4
JT1
JT2
JT3
JT4
JT5
JT6
JT7
JT8
JT10
JT[0..7]
BR
BG
ABB
DBG
DBWO
DBB
CI
CBL
WT
CSE0
CSE1
TC0
TC1
TS
TT0
TT1
TT2
TT3
TT4
TBST
TSIZ0
TSIZ1
TSIZ2
INT
SMI
MCP
HRESET
SRESET
CKSTPOUT
CKSTP_IN
TA
TEA
AACK
ARTRY
DRTRY
SYSCLK
CLK_OUT
PLL_CFG0
PLL_CFG1
PLL_CFG2
PLL_CFG3
APE
DPE
DBDIS
AP0
AP1
AP2
AP3
DP0
DP1
DP2
DP3
DP4
DP5
DP6
DP7
GSRV
QREQ
QACK
TBEN
TLBISYNC
LSSD_MODE
L1_TSTCLK
L2_TSTCLK
TRST
TDI
TDO
TMS
TCK

C

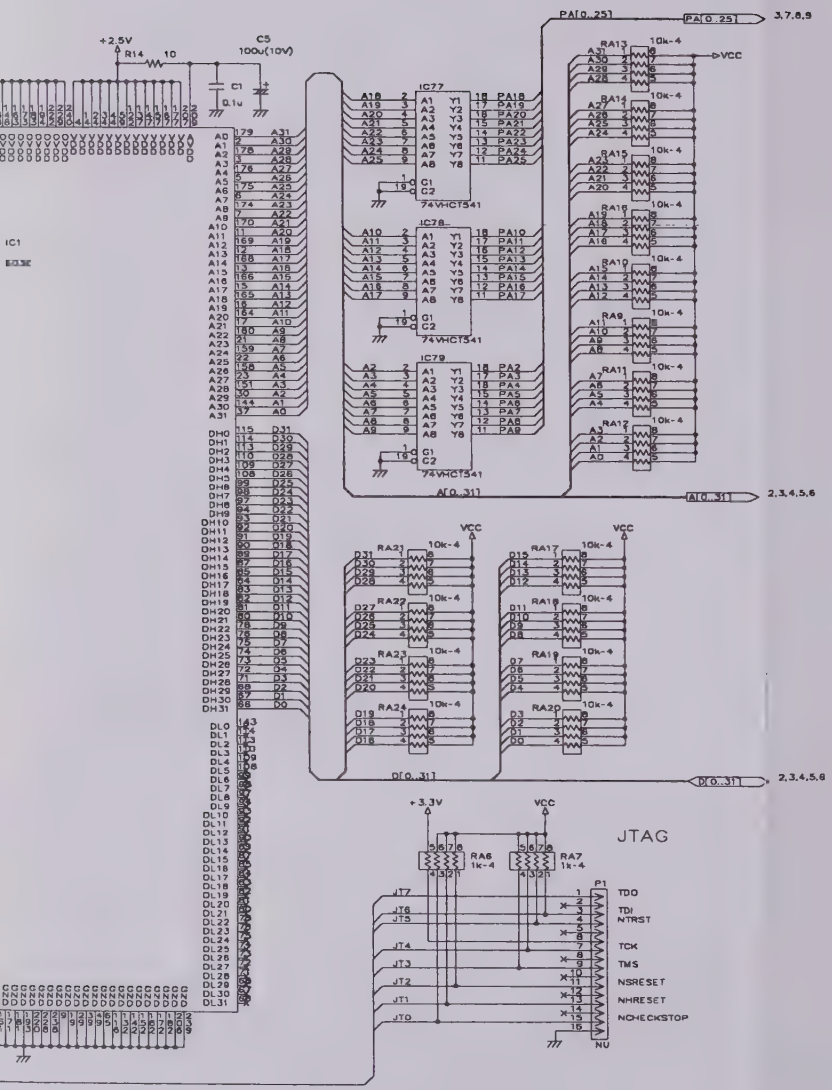
+2.5V
R14 10
C5 100u(10V)
C1 0.1u
IC1
IC77
IC78
IC79
74VHCT541
PA[0..25]
PA[0..25] 3,7,8,9
A[0..31]
A[0..31] 2,3,4,5,6
D[0..31]
D[0..31] 2,3,4,5,6
VCC
+3.3V
RA6 1k-4
RA7 1k-4
JTAG
P1
TDO
TDI
NTRST
TCK
TMS
NSRESET
NHRESET
NCHECKSTOP
NU

U (31)

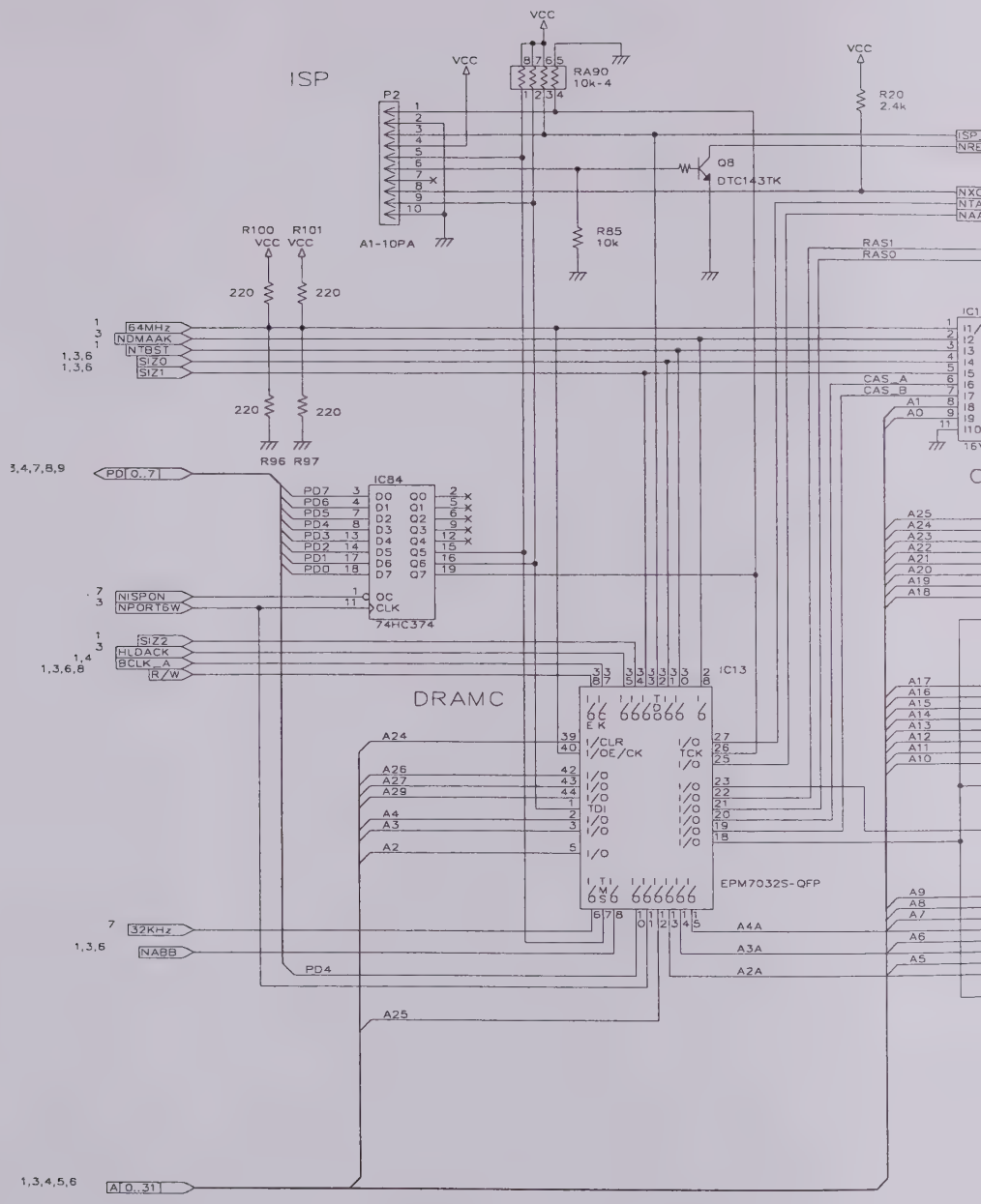
ISP
VCC
RA90
10k-4
P2
A1-10PA
R20
2.4k
Q8
DTC143TK
R85
10k
R100
R101
220
R96
R97
64MHz
NDMAAK
INTEST
SIZ0
SIZ1
RAS1
RAS0
CAS_A
CAS_B
A1
A0
PD[0..7]
IC84
74HC374
NISPON
NPORTRW
SIZ2
HLDACK
BCLK_A
R/W
IC13
DRAMC
EPM7032S-QFP
32KHz
NABB
PD4
A25
A[0..31]
A24
A26
A27
A29
A4
A3
A2
A4A
A3A
A2A

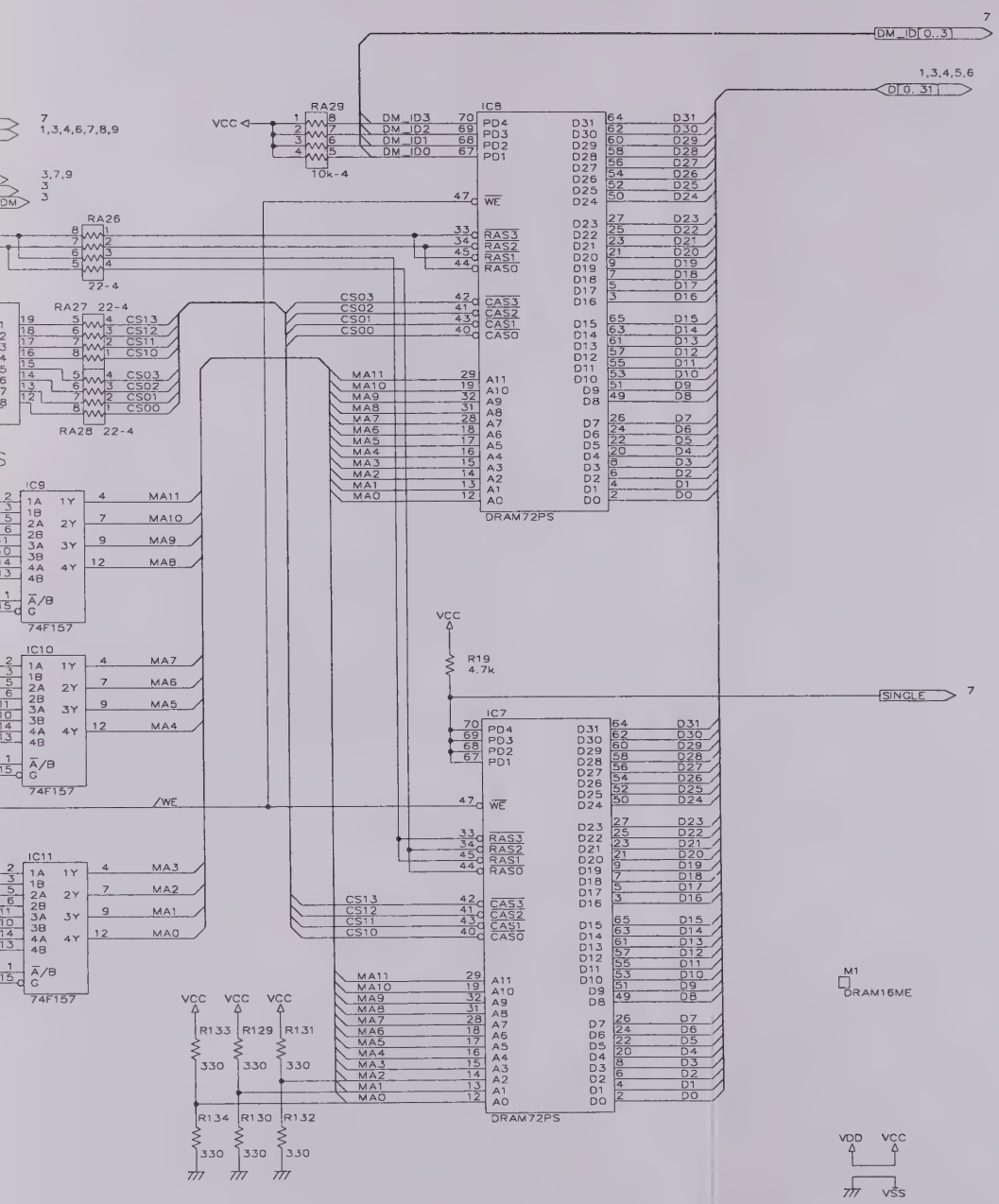

DM_ID[0..3]
D[0..31]
RA29
10k-4
IC8
DRAM72PS
RA26
22-4
RA27 22-4
RA28 22-4
IC9
74F157
IC10
74F157
IC11
74F157
R19
4.7k
SINGLE
IC7
DRAM72PS
M1
DRAM16ME
VDD
VCC
VSS

M (32)

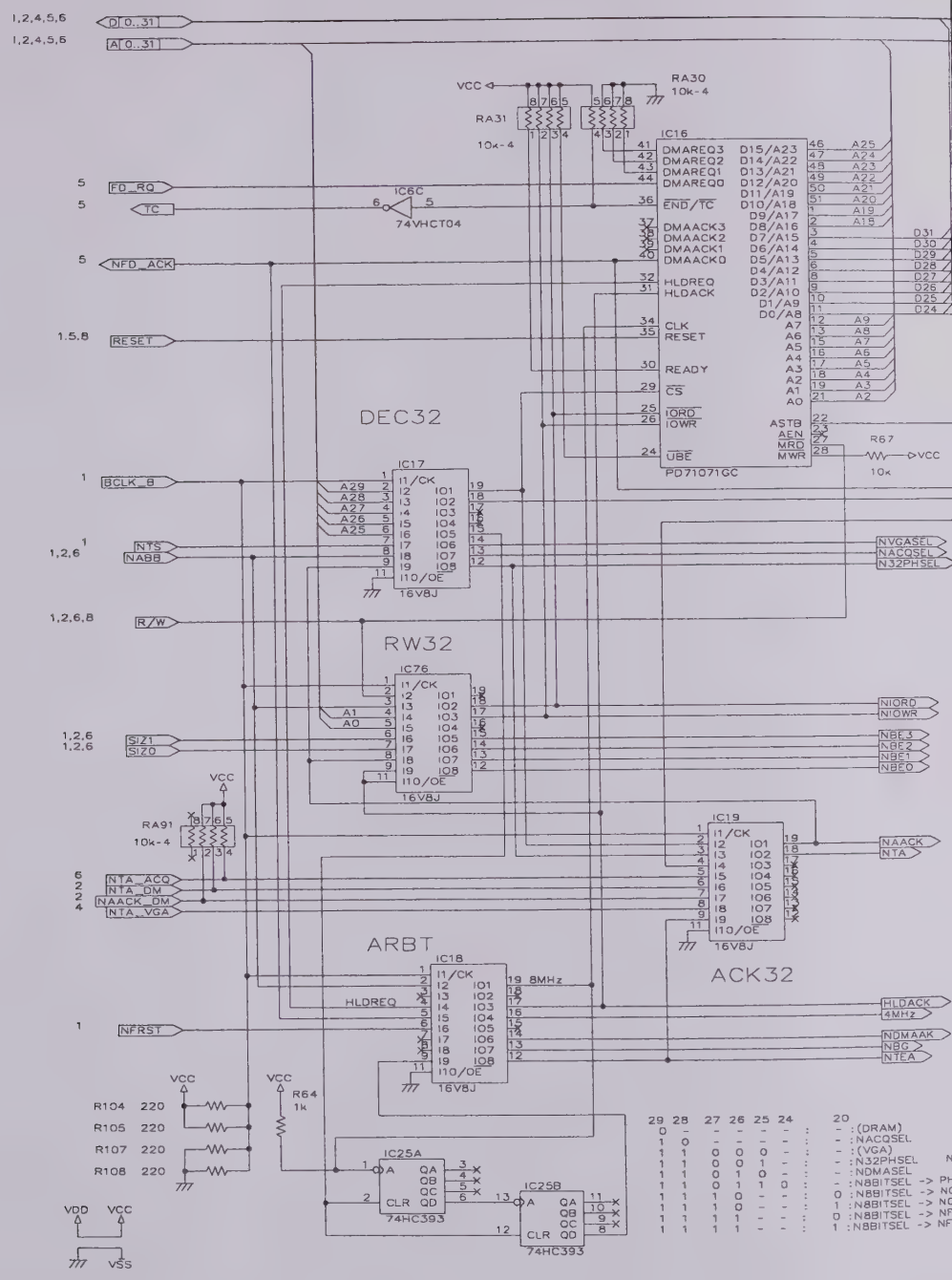
D 0..31
A 0..31
VCC
RA30
10k-4
RA31
10k-4
IC16
DMAREQ3
DMAREQ2
DMAREQ1
DMAREQ0
END/TC
DMAACK3
DMAACK2
DMAACK1
DMAACK0
HLDREQ
HLDACK
CLK
RESET
READY
CS
IORD
IOWR
UBE
D15/A23
D14/A22
D13/A21
D12/A20
D11/A19
D10/A18
D9/A17
D8/A16
D7/A15
D6/A14
D5/A13
D4/A12
D3/A11
D2/A10
D1/A9
D0/A8
A7
A6
A5
A4
A3
A2
A1
A0
ASTB
AEN
MRD
MWR
PD71071GC
FD_RQ
TC
IC6C
74VHCT04
NFD_ACK
RESET
DEC32
IC17
BCLK_B
NTS
NABB
R/W
RW32
IC76
SIZ1
SIZ0
A1
A0
16V8J
R67
10k
NVGASEL
NACQSEL
N32PHSEL
NIORD
NIOWR
NBE3
NBE2
NBE1
NBE0
RA91
10k-4
IC19
NAACK
NTA
NTA_ACQ
NTA_DM
NAACK_DM
NTA_VGA
ARBT
IC18
8MHz
HLDREQ
NFRST
HLDACK
4MHz
NDMAAK
NBG
NTEA
R104 220
R105 220
R107 220
R108 220
R64
1k
IC25A
IC25B
74HC393
VDD
VCC
VSS
29 28 27 26 25 24 20
(DRAM)
NACQSEL
(VGA)
N32PHSEL
NDMASEL
N8BITSEL -> PH
N8BITSEL -> NC
N8BITSEL -> NF
N8BITSEL -> NF

BUS CO

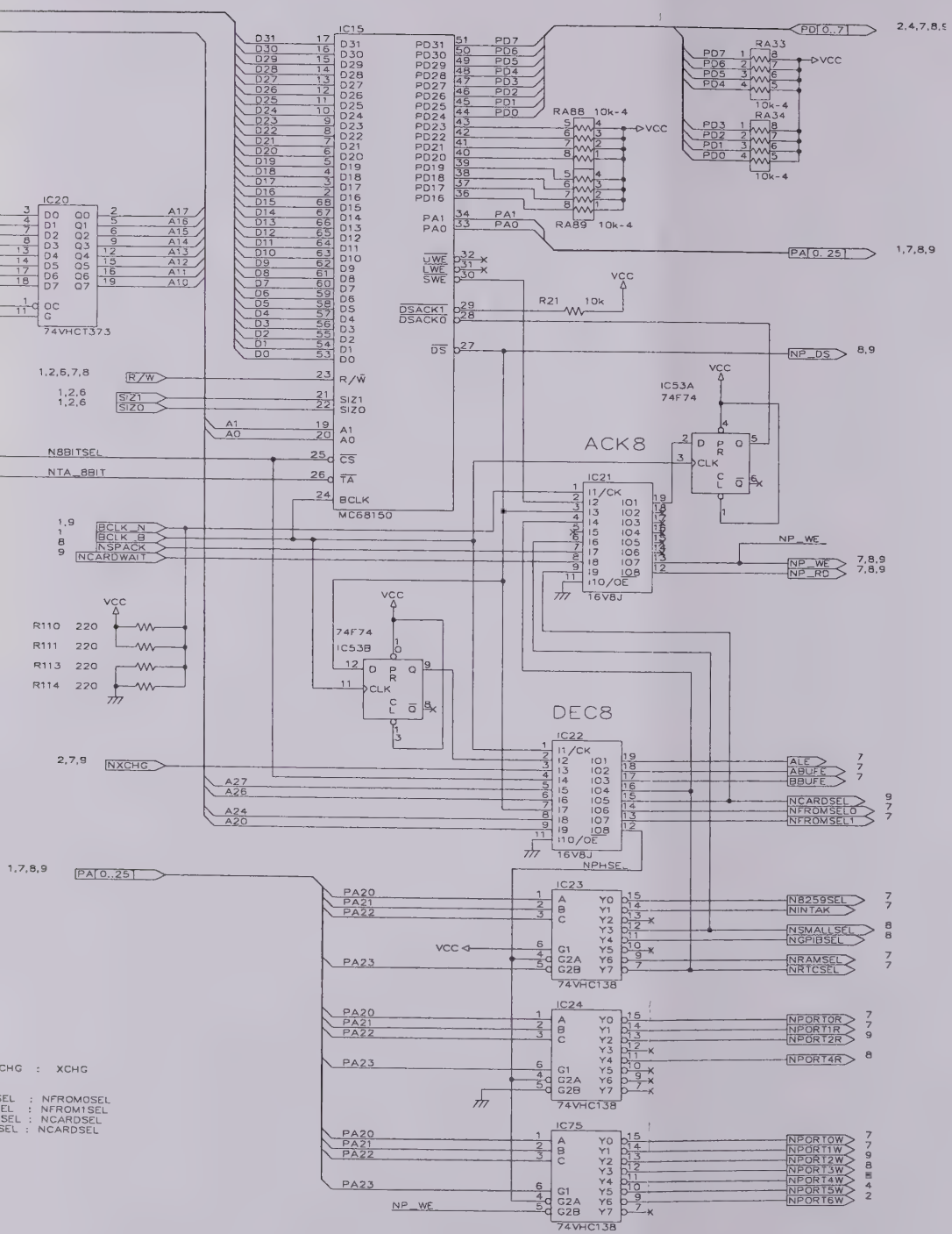
IC15
MC68150
IC20
74VHCT373
ACK8
DEC8
IC21
IC22
IC23
IC24
IC75
IC53A
74F74
IC53B
74F74
16V8J
74VHC138
RA33
RA34
RA88 10k-4
RA89 10k-4
R21 10k
R110 220
R111 220
R113 220
R114 220
VCC
PD[0..7]
PA[0..25]
NP_DS
NP_WE
NP_RD
NPHSE
ALE
ABUFE
BBUFE
NCARDSEL
NFROMSEL0
NFROMSEL1
N8259SEL
NINTAK
NSMALLSEL
NGPIBSEL
NRAMSEL
NRTCSEL
NPORT0R
NPORT1R
NPORT2R
NPORT4R
NPORT0W
NPORT1W
NPORT2W
NPORT3W
NPORT4W
NPORT5W
NPORT6W
BCLK_N
BCLK_B
NSPACK
NCARDWAIT
N8BITSEL
NTA_8BIT
R/W
SIZ1
SIZ0
A1
A0
CS
TA
BCLK
DSACK1
DSACK0
DS
UWE
LWE
SWE
NXCHG
CHG : XCHG
EL : NFROMOSEL
EL : NFROM1SEL
SEL : NCARDSEL
SEL : NCARDSEL

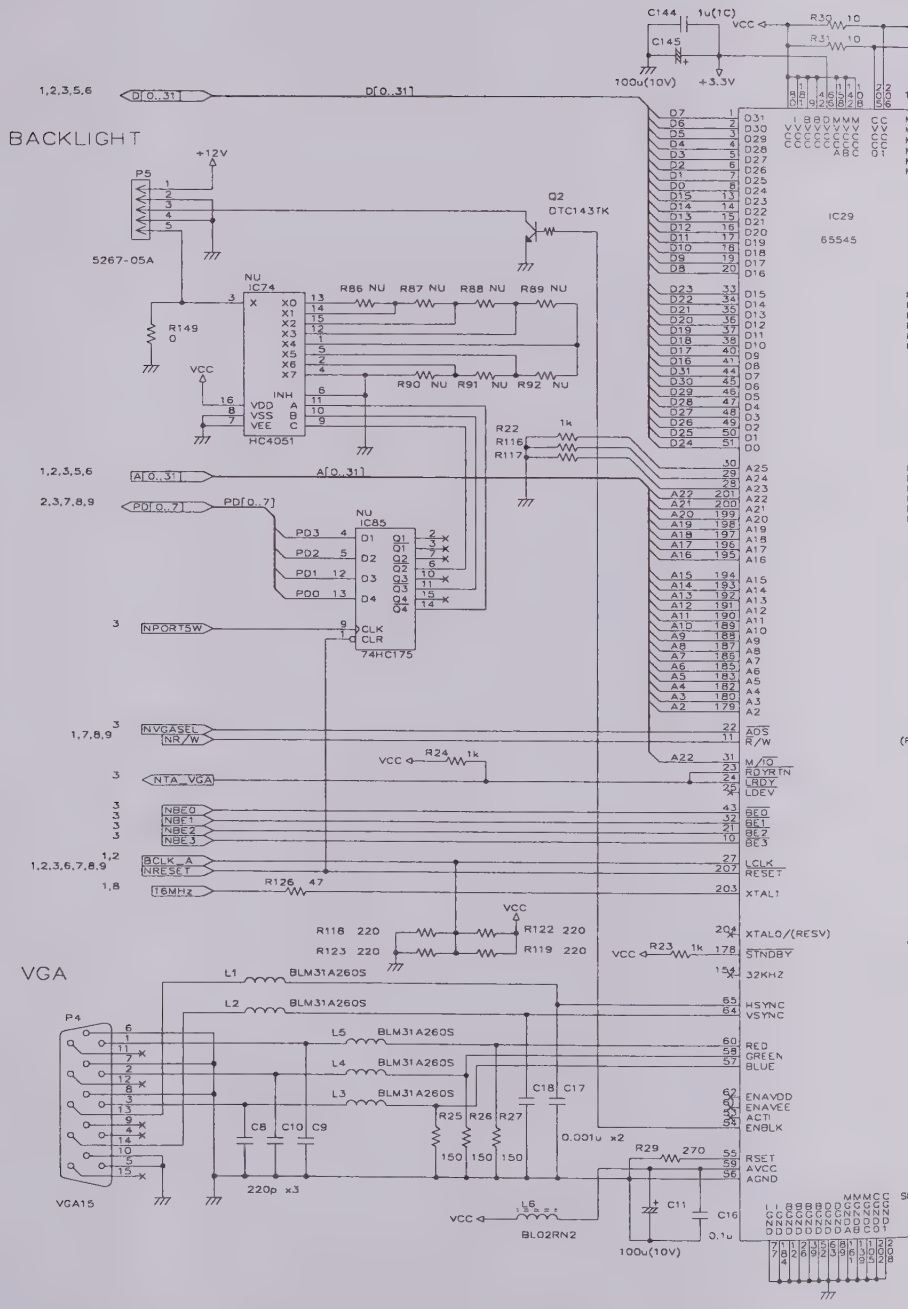
BACKLIGHT
VGA
IC29
65545
IC74
HC4051
IC85
74HC175
Q2
DTC143TK
P5
5267-05A
P4
VGA15
BL02RN2
100u(10V)
+3.3V
+12V
VCC
NPORTSW
NVGASEL
NR/W
NTA_VGA
NBE0
NBE1
NBE2
NBE3
BCLK_A
NRESET
16MHz
XTAL1
XTAL0/(RESV)
STNDBY
32KHZ
HSYNC
VSYNC
RED
GREEN
BLUE
ENAVDD
ENAVEE
ACTI
ENBLK
RSET
AVCC
AGND
BLM31A260S
220p x3
0.001u x2
0.1u

VGA CO

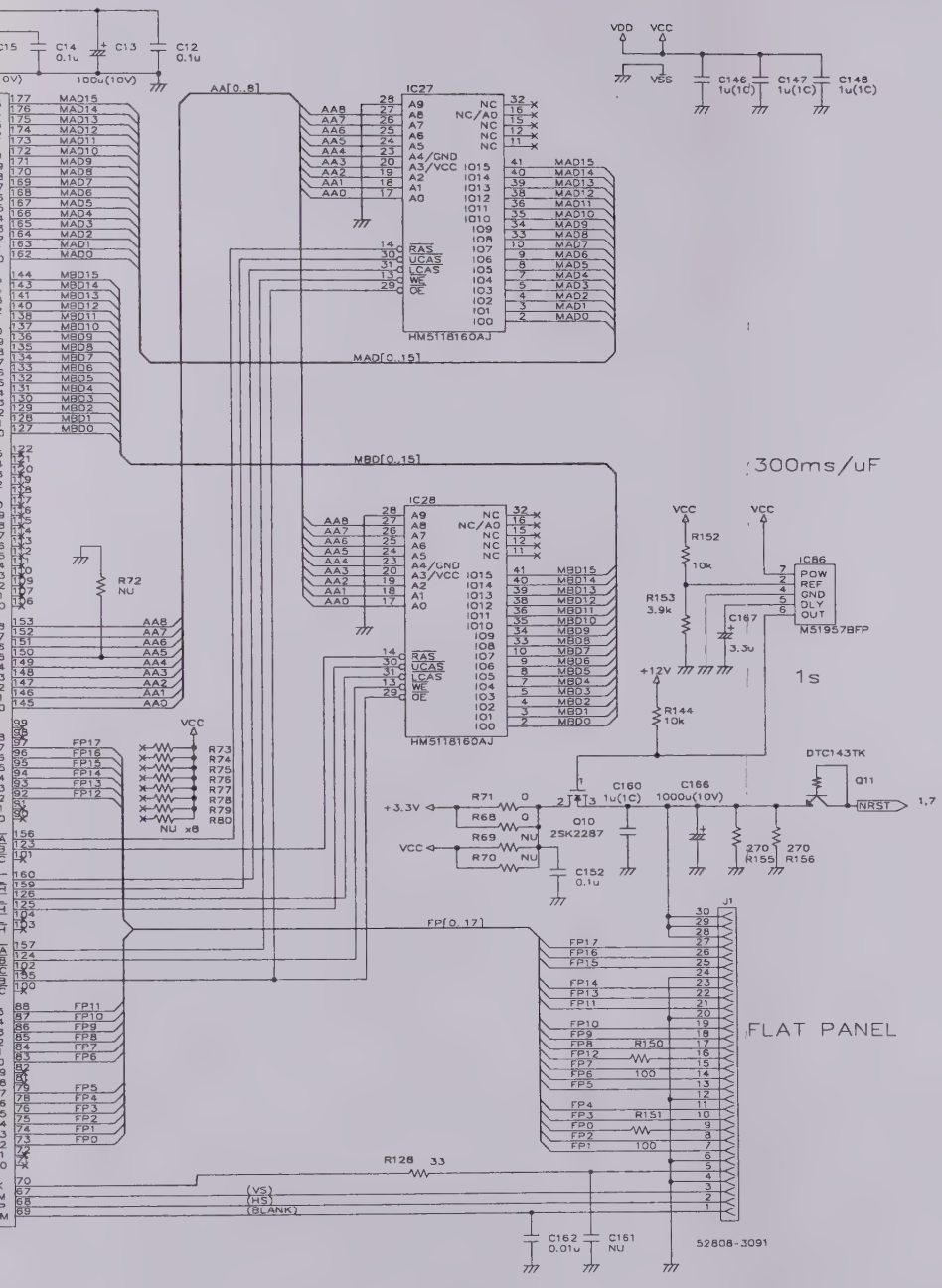
C14 0.1u
C13 100u(10V)
C12 0.1u
IC27
HM5118160AJ
IC28
HM5118160AJ
AA[0..8]
MAD[0..15]
MBD[0..15]
VDD
VCC
VSS
C146 1u(1C)
C147 1u(1C)
C148 1u(1C)
R72 NU
R73
R74
R75
R76
R77
R78
R79
R80
NU x8
R152 10k
R153 3.9k
IC86
M51957BFP
POW
REF
GND
DLY
OUT
C167 3.3u
+12V
R144 10k
300ms/uF
1s
DTC143TK
Q11
NRST
1,7
+3.3V
R71 0
R68 0
R69 NU
R70 NU
Q10 2SK2287
C160 1u(1C)
C166 1000u(10V)
C152 0.1u
270 R155
270 R156
FP[0..17]
J1
FLAT PANEL
R150 100
R151 100
R128 33
(VS)
(HS)
(BLANK)
C162 0.01u
C161 NU
52808-3091

ITROL (34)

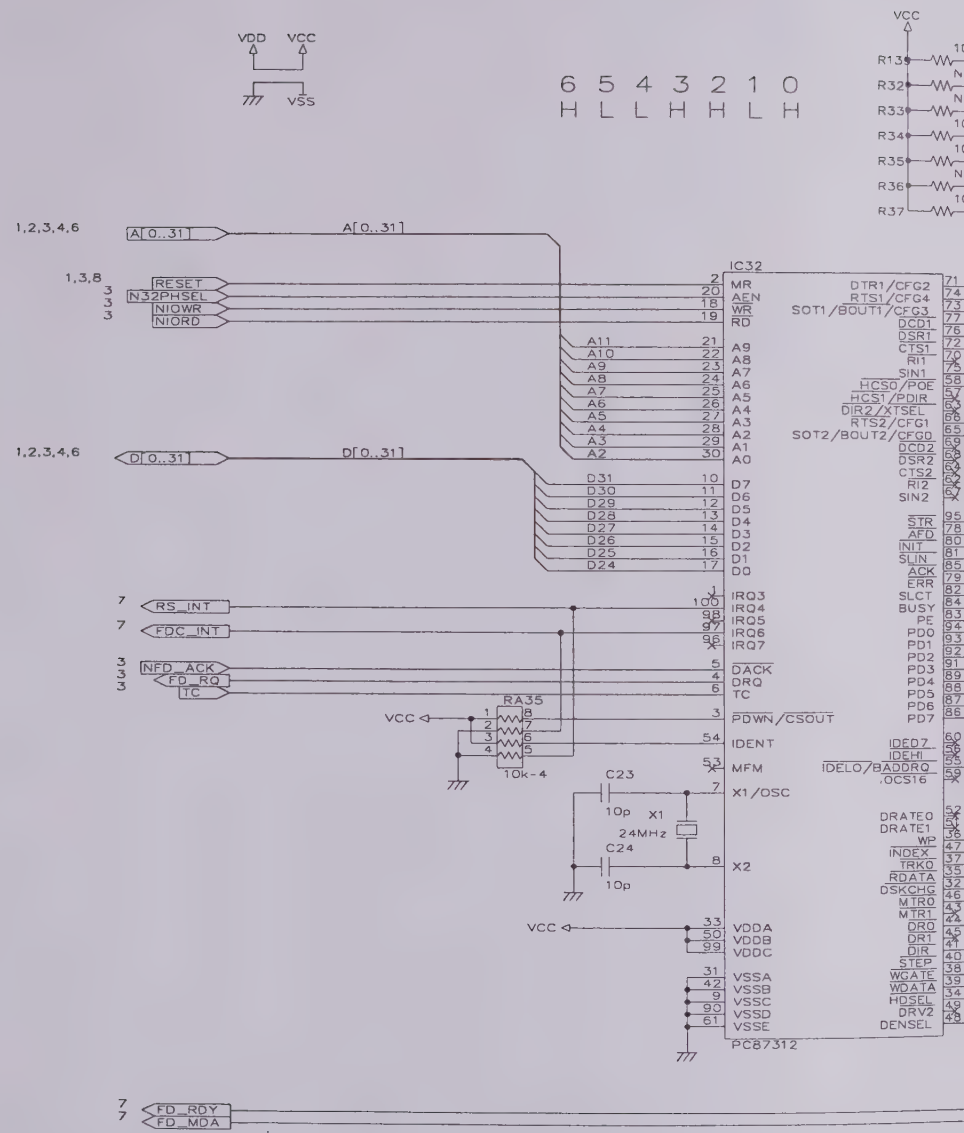
VDD VCC
VSS
6 5 4 3 2 1 0
H L L H H L H
VCC
R135
R32
R33
R34
R35
R36
R37
1,2,3,4,6
A[0..31]
A[0..31]
1,3,8
RESET
N32PHSEL
NIOWR
NIORD
IC32
MR
AEN
WR
RD
A11
A10
A9
A8
A7
A6
A5
A4
A3
A2
A1
A0
D7
D6
D5
D4
D3
D2
D1
D0
D31
D30
D29
D28
D27
D26
D25
D24
DTR1/CFG2
RTS1/CFG4
SOT1/BOUT1/CFG3
DCD1
DSR1
CTS1
RI1
SIN1
HCS0/POE
HCS1/PDIR
DIR2/XTSEL
RTS2/CFG1
SOT2/BOUT2/CFG0
DCD2
DSR2
CTS2
RI2
SIN2
STR
AFD
INIT
SLIN
ACK
ERR
SLCT
BUSY
PE
PD0
PD1
PD2
PD3
PD4
PD5
PD6
PD7
1,2,3,4,6
D[0..31]
D[0..31]
7
RS_INT
7
FDC_INT
IRQ3
IRQ4
IRQ5
IRQ6
IRQ7
3
NFD_ACK
3
FD_RQ
3
TC
DACK
DRQ
TC
VCC
RA35
10k-4
PDWN/CSOUT
IDENT
IDED7
IDEHI
MFM
IDELO/BADDRQ
.OCS16
C23
10p
X1
24MHz
C24
10p
X1/OSC
X2
DRATE0
DRATE1
WP
INDEX
TRK0
RDATA
DSKCHG
MTR0
MTR1
DR0
DRT
DIR
STEP
WGATE
WDATA
HDSEL
DRV2
DENSEL
VCC
VDDA
VDDB
VDDC
VSSA
VSSB
VSSC
VSSD
VSSE
PC87312
7
FD_RDY
7
FD_MDA

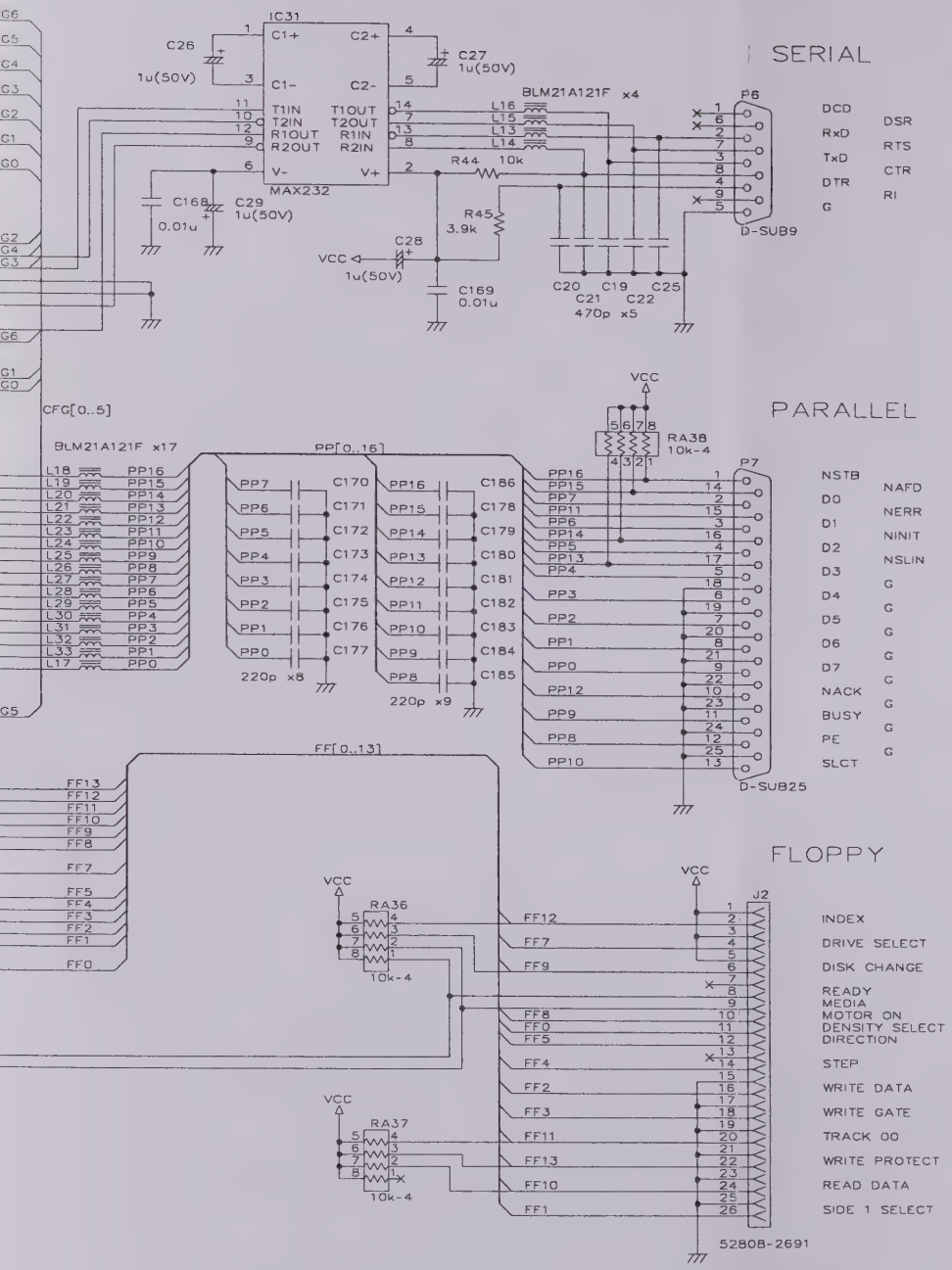
SERIAL
IC31
MAX232
C26
1u(50V)
C27
1u(50V)
C168
0.01u
C29
1u(50V)
C28
1u(50V)
C169
0.01u
R44 10k
R45
3.9k
BLM21A121F x4
P6
D-SUB9
DCD
RxD
TxD
DTR
G
DSR
RTS
CTR
RI
C20 C19 C25
C21 C22
470p x5
PARALLEL
CFG[0..5]
BLM21A121F x17
PP[0..16]
RA38
10k-4
P7
D-SUB25
220p x8
220p x9
NSTB
D0
D1
D2
D3
D4
D5
D6
D7
NACK
BUSY
PE
SLCT
NAFD
NERR
NINIT
NSLIN
FLOPPY
FF[0..13]
RA36
RA37
10k-4
J2
52808-2691
INDEX
DRIVE SELECT
DISK CHANGE
READY
MEDIA
MOTOR ON
DENSITY SELECT
DIRECTION
STEP
WRITE DATA
WRITE GATE
TRACK 00
WRITE PROTECT
READ DATA
SIDE 1 SELECT

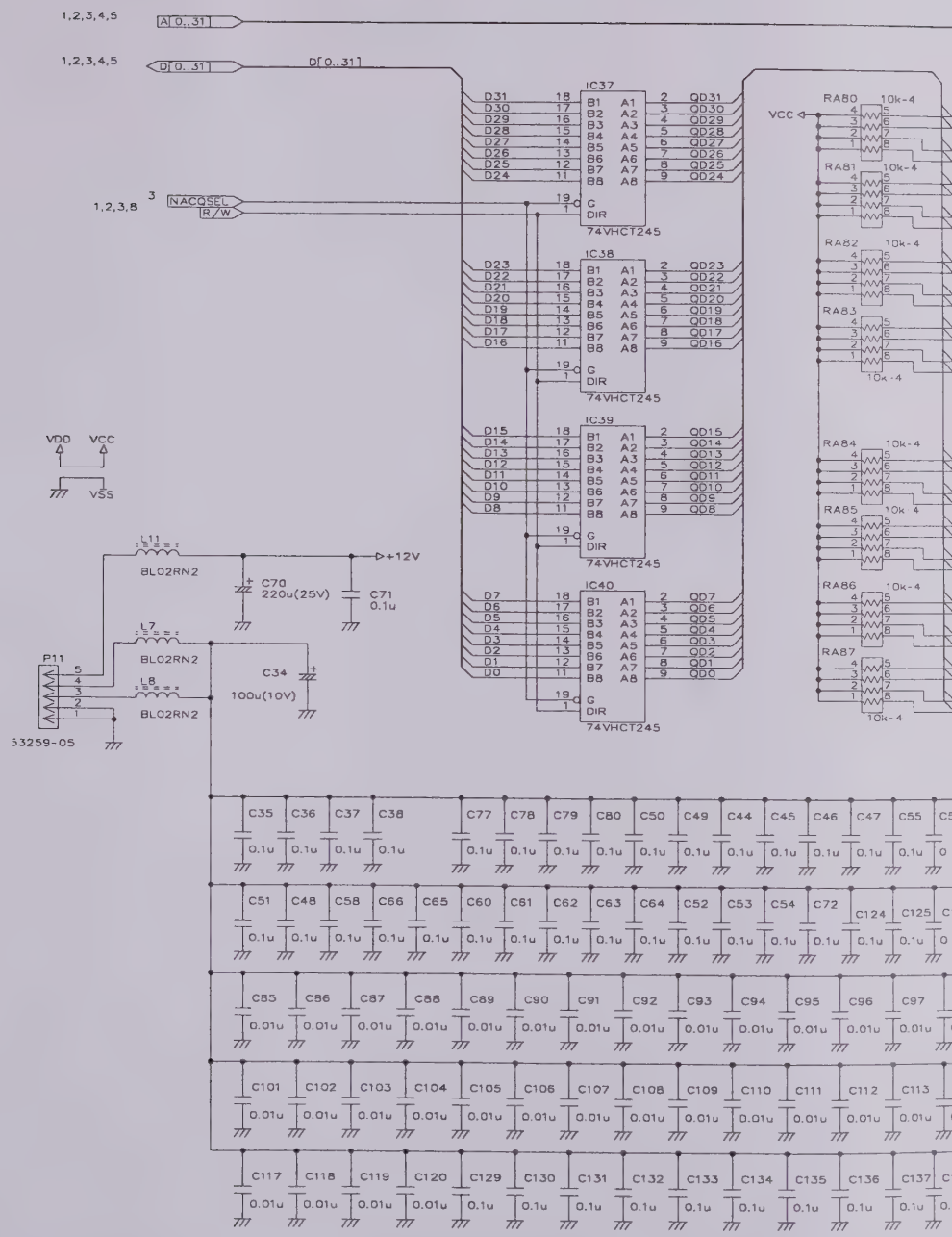
1,2,3,4,5
A[0..31]
1,2,3,4,5
D[0..31]
D[0..31]
1,2,3,8
3
NACQSEL
R/W
IC37
IC38
IC39
IC40
74VHCT245
RA80
RA81
RA82
RA83
RA84
RA85
RA86
RA87
10k-4
VCC
VDD
VCC
VSS
L11
BL02RN2
+12V
C70
220u(25V)
C71
0.1u
L7
BL02RN2
L8
BL02RN2
C34
100u(10V)
P11
53259-05

MAIN B

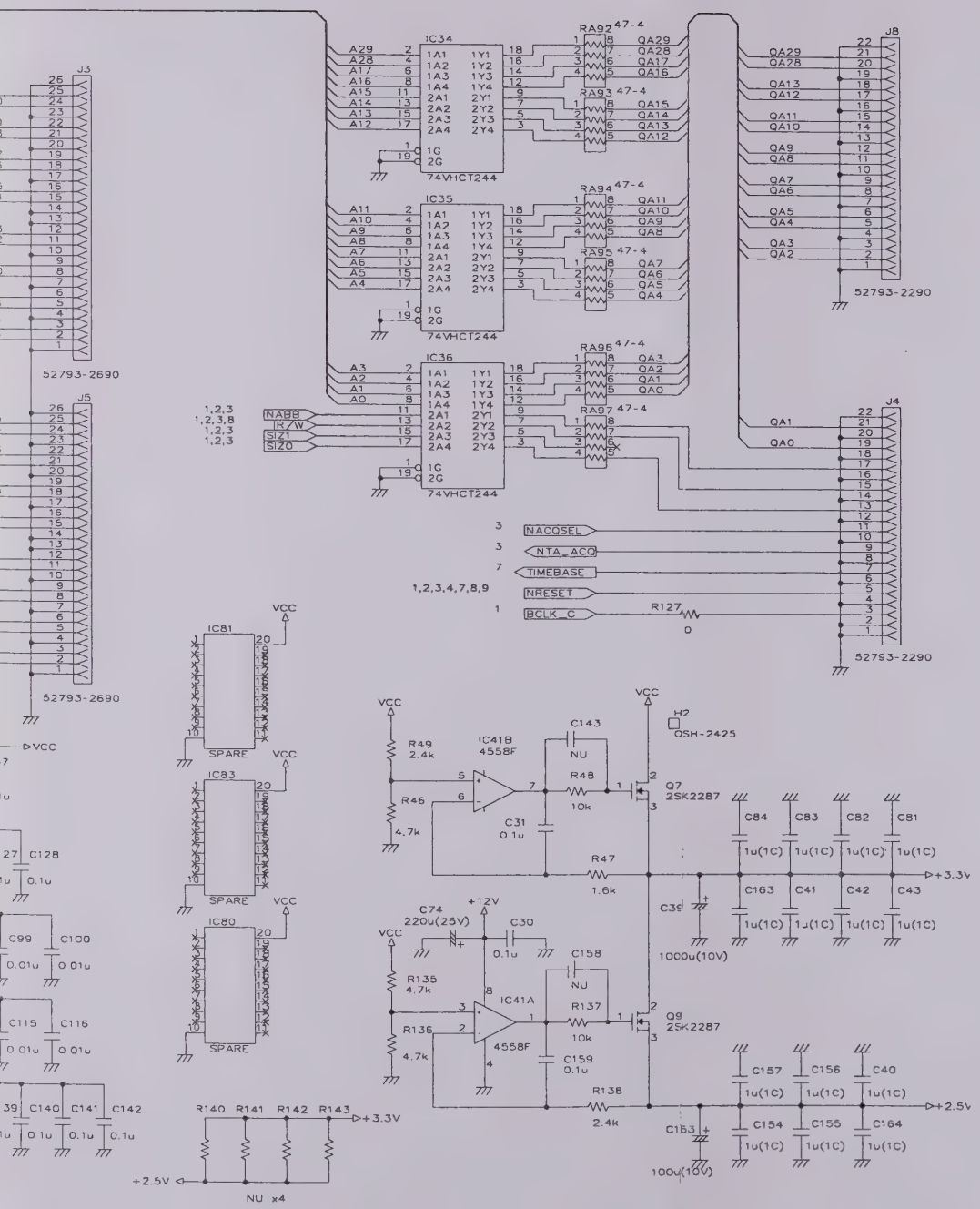
IC34
IC35
IC36
74VHCT244
RA92 47-4
RA93 47-4
RA94 47-4
RA95 47-4
RA96 47-4
RA97 47-4
A29
A28
A17
A16
A15
A14
A13
A12
A11
A10
A9
A8
A7
A6
A5
A4
A3
A2
A1
A0
QA29
QA28
QA17
QA16
QA15
QA14
QA13
QA12
QA11
QA10
QA9
QA8
QA7
QA6
QA5
QA4
QA3
QA2
QA1
QA0
J3
J4
J5
J8
52793-2690
52793-2290
NABB
R/W
SIZ1
SIZ0
1,2,3
1,2,3,8
1,2,3
1,2,3
NACQSEL
NTA_ACQ
TIMEBASE
NRESET
BCLK_C
1,2,3,4,7,8,9
R127
0
IC81
IC83
IC80
SPARE
VCC
IC41B
4558F
IC41A
R49 2.4k
R46 4.7k
R48 10k
R47 1.6k
R135 4.7k
R136 4.7k
R137 10k
R138 2.4k
C143
NU
C31 0.1u
C30 0.1u
C158
NU
C159 0.1u
C74 220u(25V)
C35 1000u(10V)
C153 100u(10V)
H2
OSH-2425
Q7 2SK2287
Q9 2SK2287
C84 C83 C82 C81
C163 C41 C42 C43
C157 C156 C40
C154 C155 C164
1u(1C)
+12V
+3.3V
+2.5V
R140 R141 R142 R143
NU x4
C128
C99 C100
C115 C116
C139 C140 C141 C142
0.01u
0.1u

RD I/F (36)

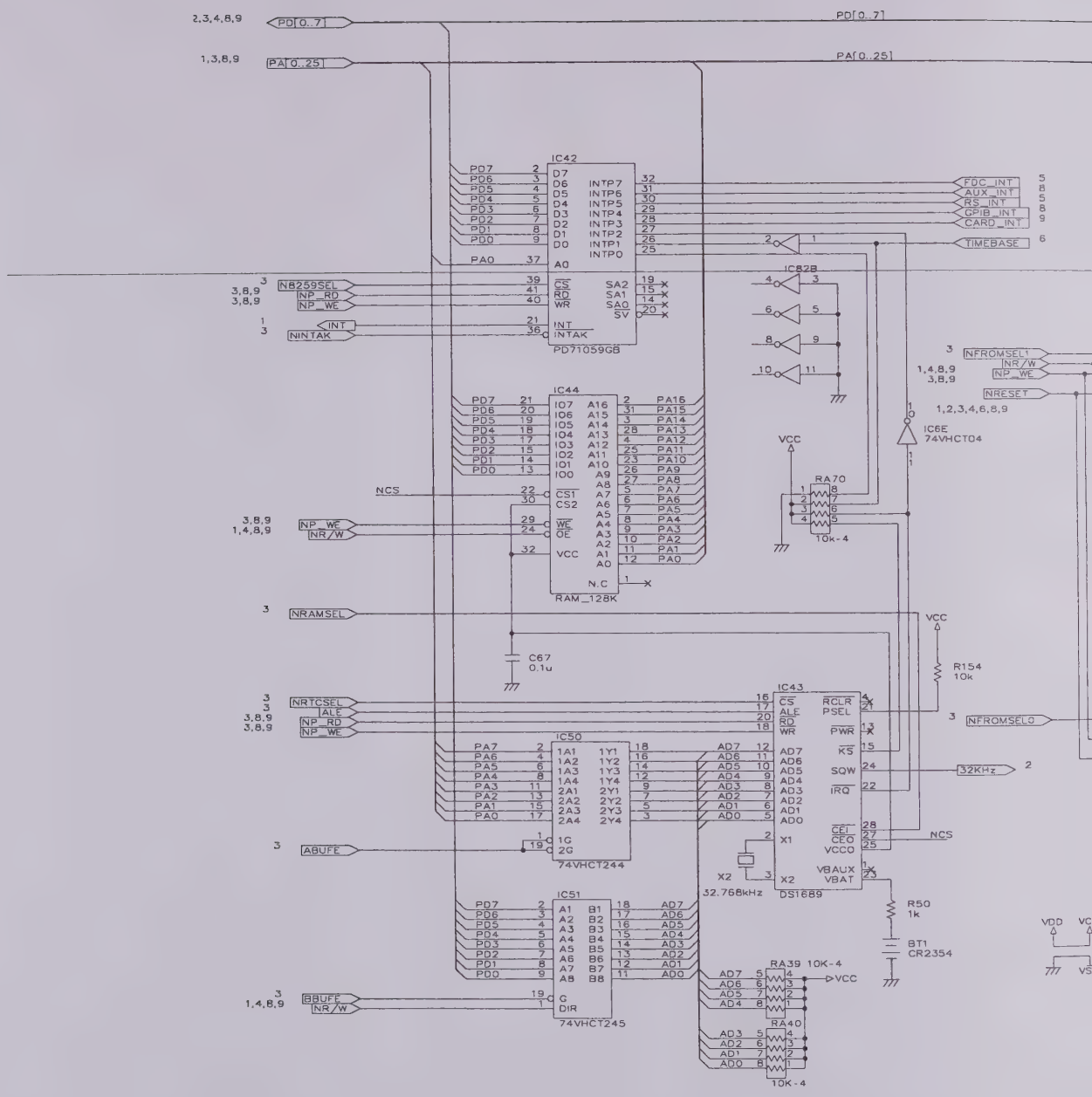
PD[0..7]
PA[0..25]
IC42
PD71059GB
IC44
RAM_128K
IC82B
IC6E
74VHCT04
RA70
10k-4
IC43
DS1689
32.768kHz
IC50
74VHCT244
IC51
74VHCT245
RA39 10K-4
RA40
10K-4
R154
10k
R50
1k
BT1
CR2354
C67
0.1u
FDC_INT
AUX_INT
RS_INT
GPIB_INT
CARD_INT
TIMEBASE
N8259SEL
NP_RD
NP_WE
INT
NINTAK
NCS
NRAMSEL
NRTCSEL
ALE
ABUFE
BBUFE
NR/W
NFROMSEL1
NFROMSEL0
NRESET
32KHz
VCC

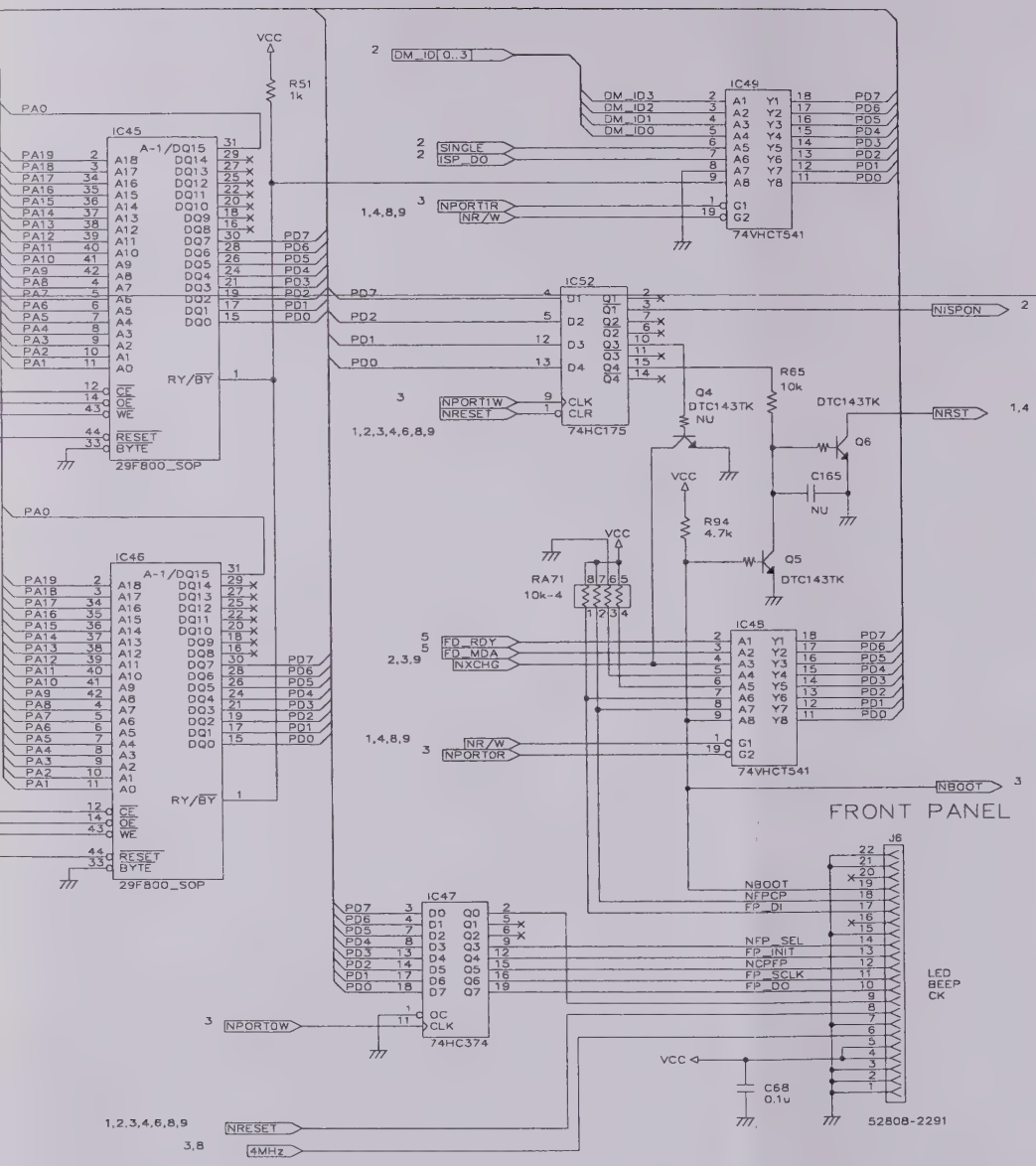
VCC
R51
1k
PA0
IC45
A-1/DQ15
29F800_SOP
RY/BY
RESET
BYTE
IC46
29F800_SOP
DM_ID[0..3]
DM_ID3
DM_ID2
DM_ID1
DM_ID0
IC49
74VHCT541
SINGLE
ISP_DO
NPORT1R
NR/W
1,4,8,9
IC52
74HC175
NPORT1W
NRESET
1,2,3,4,6,8,9
PD7
PD6
PD5
PD4
PD3
PD2
PD1
PD0
NISPON
R65
10k
Q4
DTC143TK
NU
DTC143TK
NRST
1,4
Q6
C165
NU
R94
4.7k
Q5
DTC143TK
RA71
10k-4
IC48
74VHCT541
FD_RDY
FD_MDA
NXCHG
2,3,9
NPORTOR
NBOOT
FRONT PANEL
J6
52808-2291
NFPCP
FP_DI
NFP_SEL
FP_INIT
NCPFP
FP_SCLK
FP_DO
LED
BEEP
CK
IC47
74HC374
NPORTOW
C68
0.1u
NRESET
4MHz
3,8

I/O (37)

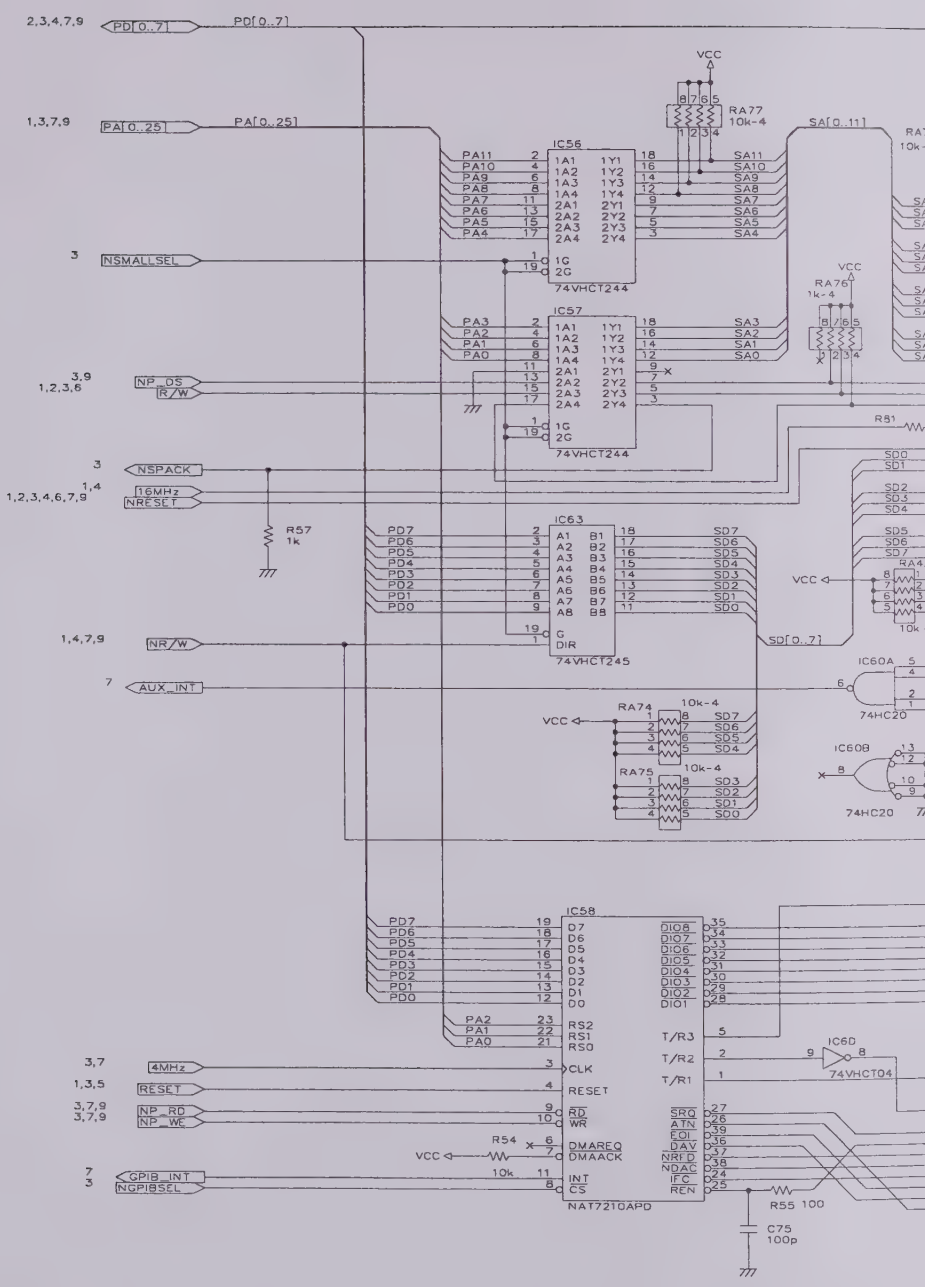
2,3,4,7,9
PD[0..7]
1,3,7,9
PA[0..25]
3
NSMALLSEL
3,9
1,2,3,6
NP_DS
R/W
3
NSPACK
1,4
1,2,3,4,6,7,9
16MHz
NRESET
R57
1k
1,4,7,9
NR/W
7
AUX_INT
VCC
RA77
10k-4
SA[0..11]
IC56
74VHCT244
IC57
74VHCT244
RA76
1k-4
R51
IC63
74VHCT245
SD[0..7]
RA74
10k-4
RA75
10k-4
IC60A
74HC20
IC60B
74HC20
IC58
NAT7210APD
3,7
4MHz
1,3,5
RESET
3,7,9
3,7,9
NP_RD
NP_WE
R54
10k
7
3
GPIB_INT
NGPIBSEL
T/R3
T/R2
T/R1
IC6D
74VHCT04
R55 100
C75
100p

EXTE

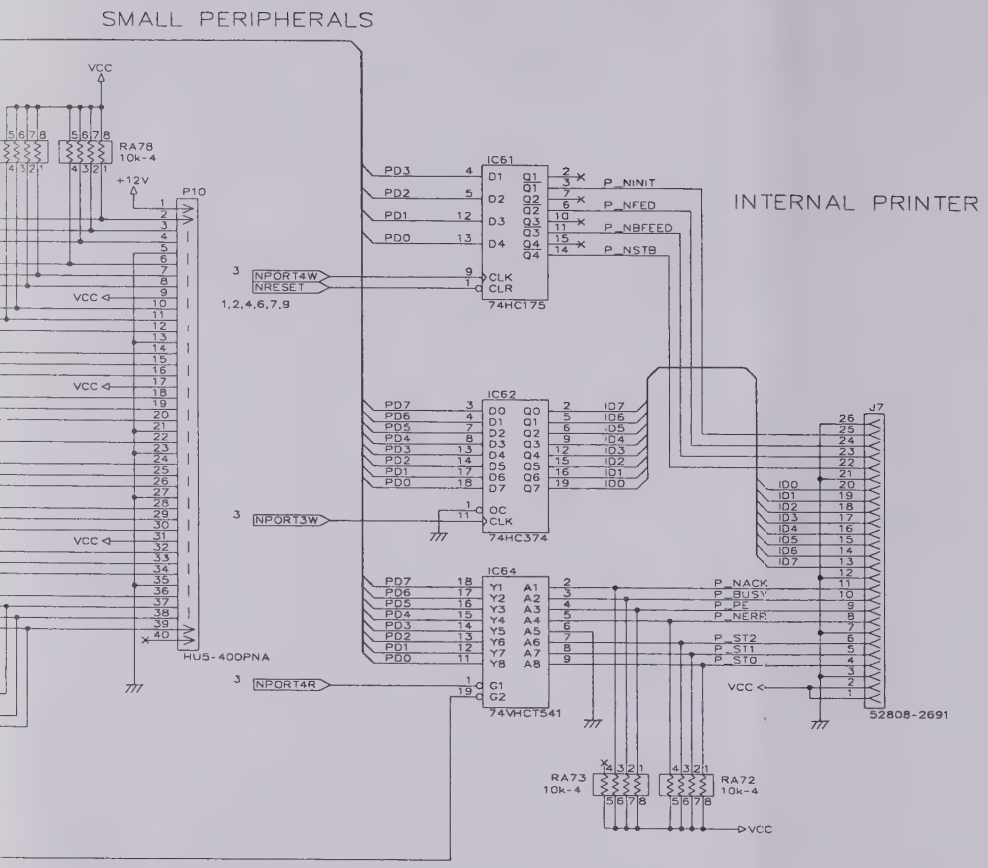
SMALL PERIPHERALS
INTERNAL PRINTER
VCC
RA78
10k-4
+12V
P10
HU5-400PNA
IC61
74HC175
PD3
PD2
PD1
PD0
P_NINIT
P_NFED
P_NBFEED
P_NSTB
NPORT4W
NRESET
1,2,4,6,7,9
IC62
74HC374
NPORT3W
IC64
74VHCT541
NPORT4R
P_NACK
P_BUSY
P_PE
P_NERR
P_ST2
P_ST1
P_ST0
J7
52808-2691
RA73
10k-4
RA72
10k-4

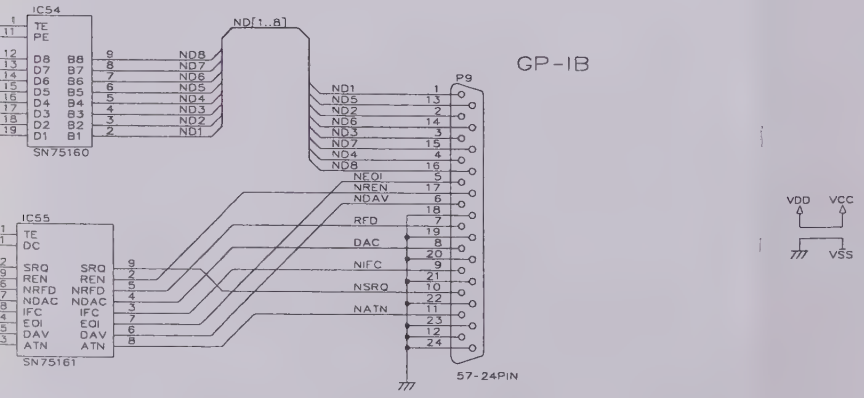
GP-IB
IC54
SN75160
ND[1..8]
P9
IC55
SN75161
SRQ
REN
NRFD
NDAC
IFC
EOI
DAV
ATN
NEOI
NREN
NDAV
RFD
DAC
NIFC
NSRQ
NATN
57-24PIN
VDD
VCC
VSS

NAL I/F (38)

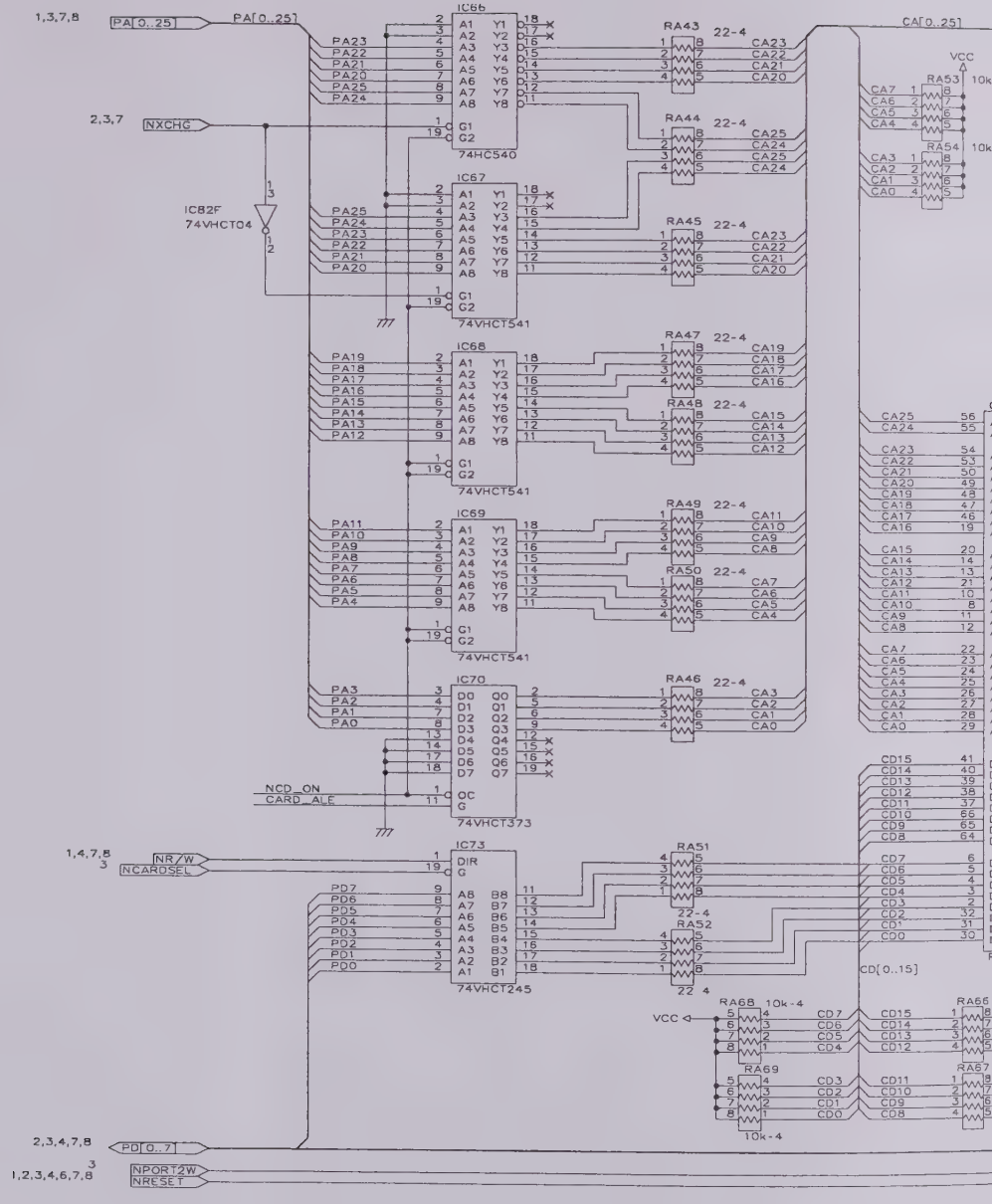
1,3,7,8
PA[0..25]
IC66
74HC540
2,3,7
NXCHG
IC82F
74VHCT04
IC67
74VHCT541
IC68
74VHCT541
IC69
74VHCT541
IC70
74VHCT373
NCD_ON
CARD_ALE
1,4,7,8
NR/W
NCARDSEL
IC73
74VHCT245
RA43
RA44
RA45
RA46
RA47
RA48
RA49
RA50
RA51
RA52
22-4
CA[0..25]
VCC
RA53
RA54
10k
CD[0..15]
RA68
RA69
10k-4
RA66
RA67
2,3,4,7,8
PD[0..7]
1,2,3,4,6,7,8
NPORT2W
NRESET

PCI

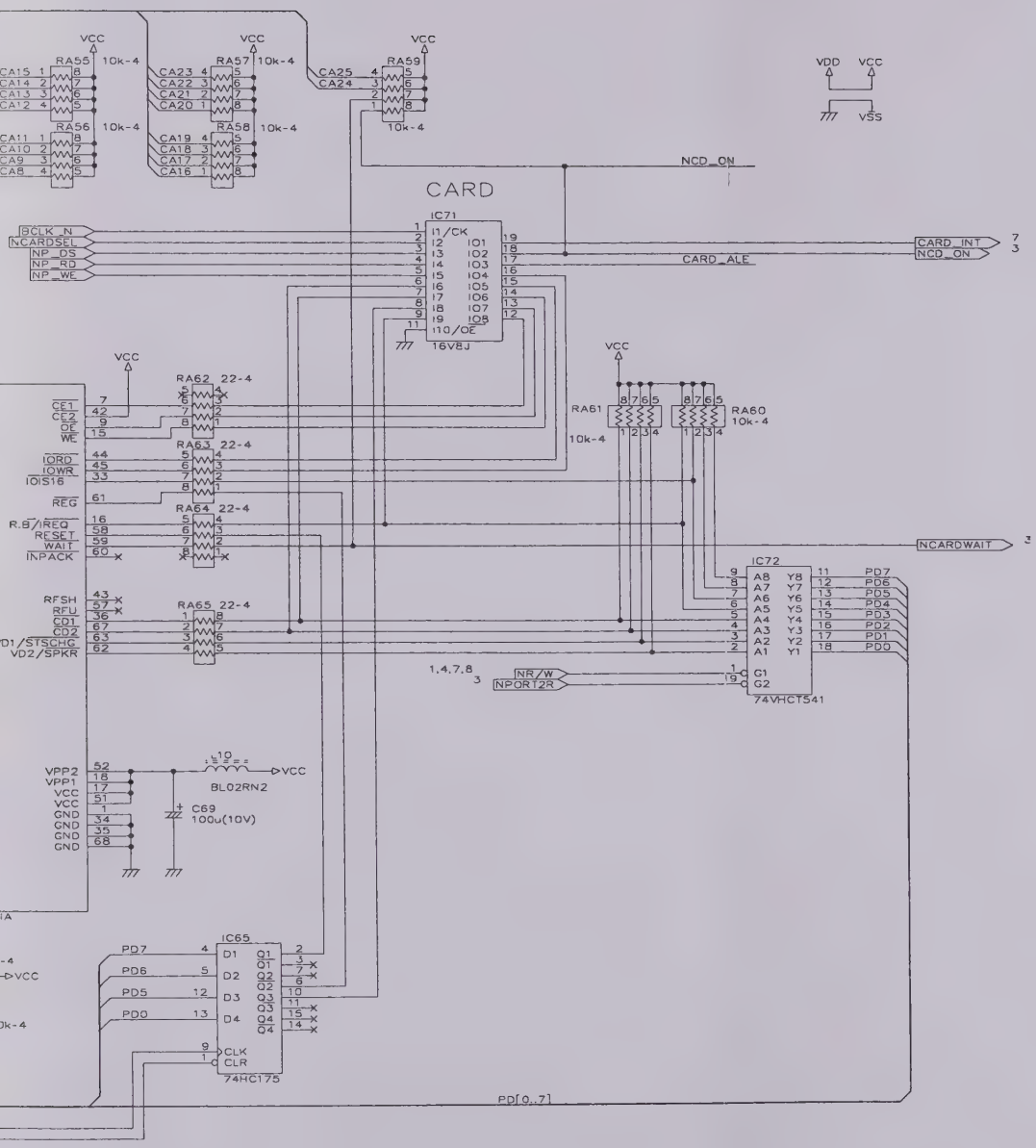
CARD
IC71
16V8J
IC72
74VHCT541
IC65
74HC175
RA55 10k-4
RA56 10k-4
RA57 10k-4
RA58 10k-4
RA59 10k-4
RA60 10k-4
RA61 10k-4
RA62 22-4
RA63 22-4
RA64 22-4
RA65 22-4
BL02RN2
C69 100u(10V)
VCC
VDD
VSS
NCD_ON
CARD_ALE
CARD_INT
BCLK_N
NCARDSEL
NP_DS
NP_RD
NP_WE
CE1
CE2
OE
WE
IORD
IOWR
IOIS16
REG
R.B/REQ
RESET
WAIT
INPACK
RFSH
RFU
CD1
CD2
VD1/STSCHG
VD2/SPKR
VPP2
VPP1
GND
NR/W
NPORT2R
NCARDWAIT
PD7
PD6
PD5
PD4
PD3
PD2
PD1
PD0
PD[0..7]

CIA (39)

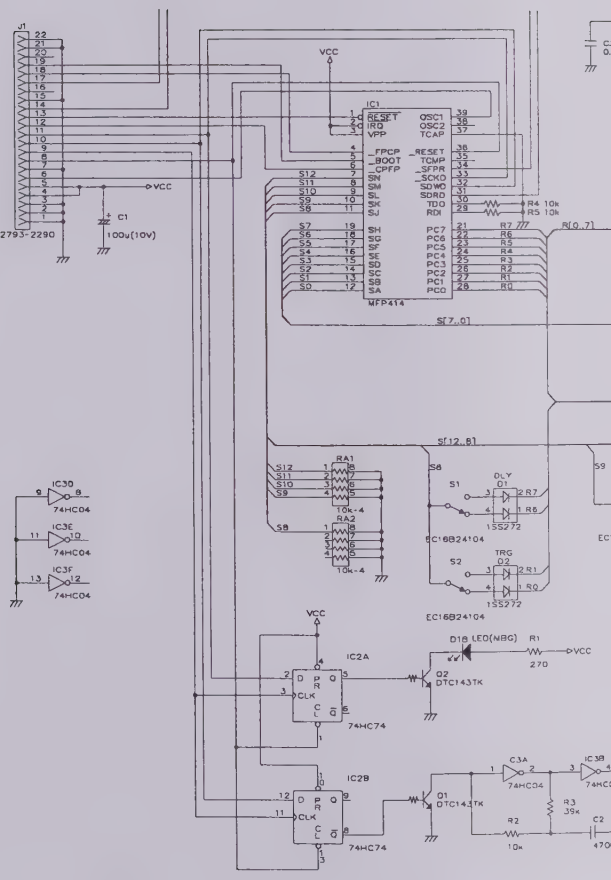
J1
52793-2290
C1
100u(10V)
VCC
IC1
MFP414
R4 10k
R5 10k
R[0..7]
S[7..0]
S[12..8]
RA1
RA2
10k-4
S8
S1
S2
DLY
TRG
1SS272
EC16B24104
IC3D
IC3E
IC3F
74HC04
IC2A
IC2B
74HC74
D18 LED(MBG)
R1
270
Q2
DTC143TK
Q1
C3A
IC3B
R3
39k
R2
10k
C2
470

PANEL

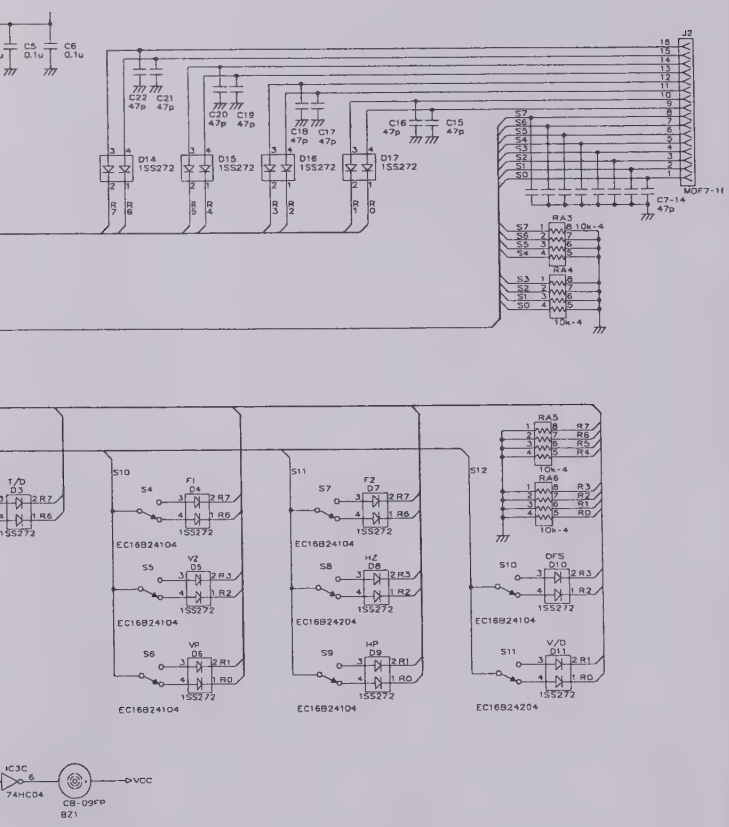

C5 0.1u
C6 0.1u
C22 47p
C21 47p
C20 47p
C19 47p
C18 47p
C17 47p
C16 47p
C15 47p
D14 1SS272
D15 1SS272
D16 1SS272
D17 1SS272
J2
MDF7-16
C7-14 47p
RA3 10k-4
RA4 10k-4
RA5 10k-4
RA6 10k-4
S10
S11
S12
EC16B24104
EC16B24204
IC3C
74HC04
CB-09FP
BZ1
VCC

ARD (40)

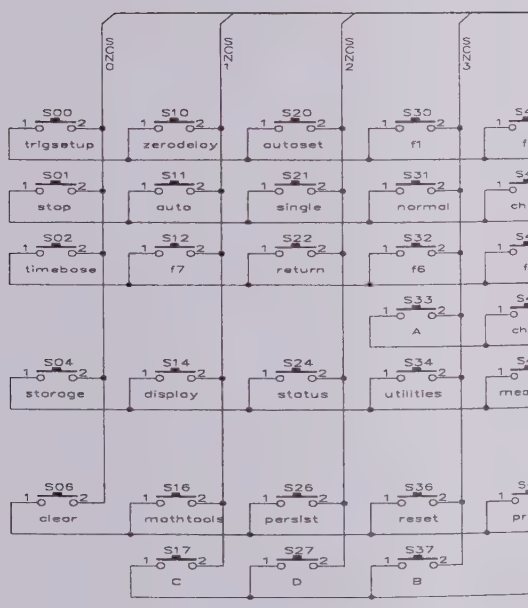
KEY0
KEY1
KEY2
KEY3
KEY4
S00
trigsetup
S10
zerodelay
S20
autoset
S30
f1
S01
stop
S11
auto
S21
single
S31
normal
S02
timebase
S12
f7
S22
return
S32
f6
S33
A
S04
storage
S14
display
S24
status
S34
utilities
S06
clear
S16
mathtools
S26
persist
S36
reset
S17
C
S27
D
S37
B

KEY

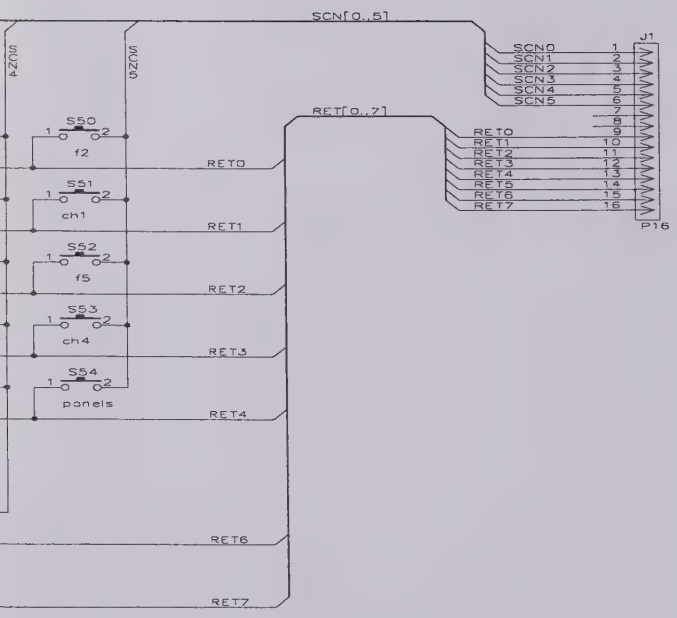
SCN[0..5]
SCN5
J1
SCN0 1
SCN1 2
SCN2 3
SCN3 4
SCN4 5
SCN5 6
7
8
RET[0..7]
RET0 9
RET1 10
RET2 11
RET3 12
RET4 13
RET5 14
RET6 15
RET7 16
P16
S50
f2
RET0
S51
ch1
RET1
S52
f5
RET2
S53
ch4
RET3
S54
panels
RET4
RET6
RET7

ARD (41)

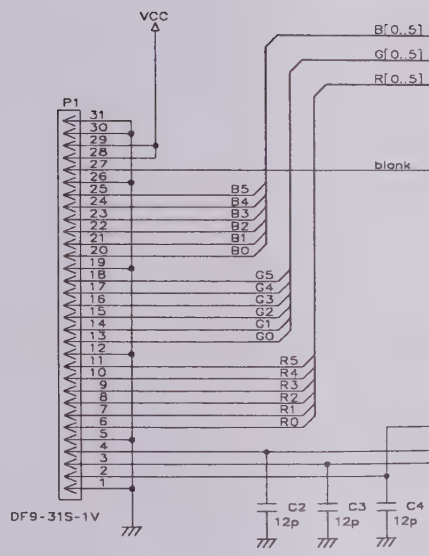
VCC
B[0..5]
G[0..5]
R[0..5]
P1
31
30
29
28
27
26
25
24
23
22
21
20
19
18
17
16
15
14
13
12
11
10
9
8
7
6
5
4
3
2
1
blank
B5
B4
B3
B2
B1
B0
G5
G4
G3
G2
G1
G0
R5
R4
R3
R2
R1
R0
DF9-31S-1V
C2
12p
C3
12p
C4
12p

LCD CON

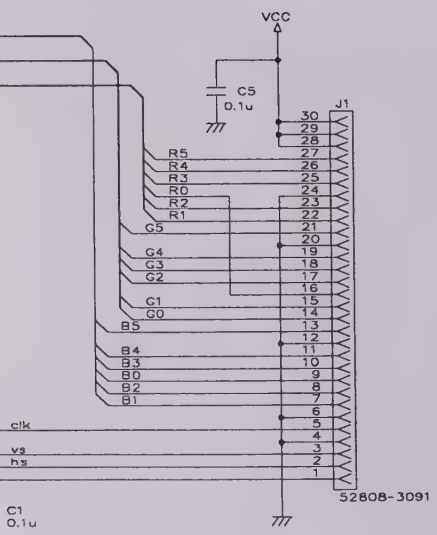
VCC
C5
0.1u
J1
30
29
28
27
R5
R4
R3
R0
R2
R1
G5
G4
G3
G2
G1
G0
B5
B4
B3
B0
B2
B1
clk
v3
hs
26
25
24
23
22
21
20
19
18
17
16
15
14
13
12
11
10
9
8
7
6
5
4
3
2
1
52808-3091
C1
0.1u

ECTOR (42)

CPU6036
IWATSU
MADE IN JAPAN
IC45 29F800
IC46 29F800
IC78 VHCT541
IC79 VHCT541
IC77 VHCT541
IC74 HC4051
IC85 HC175
IC52 HC175
IC39 VHCT245
IC47 HC374
IC40 VHCT245
IC48 VHCT541
IC49 VHCT541
IC9 F157
IC1 803E
IC37 VHCT245
IC84 HC374
IC38 VHCT245
IC10 F157
IC34 VHCT244
IC35 VHCT244
IC11 F157
IC36 VHCT244
IC14 CA8
IC20 VHCT373
IC18 PD71071GC
IC16 MC68150
IC15
IC21 F74
IC19 ACK32
IC25 HC393
IC78 RW32
IC17 DEC32
IC28 85545
IC22 HM5118160AJ
IC27 HM5118160AJ
IC31 MAX232
EPM7032S
P67512
EXO-3 X1
P2
P8
P7
P4
J1
J2
J4
J5
J6
J8
RA36
RA37
RA31 RA12 RA11
RA30 RA14
RA15
RA33 RA34
RA4 RA9 RA10 RA16 RA13
RA28
RA29
RA23
RA38
RA35
RA81
RA80
RA84
RA85
RA86
RA87
RA88
RA89
RA90
RA91
RA92
RA93
RA94
RA95
RA96
RA97
RA98
RA99
RA100
RA101
RA102
RA103
RA104
RA105
RA106
RA107
RA108
RA109
RA110
RA111
RA112
RA113
RA114
RA115
RA116
RA117
RA118
RA119
RA120
RA121
RA122
RA123
RA124
RA125
RA126
RA127
RA128
RA129
RA130
RA131
RA132
RA133
RA134
RA135
RA136
RA137
RA138
RA139
RA140
RA141
RA142
RA143
RA144
RA145
RA146
RA147
RA148
RA149
RA150
RA151
RA152
RA153
RA154
RA155
RA156
RA157
RA158
RA159
RA160
RA161
RA162
RA163
RA164
RA165
RA166
RA167
RA168
RA169
RA170
RA171
RA172
RA173
RA174
RA175
RA176
RA177
RA178
RA179
RA180
RA181
RA182
RA183
RA184
RA185
RA186
RA187
RA188
RA189
RA190
RA191
RA192
RA193
RA194
RA195
RA196
RA197
RA198
RA199
RA200
RA201
RA202
RA203
RA204
RA205
RA206
RA207
RA208
RA209
RA210
RA211
RA212
RA213
RA214
RA215
RA216
RA217
RA218
RA219
RA220
RA221
RA222
RA223
RA224
RA225
RA226
RA227
RA228
RA229
RA230
RA231
RA232
RA233
RA234
RA235
RA236
RA237
RA238
RA239
RA240
RA241
RA242
RA243
RA244
RA245
RA246
RA247
RA248
RA249
RA250
RA251
RA252
RA253
RA254
RA255
RA256
RA257
RA258
RA259
RA260
RA261
RA262
RA263
RA264
RA265
RA266
RA267
RA268
RA269
RA270
RA271
RA272
RA273
RA274
RA275
RA276
RA277
RA278
RA279
RA280
RA281
RA282
RA283
RA284
RA285
RA286
RA287
RA288
RA289
RA290
RA291
RA292
RA293
RA294
RA295
RA296
RA297
RA298
RA299
RA300
RA301
RA302
RA303
RA304
RA305
RA306
RA307
RA308
RA309
RA310
RA311
RA312
RA313
RA314
RA315
RA316
RA317
RA318
RA319
RA320
RA321
RA322
RA323
RA324
RA325
RA326
RA327
RA328
RA329
RA330
RA331
RA332
RA333
RA334
RA335
RA336
RA337
RA338
RA339
RA340
RA341
RA342
RA343
RA344
RA345
RA346
RA347
RA348
RA349
RA350
RA351
RA352
RA353
RA354
RA355
RA356
RA357
RA358
RA359
RA360
RA361
RA362
RA363
RA364
RA365
RA366
RA367
RA368
RA369
RA370
RA371
RA372
RA373
RA374
RA375
RA376
RA377
RA378
RA379
RA380
RA381
RA382
RA383
RA384
RA385
RA386
RA387
RA388
RA389
RA390
RA391
RA392
RA393
RA394
RA395
RA396
RA397
RA398
RA399
RA400
RA401
RA402
RA403
RA404
RA405
RA406
RA407
RA408
RA409
RA410
RA411
RA412
RA413
RA414
RA415
RA416
RA417
RA418
RA419
RA420
RA421
RA422
RA423
RA424
RA425
RA426
RA427
RA428
RA429
RA430
RA431
RA432
RA433
RA434
RA435
RA436
RA437
RA438
RA439
RA440
RA441
RA442
RA443
RA444
RA445
RA446
RA447
RA448
RA449
RA450
RA451
RA452
RA453
RA454
RA455
RA456
RA457
RA458
RA459
RA460
RA461
RA462
RA463
RA464
RA465
RA466
RA467
RA468
RA469
RA470
RA471
RA472
RA473
RA474
RA475
RA476
RA477
RA478
RA479
RA480
RA481
RA482
RA483
RA484
RA485
RA486
RA487
RA488
RA489
RA490
RA491
RA492
RA493
RA494
RA495
RA496
RA497
RA498
RA499
RA500
RA501
RA502
RA503
RA504
RA505
RA506
RA507
RA508
RA509
RA510
RA511
RA512
RA513
RA514
RA515
RA516
RA517
RA518
RA519
RA520
RA521
RA522
RA523
RA524
RA525
RA526
RA527
RA528
RA529
RA530
RA531
RA532
RA533
RA534
RA535
RA536
RA537
RA538
RA539
RA540
RA541
RA542
RA543
RA544
RA545
RA546
RA547
RA548
RA549
RA550
RA551
RA552
RA553
RA554
RA555
RA556
RA557
RA558
RA559
RA560
RA561
RA562
RA563
RA564
RA565
RA566
RA567
RA568
RA569
RA570
RA571
RA572
RA573
RA574
RA575
RA576
RA577
RA578
RA579
RA580
RA581
RA582
RA583
RA584
RA585
RA586
RA587
RA588
RA589
RA590
RA591
RA592
RA593
RA594
RA595
RA596
RA597
RA598
RA599
RA600
RA601
RA602
RA603
RA604
RA605
RA606
RA607
RA608
RA609
RA610
RA611
RA612
RA613
RA614
RA615
RA616
RA617
RA618
RA619
RA620
RA621
RA622
RA623
RA624
RA625
RA626
RA627
RA628
RA629
RA630
RA631
RA632
RA633
RA634
RA635
RA636
RA637
RA638
RA639
RA640
RA641
RA642
RA643
RA644
RA645
RA646
RA647
RA648
RA649
RA650
RA651
RA652
RA653
RA654
RA655
RA656
RA657
RA658
RA659
RA660
RA661
RA662
RA663
RA664
RA665
RA666
RA667
RA668
RA669
RA670
RA671
RA672
RA673
RA674
RA675
RA676
RA677
RA678
RA679
RA680
RA681
RA682
RA683
RA684
RA685
RA686
RA687
RA688
RA689
RA690
RA691
RA692
RA693
RA694
RA695
RA696
RA697
RA698
RA699
RA700
RA701
RA702
RA703
RA704
RA705
RA706
RA707
RA708
RA709
RA710
RA711
RA712
RA713
RA714
RA715
RA716
RA717
RA718
RA719
RA720
RA721
RA722
RA723
RA724
RA725
RA726
RA727
RA728
RA729
RA730
RA731
RA732
RA733
RA734
RA735
RA736
RA737
RA738
RA739
RA740
RA741
RA742
RA743
RA744
RA745
RA746
RA747
RA748
RA749
RA750
RA751
RA752
RA753
RA754
RA755
RA756
RA757
RA758
RA759
RA760
RA761
RA762
RA763
RA764
RA765
RA766
RA767
RA768
RA769
RA770
RA771
RA772
RA773
RA774
RA775
RA776
RA777
RA778
RA779
RA780
RA781
RA782
RA783
RA784
RA785
RA786
RA787
RA788
RA789
RA790
RA791
RA792
RA793
RA794
RA795
RA796
RA797
RA798
RA799
RA800
RA801
RA802
RA803
RA804
RA805
RA806
RA807
RA808
RA809
RA810
RA811
RA812
RA813
RA814
RA815
RA816
RA817
RA818
RA819
RA820
RA821
RA822
RA823
RA824
RA825
RA826
RA827
RA828
RA829
RA830
RA831
RA832
RA833
RA834
RA835
RA836
RA837
RA838
RA839
RA840
RA841
RA842
RA843
RA844
RA845
RA846
RA847
RA848
RA849
RA850
RA851
RA852
RA853
RA854
RA855
RA856
RA857
RA858
RA859
RA860
RA861
RA862
RA863
RA864
RA865
RA866
RA867
RA868
RA869
RA870
RA871
RA872
RA873
RA874
RA875
RA876
RA877
RA878
RA879
RA880
RA881
RA882
RA883
RA884
RA885
RA886
RA887
RA888
RA889
RA890
RA891
RA892
RA893
RA894
RA895
RA896
RA897
RA898
RA899
RA900
RA901
RA902
RA903
RA904
RA905
RA906
RA907
RA908
RA909
RA910
RA911
RA912
RA913
RA914
RA915
RA916
RA917
RA918
RA919
RA920
RA921
RA922
RA923
RA924
RA925
RA926
RA927
RA928
RA929
RA930
RA931
RA932
RA933
RA934
RA935
RA936
RA937
RA938
RA939
RA940
RA941
RA942
RA943
RA944
RA945
RA946
RA947
RA948
RA949
RA950
RA951
RA952
RA953
RA954
RA955
RA956
RA957
RA958
RA959
RA960
RA961
RA962
RA963
RA964
RA965
RA966
RA967
RA968
RA969
RA970
RA971
RA972
RA973
RA974
RA975
RA976
RA977
RA978
RA979
RA980
RA981
RA982
RA983
RA984
RA985
RA986
RA987
RA988
RA989
RA990
RA991
RA992
RA993
RA994
RA995
RA996
RA997
RA998
RA999
RA1000

CPU B

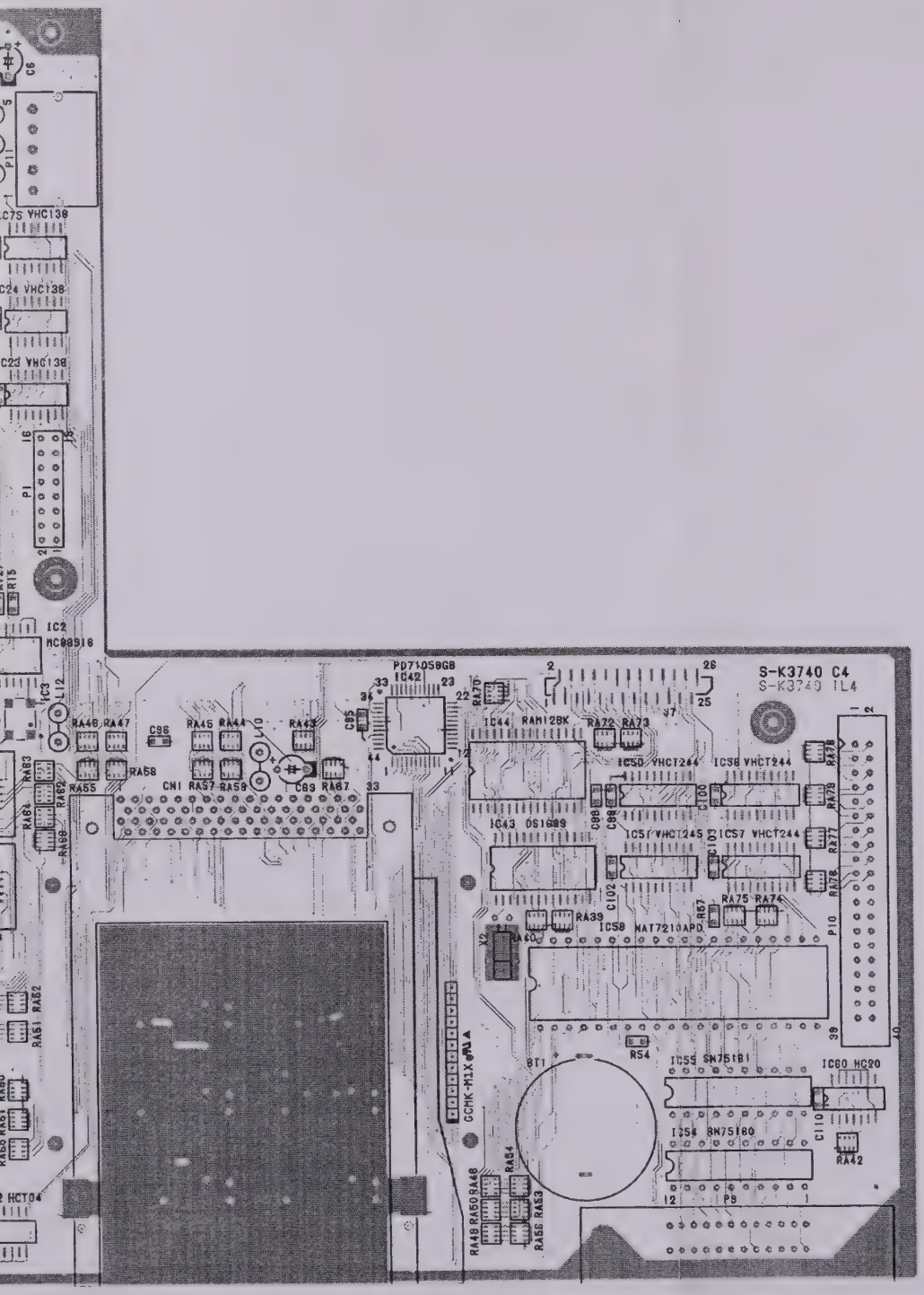
S-K3740 C4
S-K3740 IL4
PD71050GB
IC42
IC44 RAM128K
IC50 VHCT244
IC58 VHCT244
IC43 OS1699
IC51 VHCT245
IC57 VHCT244
IC58 NAT7210APD
IC55 SN75181
IC60 HC20
IC54 SN75180
GCMK-M1X

ARD (1/2)

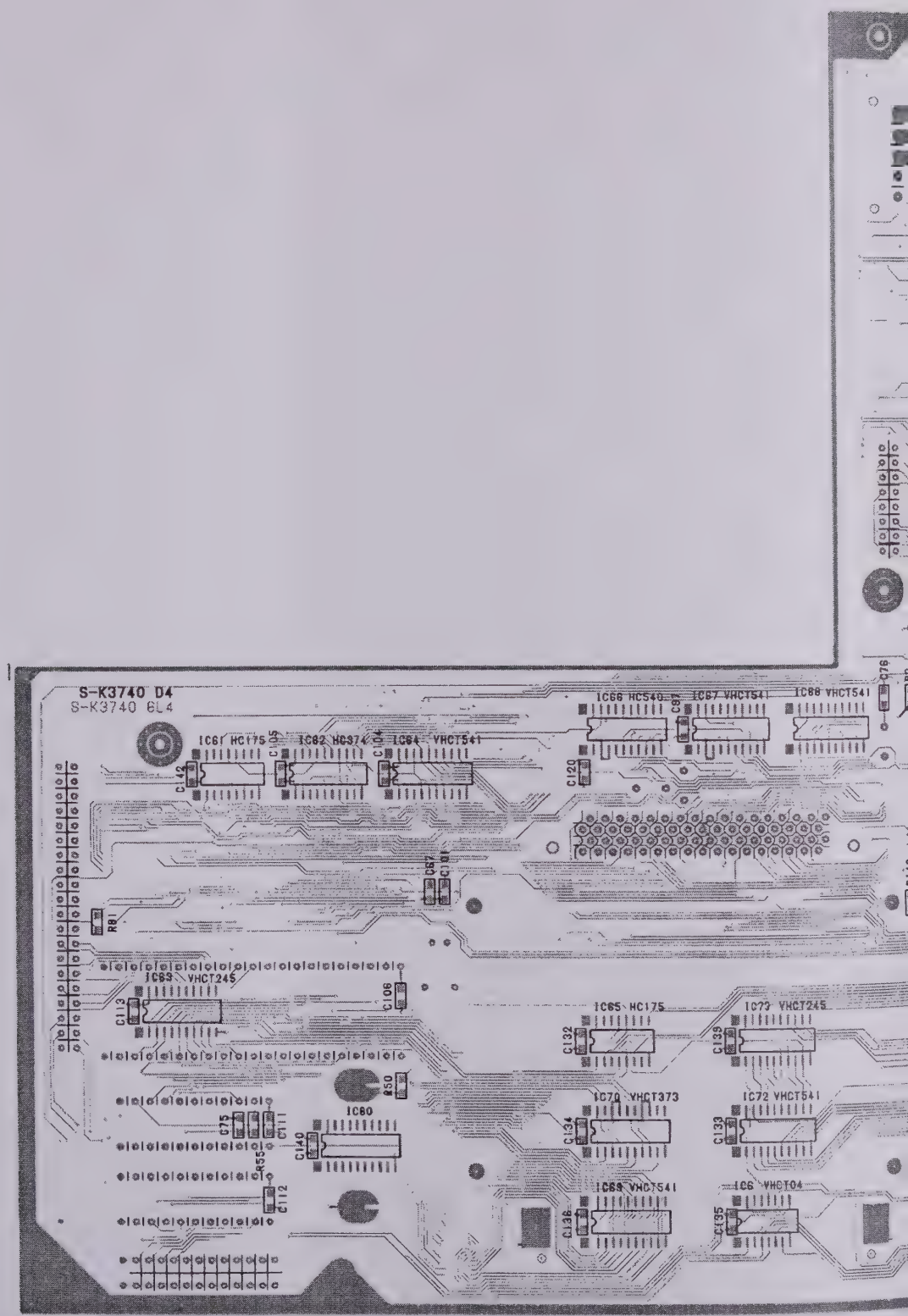
S-K3740 D4
S-K3740 6L4
IC61 HC175
IC62 HC374
IC64 VHCT541
IC66 HC540
IC67 VHCT541
IC68 VHCT541
IC63 VHCT245
IC65 HC175
IC73 VHCT245
IC70 VHCT373
IC72 VHCT541
IC69 VHCT541
IC6 VHCT04
IC80
R81
R50
R55
C75
C111
C112
C113
C106
C120
C132
C133
C134
C135
C136
C139
C140
C142
C105
C104
C67
C101
C76

CPU

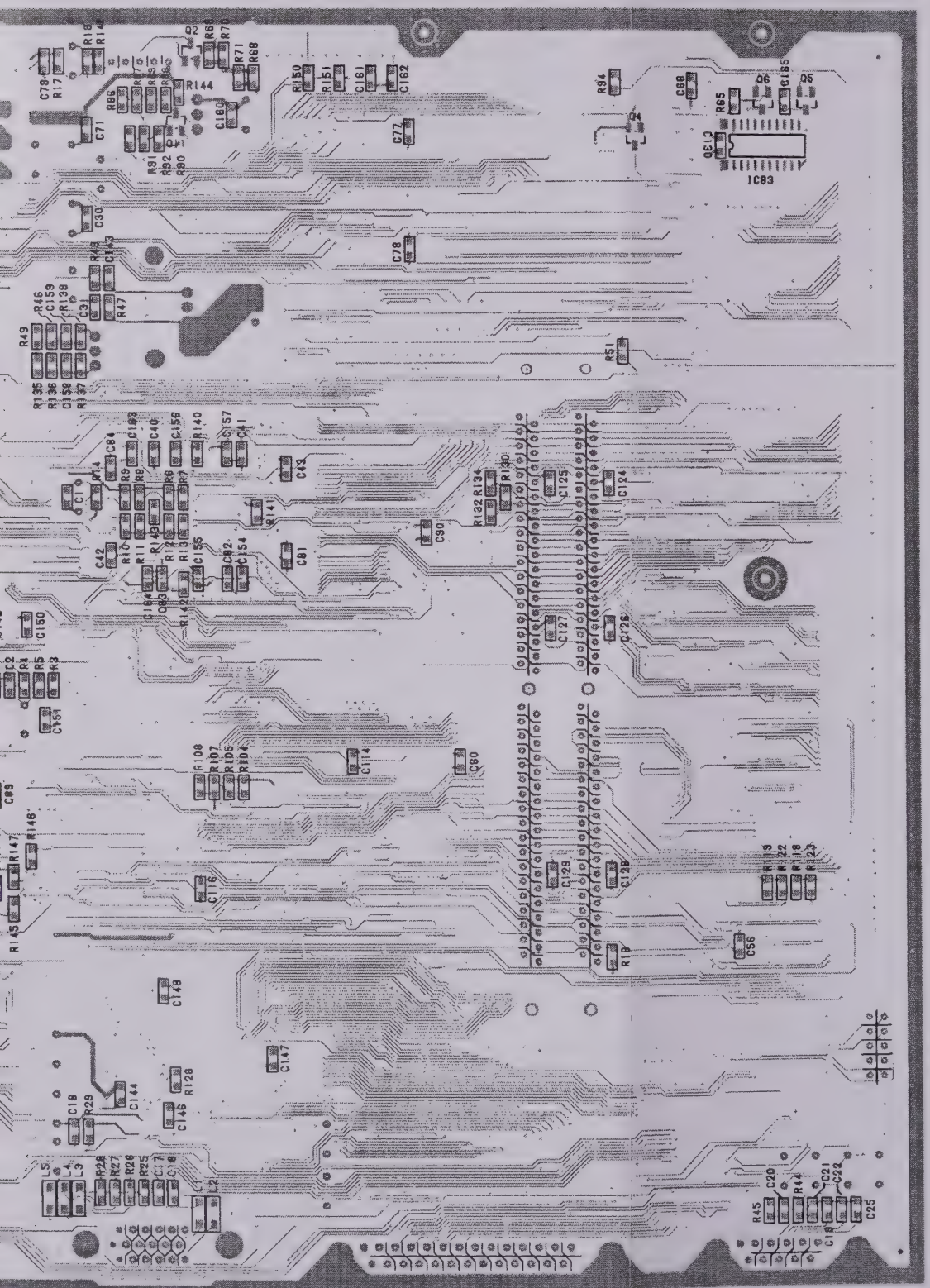

OARD (2/2)

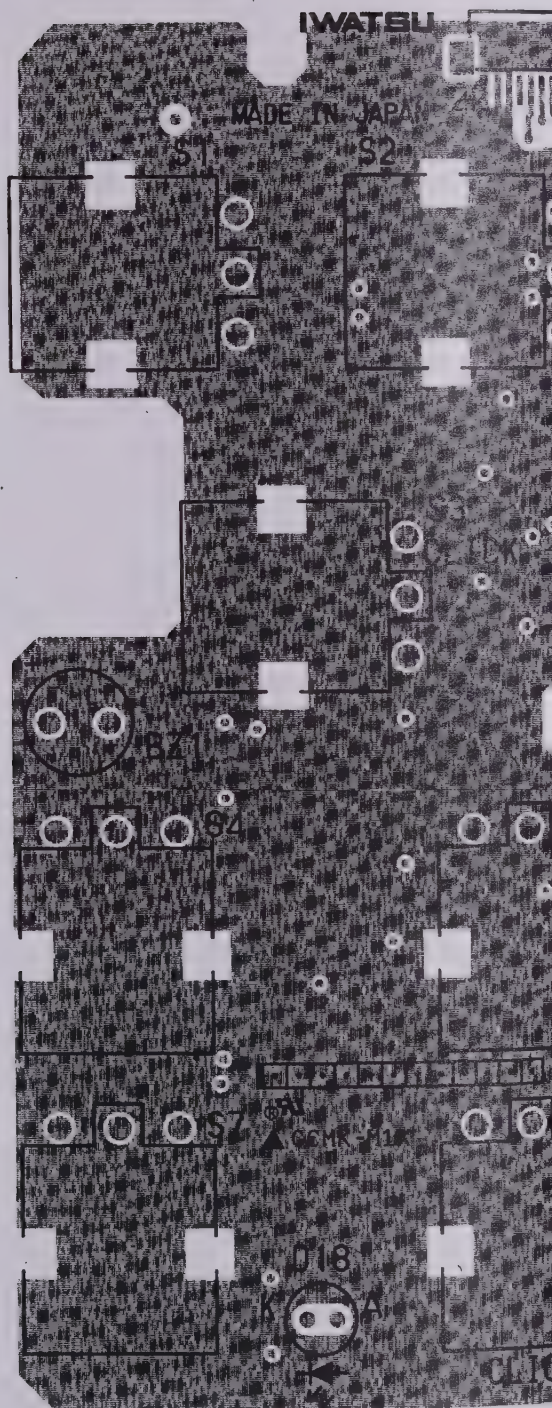

PANEL

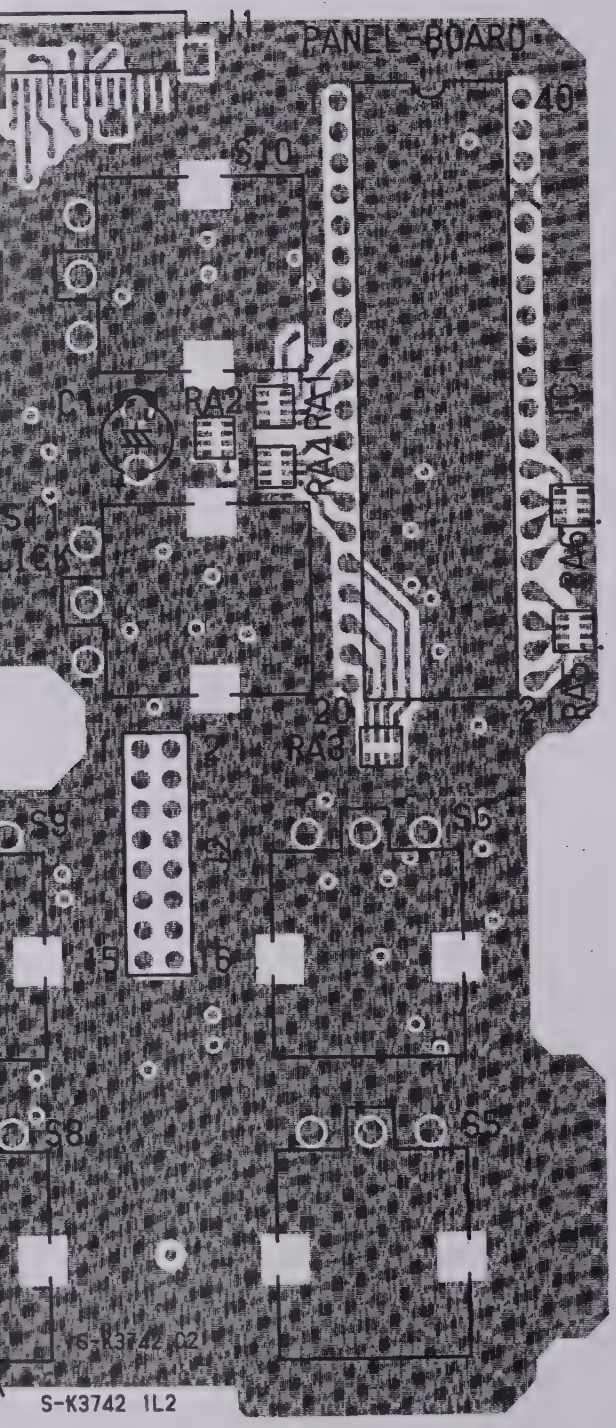
J1
PANEL BOARD
40
S10
RA2
RA4
RA1
RA6
RA5
20
RA3
S9
S6
S8
S5
S-K3742 1L2

BOARD (1/2)

C3
C4
C7
C8
C9
C10
C11
C12
C13
C14
D10
R5
C15
C16
D17
C17
D16
D11
C18
R4
D6
D15
C19
C20
D14
C21
D5
C22

PANEL

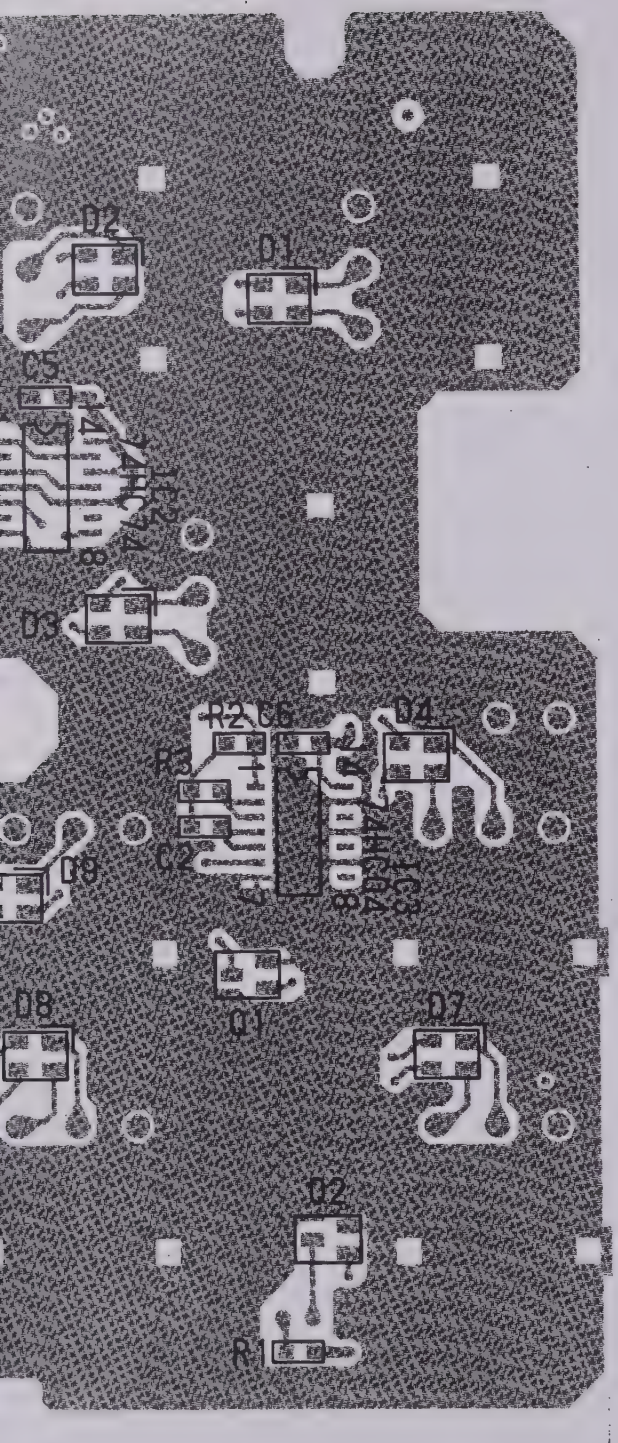

OARD (2/2)

LCD C

P1
30
1
LCD CONNECTOR
S-K3748C3 IWATSU
MADE IN JAPAN
S-K3748B3
MMK-89
94V-0
2
C5
30 S-K3748D3 S-K3748A3

NNECTOR

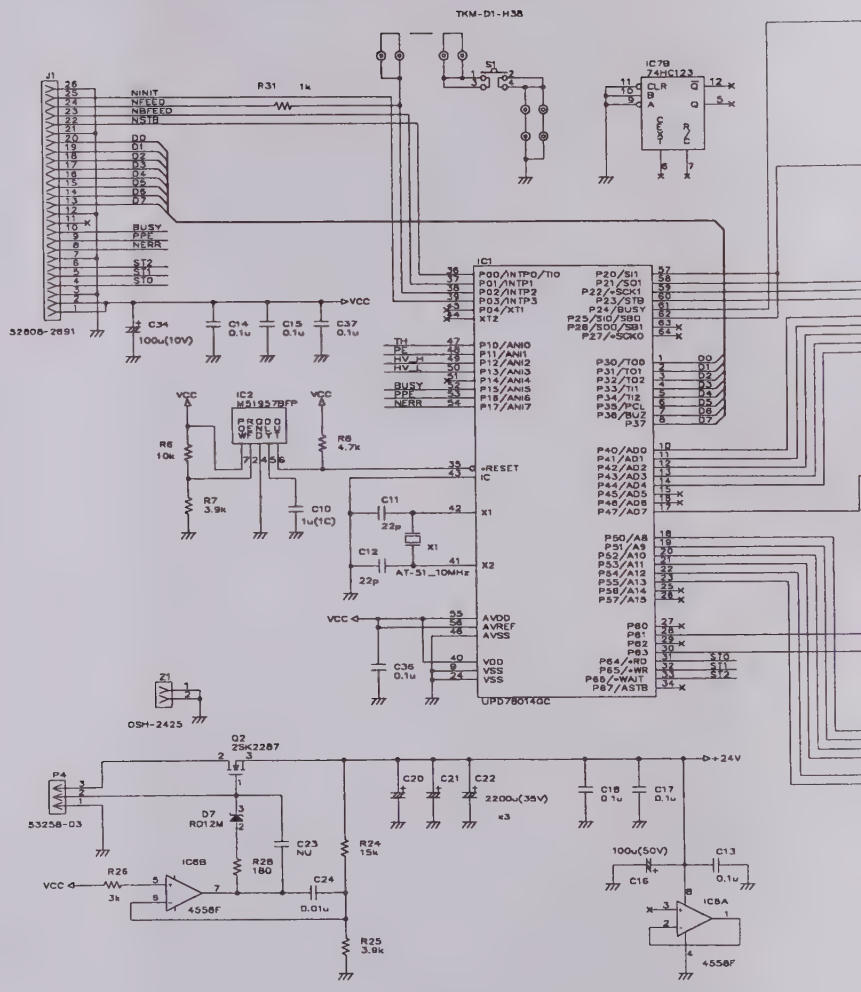
TKM-D1-H38
J1
52808-2691
NINIT
NFEED
NBFEED
NSTB
D0
D1
D2
D3
D4
D5
D6
D7
BUSY
PPE
NERR
ST2
ST1
ST0
R31 1k
S1
IC7B
74HC123
CLR
B
A
CEXT
REXT
C34
100u(10V)
C14
0.1u
C15
0.1u
C37
0.1u
VCC
IC1
P00/INTP0/TI0
P01/INTP1
P02/INTP2
P03/INTP3
P04/XT1
XT2
P10/ANI0
P11/ANI1
P12/ANI2
P13/ANI3
P14/ANI4
P15/ANI5
P16/ANI6
P17/ANI7
TH
PE
HV_H
HV_L
BUSY
PPE
NERR
P20/SI1
P21/SO1
P22/*SCK1
P23/STB
P24/BUSY
P25/SI0/SB0
P26/SO0/SB1
P27/*SCK0
P30/TO0
P31/TO1
P32/TO2
P33/TI1
P34/TI2
P35/PCL
P36/BUZ
P37
P40/AD0
P41/AD1
P42/AD2
P43/AD3
P44/AD4
P45/AD5
P46/AD6
P47/AD7
P50/A8
P51/A9
P52/A10
P53/A11
P54/A12
P55/A13
P56/A14
P57/A15
P60
P61
P62
P63
P64/*RD
P65/*WR
P66/*WAIT
P67/ASTB
*RESET
IC
X1
X2
AVDD
AVREF
AVSS
VDD
VSS
VSS
UPD78014GC
IC2
M51957BFP
PRODD
OENLV
WFDYT
R6
10k
R7
3.9k
R8
4.7k
C10
1u(1C)
C11
22p
C12
22p
X1
AT-51_10MHz
C36
0.1u
Z1
OSH-2425
Q2
2SK2287
P4
53258-03
D7
RD12M
C23
NU
R24
15k
R28
180
C24
0.01u
R25
3.9k
IC6B
4558F
R26
3k
C20
C21
C22
2200u(35V)
x3
C18
0.1u
C17
0.1u
+24V
100u(50V)
C16
C13
0.1u
IC6A
4558F

PRI

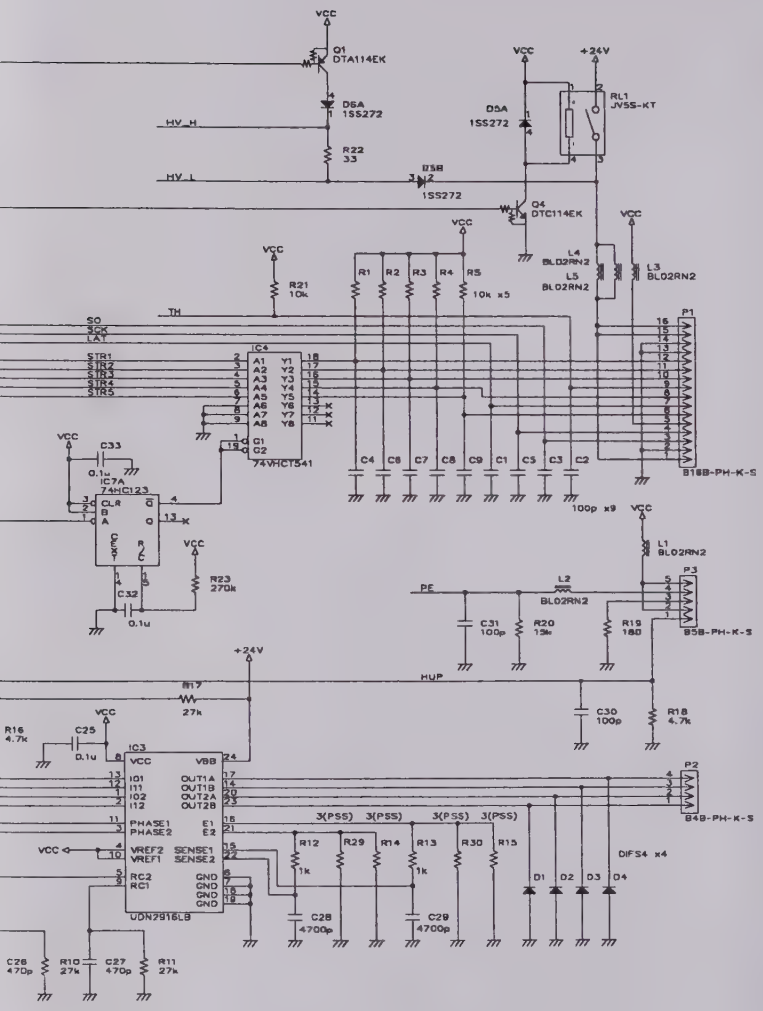
VCC
Q1
DTA114EK
D6A
1SS272
HV_H
R22
33
HV_L
D5B
1SS272
D5A
1SS272
+24V
RL1
JV5S-KT
Q4
DTC114EK
L4
BL02RN2
L5
BL02RN2
L3
BL02RN2
R21
10k
R1
R2
R3
R4
R5
10k x5
TH
SO
SCK
LAT
STR1
STR2
STR3
STR4
STR5
IC4
74VHCT541
P1
B18B-PH-K-S
C33
0.1u
IC7A
74HC123
C32
0.1u
R23
270k
C4
C6
C7
C8
C9
C1
C5
C3
C2
100p x9
L1
BL02RN2
PE
L2
BL02RN2
P3
B5B-PH-K-S
C31
100p
R20
13k
R19
180
+24V
HVP
R17
27k
C30
100p
R18
4.7k
R16
4.7k
C25
0.1u
IC3
P2
B4B-PH-K-S
3(PSS)
3(PSS)
3(PSS)
3(PSS)
R12
R29
R14
R13
R30
R15
1k
1k
DIFS4 x4
D1
D2
D3
D4
C28
4700p
C29
4700p
UDN2916LB
C26
470p
R10
27k
C27
470p
R11
27k

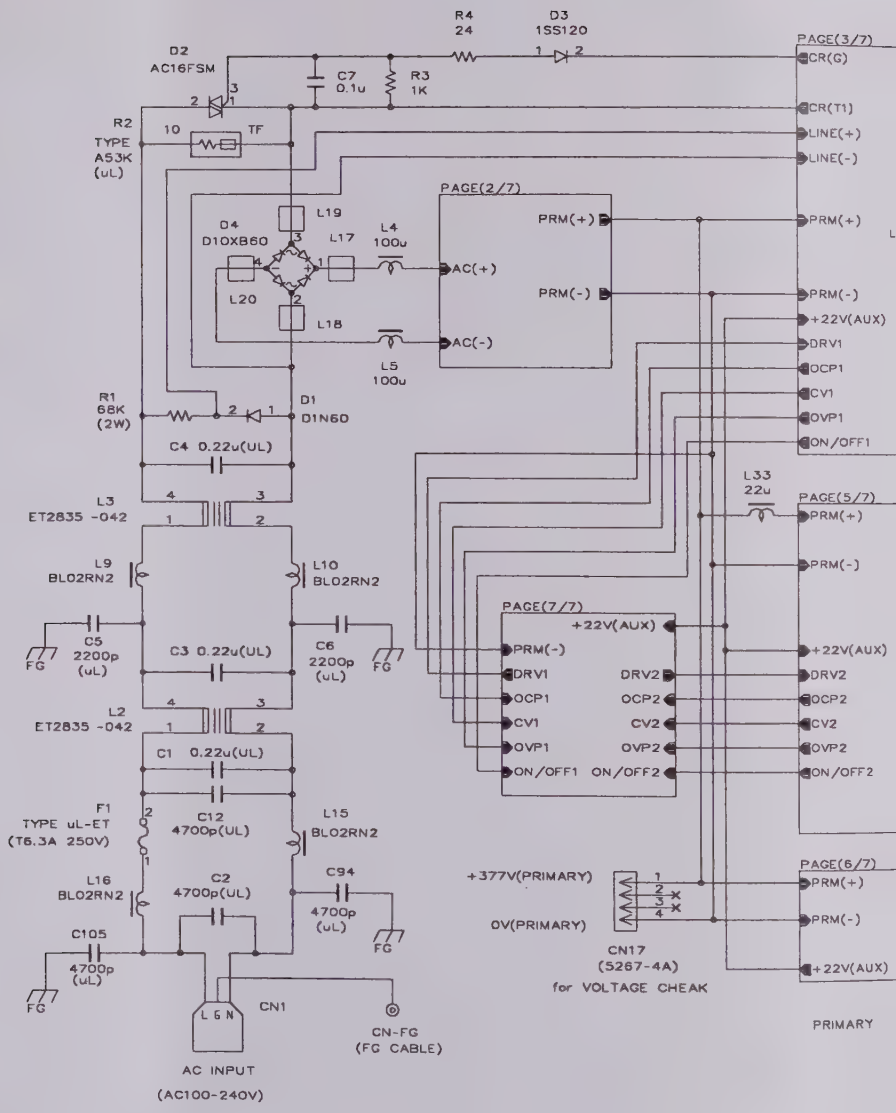
R4
24
D3
1SS120
D2
AC16FSM
C7
0.1u
R3
1K
R2
TYPE
A53K
(uL)
TF
PAGE(3/7)
CR(G)
CR(T1)
LINE(+)
LINE(-)
PAGE(2/7)
PRM(+)
PRM(-)
+22V(AUX)
DRV1
OCP1
CV1
OVP1
ON/OFF1
L19
L17
L4
100u
D4
D10XB60
L20
L18
AC(+)
AC(-)
L5
100u
R1
68K
(2W)
D1
D1N60
C4 0.22u(UL)
L33
22u
PAGE(5/7)
L3
ET2835 -042
L9
BL02RN2
L10
BL02RN2
C5
2200p
(uL)
C3 0.22u(UL)
C6
2200p
(uL)
FG
PAGE(7/7)
+22V(AUX)
PRM(-)
DRV1
DRV2
OCP1
OCP2
CV1
CV2
OVP1
OVP2
ON/OFF1
ON/OFF2
L2
ET2835 -042
C1 0.22u(UL)
F1
TYPE uL-ET
(T6.3A 250V)
C12
4700p(UL)
L15
BL02RN2
L16
BL02RN2
C2
4700p(UL)
C94
4700p
(uL)
C105
4700p
(uL)
+377V(PRIMARY)
0V(PRIMARY)
PAGE(6/7)
CN17
(5267-4A)
for VOLTAGE CHEAK
CN1
L
N
AC INPUT
(AC100-240V)
CN-FG
(FG CABLE)
PRIMARY

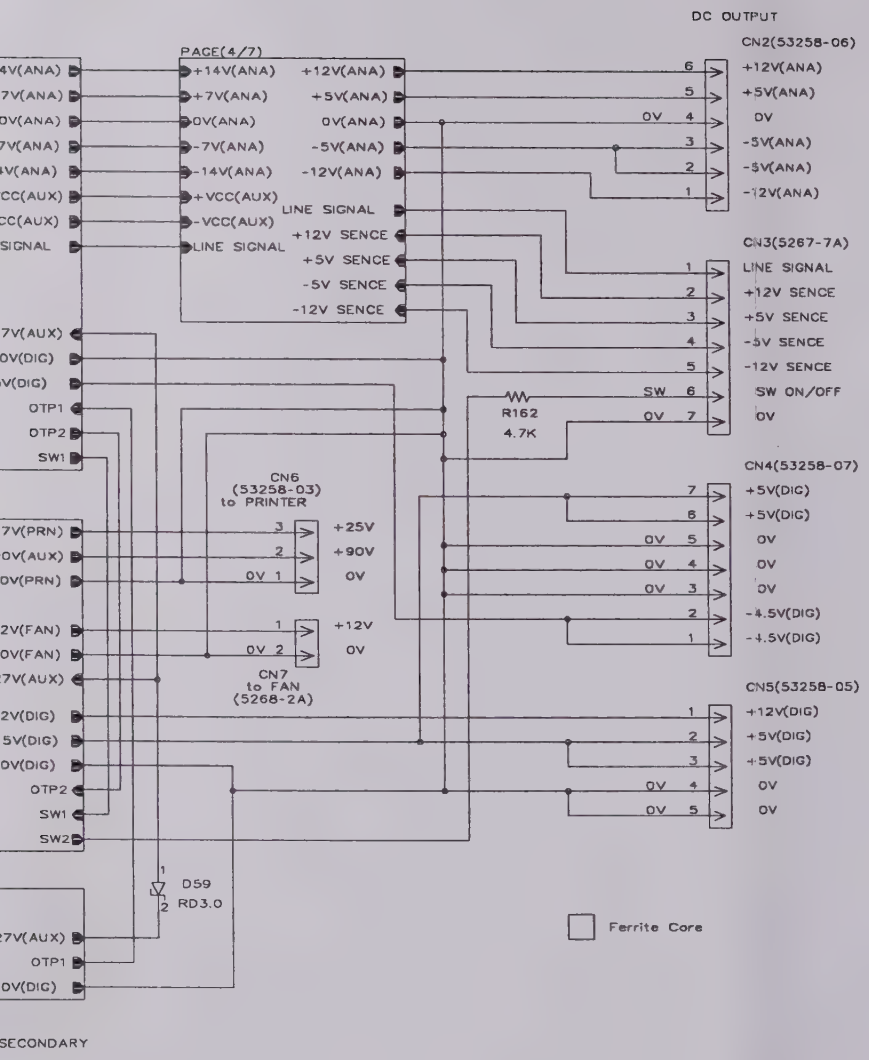
DC OUTPUT
PAGE(4/7)
+14V(ANA)
+7V(ANA)
0V(ANA)
-7V(ANA)
-14V(ANA)
+VCC(AUX)
-VCC(AUX)
LINE SIGNAL
+12V(ANA)
+5V(ANA)
0V(ANA)
-5V(ANA)
-12V(ANA)
LINE SIGNAL
+12V SENCE
+5V SENCE
-5V SENCE
-12V SENCE
CN2(53258-06)
+12V(ANA)
+5V(ANA)
0V
-5V(ANA)
-5V(ANA)
-12V(ANA)
CN3(5267-7A)
LINE SIGNAL
+12V SENCE
+5V SENCE
-5V SENCE
-12V SENCE
SW ON/OFF
0V
R162
4.7K
CN4(53258-07)
+5V(DIG)
+5V(DIG)
0V
0V
0V
-4.5V(DIG)
-4.5V(DIG)
CN6
(53258-03)
to PRINTER
+25V
+90V
0V
CN7
to FAN
(5268-2A)
+12V
0V
CN5(53258-05)
+12V(DIG)
+5V(DIG)
+5V(DIG)
0V
0V
D59
RD3.0
Ferrite Core
OTP1
OTP2
SW1
SW2
SECONDARY

PPLY (50) 1/7

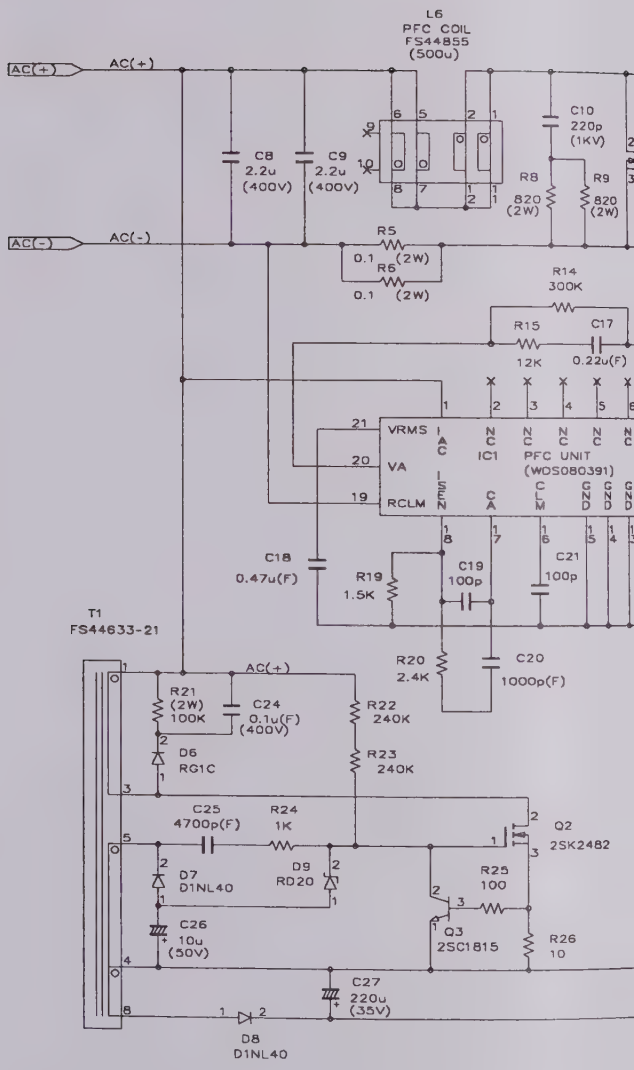
L6
PFC COIL
FS44855
(500u)
AC(+)
AC(-)
C8
2.2u
(400V)
C9
2.2u
(400V)
C10
220p
(1KV)
R8
820
(2W)
R9
820
(2W)
R5
0.1
(2W)
R6
0.1
(2W)
R14
300K
R15
12K
C17
0.22u(F)
VRMS
VA
RCLM
IC1
PFC UNIT
(WDS080391)
C18
0.47u(F)
R19
1.5K
C19
100p
C21
100p
R20
2.4K
C20
1000p(F)
T1
FS44633-21
R21
(2W)
100K
C24
0.1u(F)
(400V)
R22
240K
R23
240K
D6
RG1C
C25
4700p(F)
R24
1K
Q2
2SK2482
D7
D1NL40
D9
RD20
R25
100
C26
10u
(50V)
Q3
2SC1815
R26
10
C27
220u
(35V)
D8
D1NL40

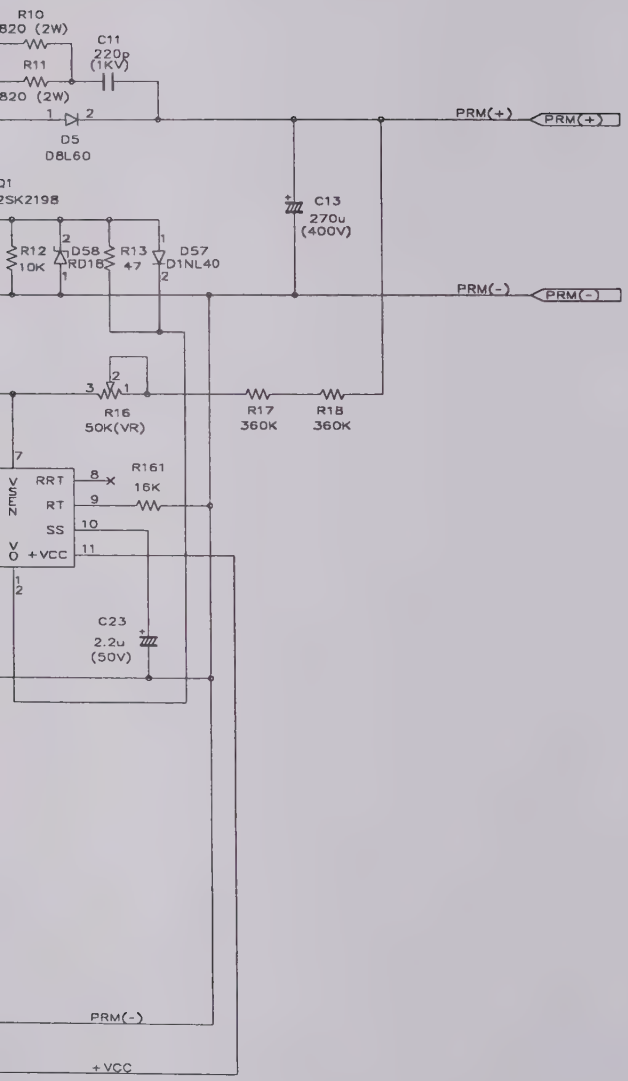
R10
820 (2W)
R11
820 (2W)
C11
220p
(1KV)
D5
D8L60
PRM(+)
PRM(+)
Q1
2SK2198
C13
270u
(400V)
R12
10K
D58
RD18
R13
47
D57
D1NL40
PRM(-)
PRM(-)
R16
50K(VR)
R17
360K
R18
360K
R161
16K
RRT
RT
SS
+VCC
C23
2.2u
(50V)
PRM(-)
+VCC

PPLY (50) 2/7

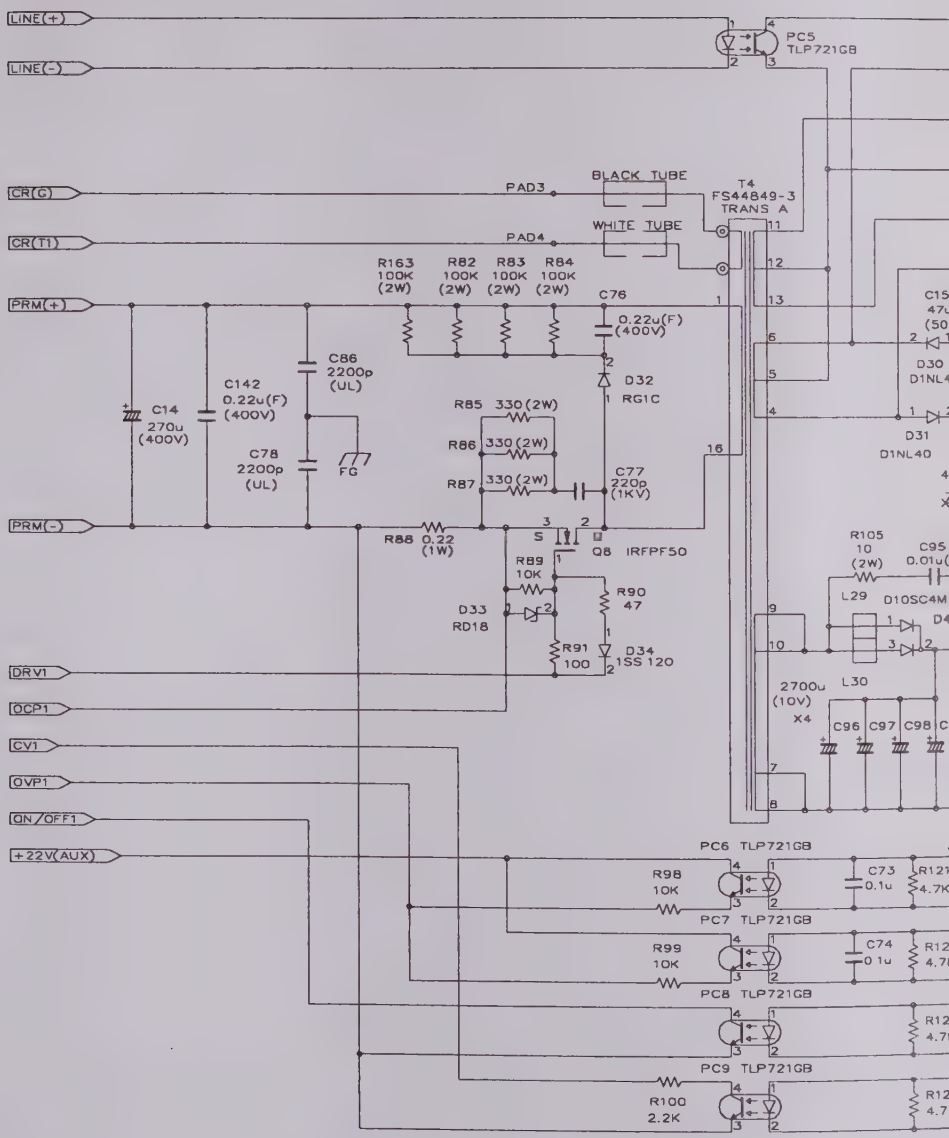
LINE(+)
LINE(-)
CR(G)
CR(T1)
PRM(+)
PRM(-)
DRV1
OCP1
CV1
OVP1
ON/OFF1
+22V(AUX)
PC5 TLP721GB
BLACK TUBE
WHITE TUBE
PAD3
PAD4
T4
FS44849-3
TRANS A
R163 100K (2W)
R82 100K (2W)
R83 100K (2W)
R84 100K (2W)
C76 0.22u(F) (400V)
D32 1 RG1C
C86 2200p (UL)
C142 0.22u(F) (400V)
C14 270u (400V)
C78 2200p (UL)
FG
R85 330(2W)
R86 330(2W)
R87 330(2W)
C77 220p (1KV)
R88 0.22 (1W)
Q8 IRFPF50
R89 10K
R90 47
D33 RD18
R91 100
D34 1SS 120
R105 10 (2W)
L29
D10SC4M
2700u (10V) X4
L30
C96
C97
C98
PC6 TLP721GB
R98 10K
C73 0.1u
PC7 TLP721GB
R99 10K
C74 0.1u
PC8 TLP721GB
PC9 TLP721GB
R100 2.2K

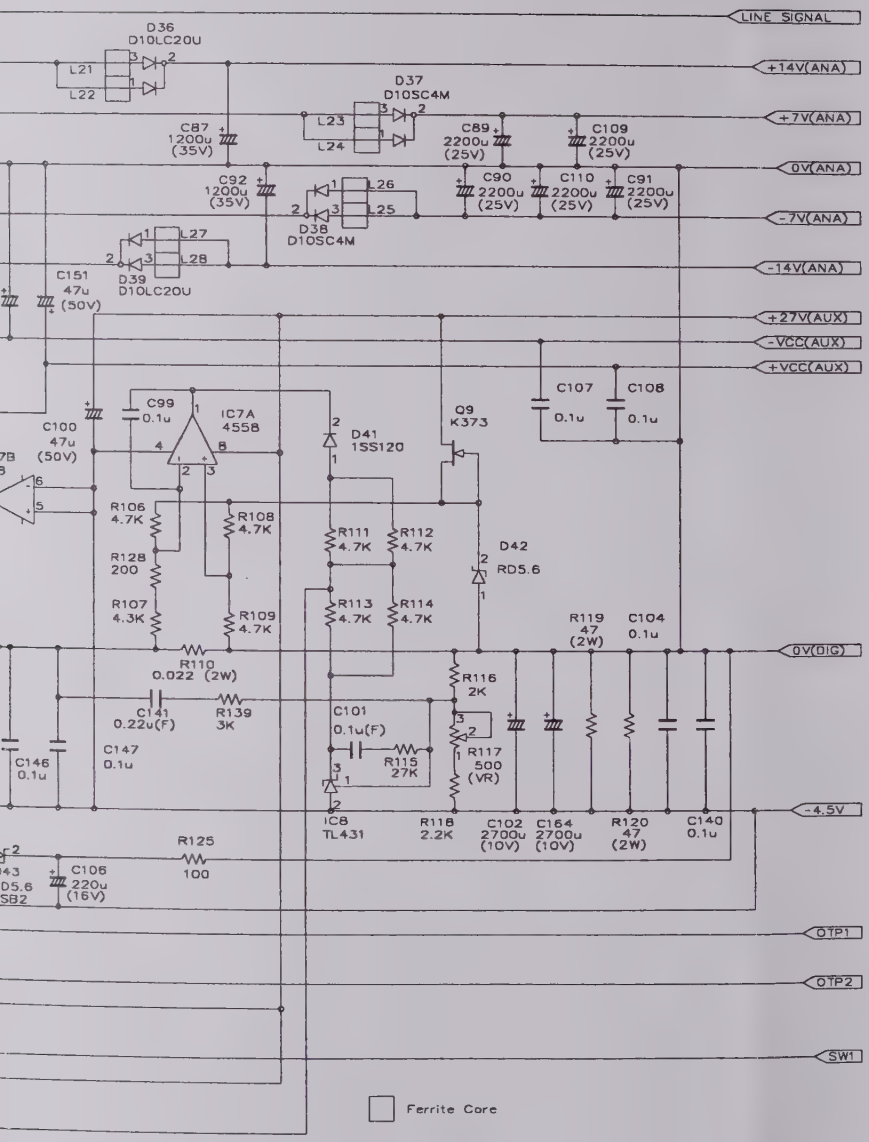
LINE SIGNAL
+14V(ANA)
+7V(ANA)
0V(ANA)
-7V(ANA)
-14V(ANA)
+27V(AUX)
-VCC(AUX)
+VCC(AUX)
0V(DIG)
-4.5V
OTP1
OTP2
SW1
D36 D10LC20U
L21
L22
D37 D10SC4M
L23
L24
C87 1200u (35V)
C89 2200u (25V)
C109 2200u (25V)
C92 1200u (35V)
L26
L25
D38 D10SC4M
C90 2200u (25V)
C110 2200u (25V)
C91 2200u (25V)
L27
L28
D39 D10LC20U
C151 47u (50V)
C107 0.1u
C108 0.1u
C99 0.1u
IC7A 4558
Q9 K373
D41 1SS120
C100 47u (50V)
R106 4.7K
R108 4.7K
R111 4.7K
R112 4.7K
D42 RD5.6
R128 200
R107 4.3K
R109 4.7K
R113 4.7K
R114 4.7K
R119 47 (2W)
C104 0.1u
R110 0.022 (2W)
R116 2K
C141 0.22u(F)
R139 3K
C101 0.1u(F)
R115 27K
R117 500 (VR)
C146 0.1u
C147 0.1u
IC8 TL431
R118 2.2K
C102 2700u (10V)
C164 2700u (10V)
R120 47 (2W)
C140 0.1u
R125 100
C106 220u (16V)
Ferrite Core

PPLY (50) 3/7

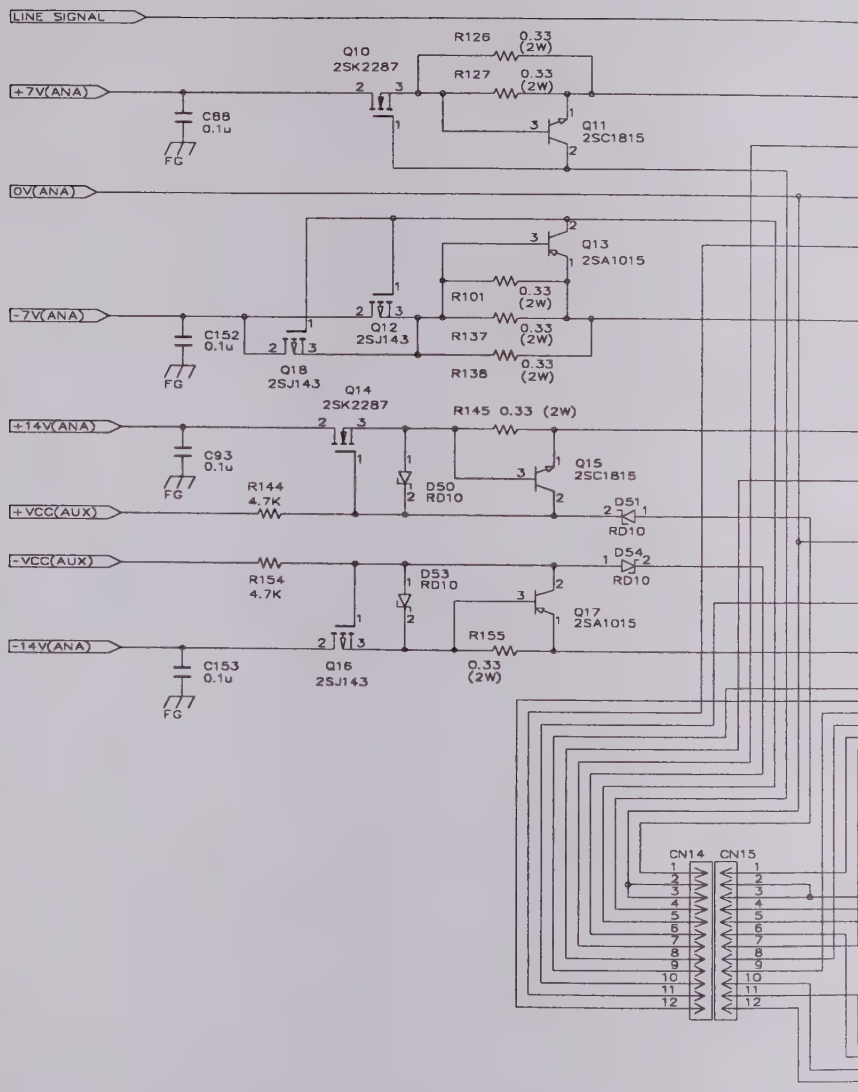
LINE SIGNAL
+7V(ANA)
0V(ANA)
-7V(ANA)
+14V(ANA)
+VCC(AUX)
-VCC(AUX)
-14V(ANA)
Q10
2SK2287
R126 0.33 (2W)
R127 0.33 (2W)
Q11
2SC1815
C88
0.1u
FG
Q13
2SA1015
R101 0.33 (2W)
Q12
2SJ143
R137 0.33 (2W)
R138 0.33 (2W)
C152
0.1u
Q18
2SJ143
Q14
2SK2287
R145 0.33 (2W)
Q15
2SC1815
C93
0.1u
R144
4.7K
D50
RD10
D51
RD10
D54
RD10
R154
4.7K
D53
RD10
Q17
2SA1015
R155
0.33 (2W)
C153
0.1u
Q16
2SJ143
CN14
CN15

POWER S

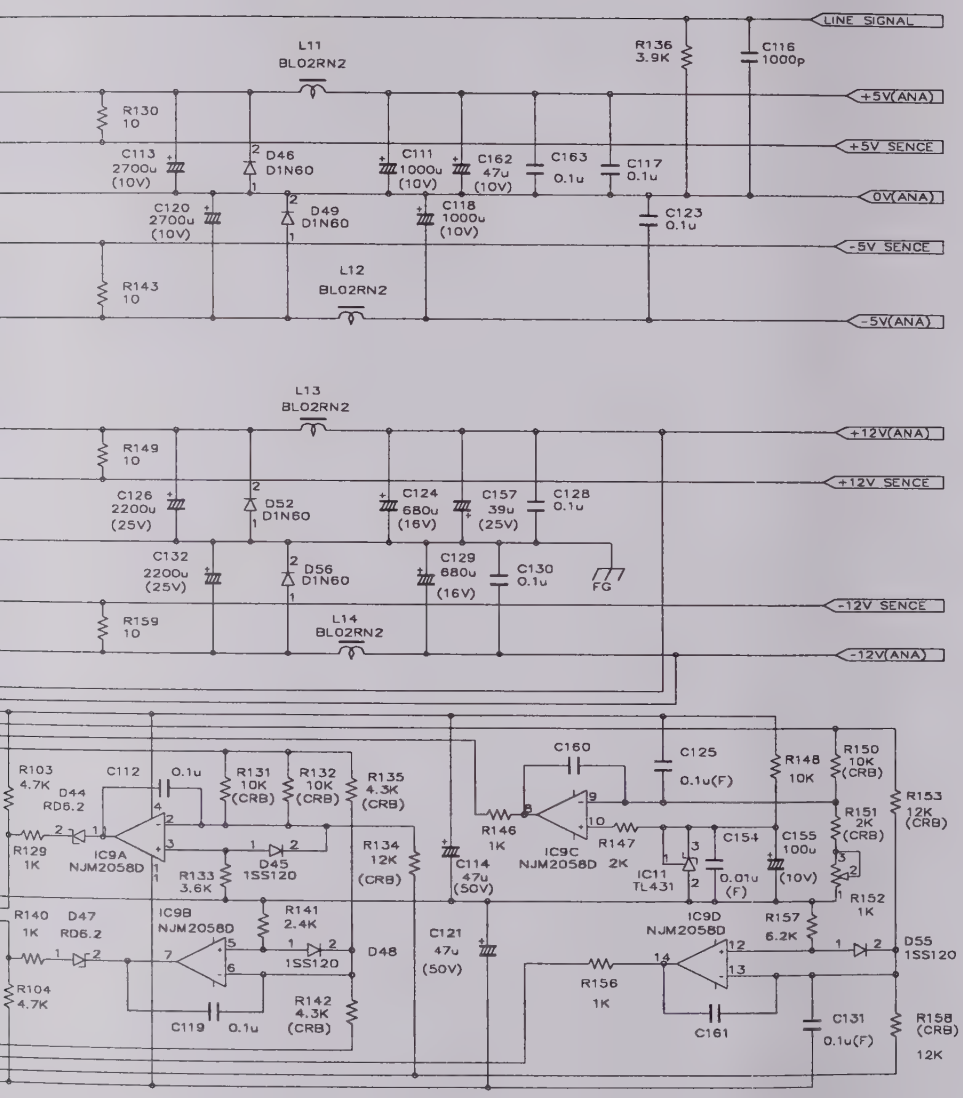
LINE SIGNAL
L11
BL02RN2
R136
3.9K
C116
1000p
+5V(ANA)
R130
10
C113
2700u
(10V)
D46
D1N60
C111
1000u
(10V)
C162
47u
(10V)
C163
0.1u
C117
0.1u
+5V SENCE
0V(ANA)
C120
2700u
(10V)
D49
D1N60
C118
1000u
(10V)
C123
0.1u
-5V SENCE
R143
10
L12
BL02RN2
-5V(ANA)
L13
BL02RN2
+12V(ANA)
R149
10
C126
2200u
(25V)
D52
D1N60
C124
680u
(16V)
C157
39u
(25V)
C128
0.1u
+12V SENCE
C132
2200u
(25V)
D56
D1N60
C129
680u
(16V)
C130
0.1u
FG
-12V SENCE
R159
10
L14
BL02RN2
-12V(ANA)
R103
4.7K
D44
RD6.2
C112
0.1u
R131
10K
(CRB)
R132
10K
(CRB)
R135
4.3K
(CRB)
R129
1K
IC9A
NJM2058D
R133
3.6K
D45
1SS120
R134
12K
(CRB)
C160
C125
0.1u(F)
R148
10K
R150
10K
(CRB)
R153
12K
(CRB)
R146
1K
IC9C
NJM2058D
2K
R147
C154
C155
100u
(10V)
R151
2K
(CRB)
IC11
TL431
0.01u
(F)
R152
1K
C114
47u
(50V)
R140
1K
D47
RD6.2
IC9B
NJM2058D
R141
2.4K
D48
1SS120
C121
47u
(50V)
IC9D
NJM2058D
R157
6.2K
D55
1SS120
R156
1K
R104
4.7K
C119
0.1u
R142
4.3K
(CRB)
C161
C131
0.1u(F)
R158
(CRB)
12K

PPLY (50) 4/7

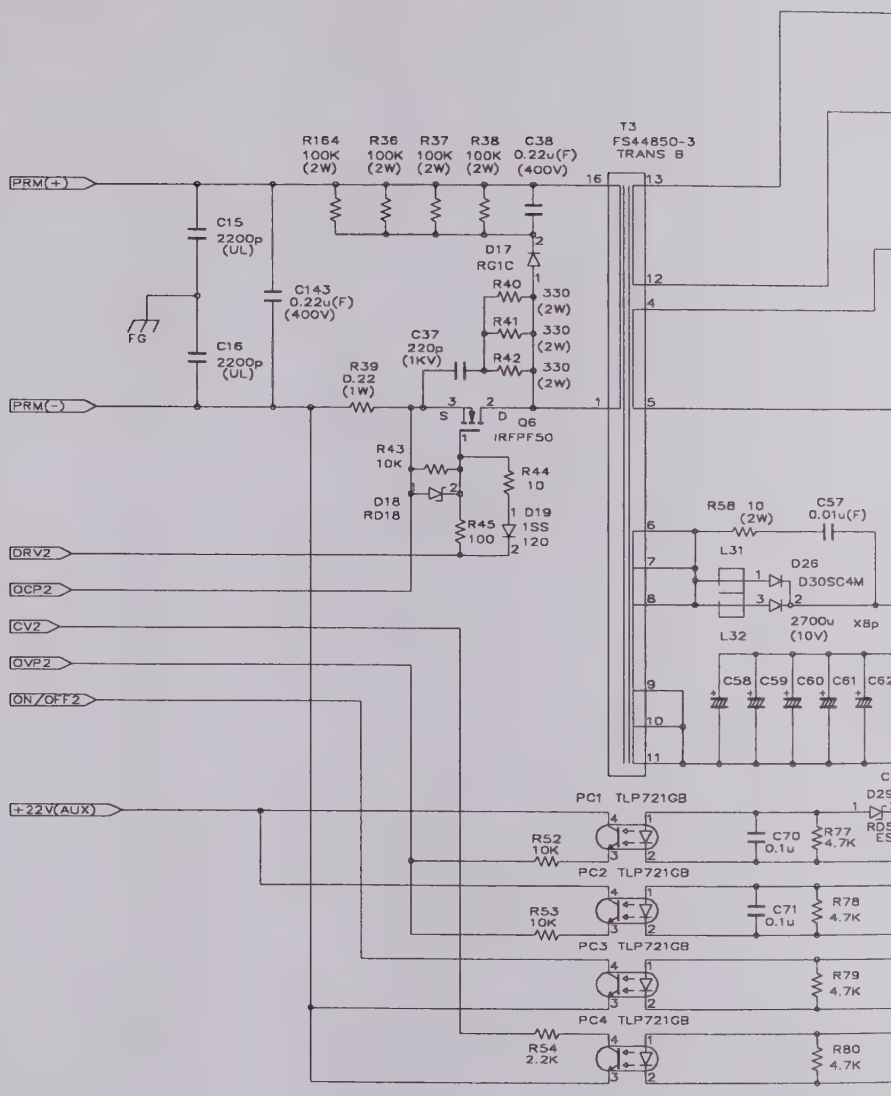
T3
FS44850-3
TRANS B
R164
100K
(2W)
R36
100K
(2W)
R37
100K
(2W)
R38
100K
(2W)
C38
0.22u(F)
(400V)
PRM(+)
PRM(-)
C15
2200p
(UL)
C16
2200p
(UL)
C143
0.22u(F)
(400V)
FG
D17
RG1C
R40
330
(2W)
R41
330
(2W)
R42
330
(2W)
C37
220p
(1KV)
R39
0.22
(1W)
Q6
IRFPF50
R43
10K
R44
10
D18
RD18
D19
1SS
120
R45
100
DRV2
OCP2
CV2
OVP2
ON/OFF2
+22V(AUX)
R58 10
(2W)
C57
0.01u(F)
L31
D26
D30SC4M
L32
2700u
(10V)
C58
C59
C60
C61
PC1 TLP721GB
PC2 TLP721GB
PC3 TLP721GB
PC4 TLP721GB
R52
10K
R53
10K
R54
2.2K
C70
0.1u
C71
0.1u
R77
4.7K
R78
4.7K
R79
4.7K
R80
4.7K

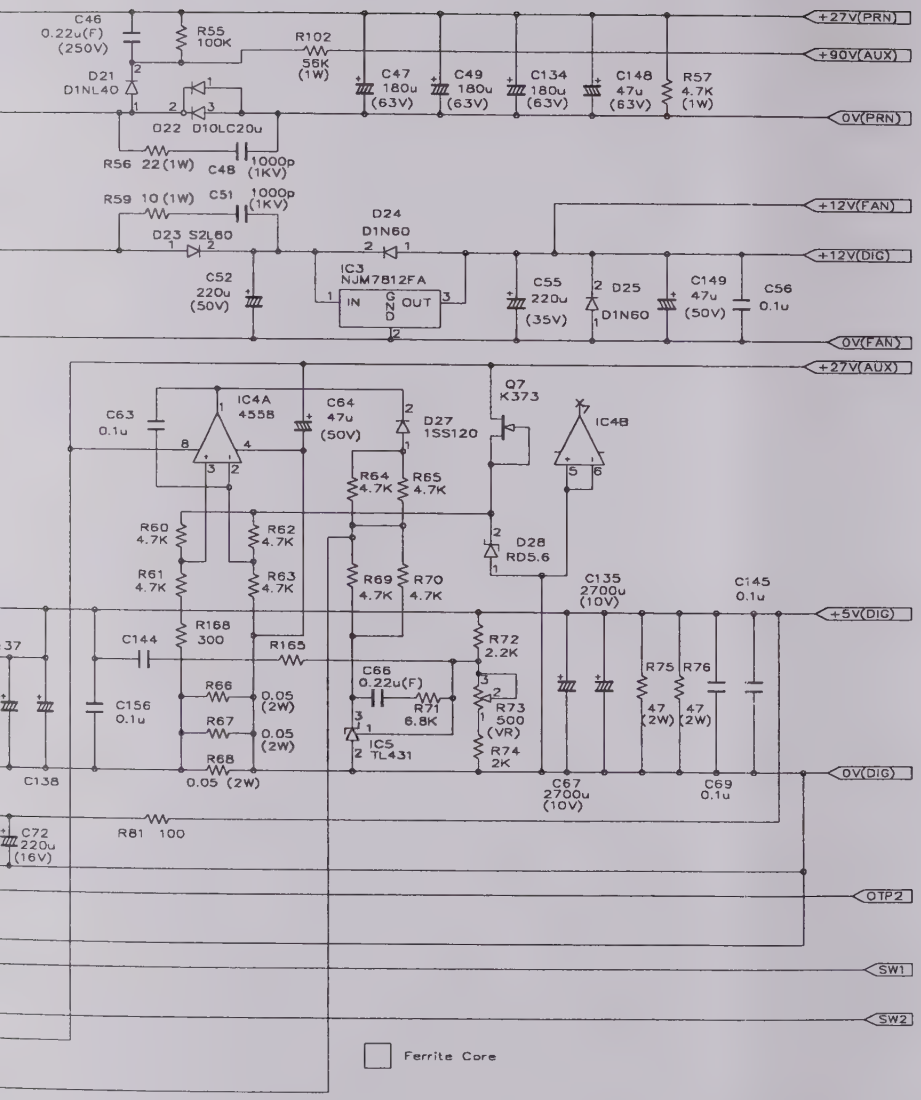
C46
0.22u(F)
(250V)
R55
100K
R102
56K
(1W)
D21
D1NL40
D22 D10LC20u
R56 22(1W)
C48
1000p
(1KV)
C47
180u
(63V)
C49
180u
(63V)
C134
180u
(63V)
C148
47u
(63V)
R57
4.7K
(1W)
+27V(PRN)
+90V(AUX)
0V(PRN)
R59 10(1W)
C51
1000p
(1KV)
D23 S2L60
D24
D1N60
IC3
NJM7812FA
IN
GND
OUT
C52
220u
(50V)
C55
220u
(35V)
D25
D1N60
C149
47u
(50V)
C56
0.1u
+12V(FAN)
+12V(DIG)
0V(FAN)
+27V(AUX)
C63
0.1u
IC4A
4558
C64
47u
(50V)
D27
1SS120
Q7
K373
IC4B
R64
4.7K
R65
4.7K
D28
RD5.6
R60
4.7K
R62
4.7K
R61
4.7K
R63
4.7K
R69
4.7K
R70
4.7K
C135
2700u
(10V)
C145
0.1u
+5V(DIG)
R168
300
R165
C144
C66
0.22u(F)
R71
6.8K
R72
2.2K
R73
500
(VR)
R74
2K
IC5
TL431
R66
0.05
(2W)
R67
0.05
(2W)
R68
0.05 (2W)
C156
0.1u
C138
R75
47
(2W)
R76
47
(2W)
C67
2700u
(10V)
C69
0.1u
0V(DIG)
R81 100
C72
220u
(16V)
OTP2
SW1
SW2
Ferrite Core

PLY (50) 5/7

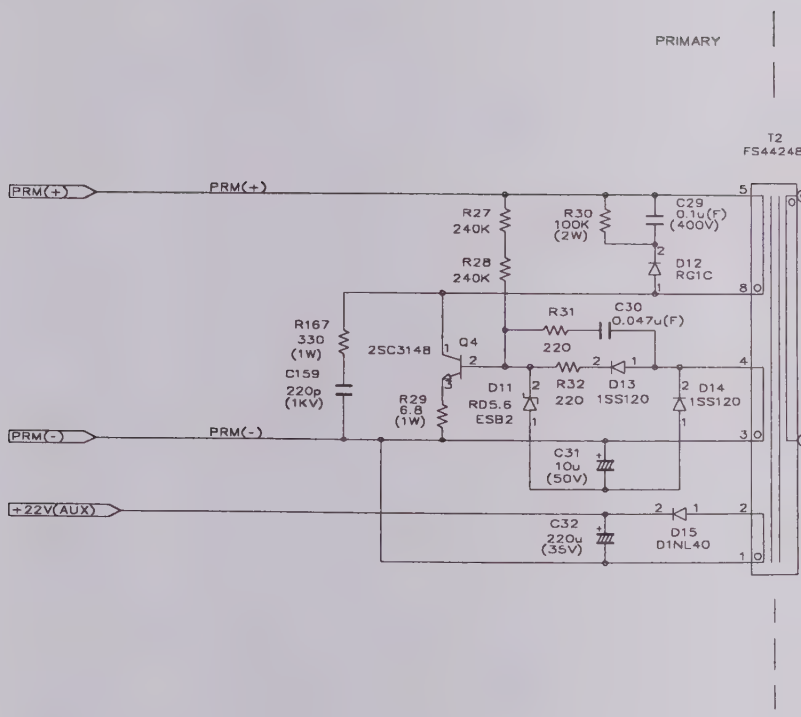
PRIMARY
T2
FS4424B
PRM(+)
PRM(+)
R27
240K
R30
100K
(2W)
C29
0.1u(F)
(400V)
D12
RG1C
R28
240K
R31
220
C30
0.047u(F)
R167
330
(1W)
C159
220p
(1KV)
2SC3148
Q4
R29
6.8
(1W)
D11
RD5.6
ESB2
R32
220
D13
1SS120
D14
1SS120
PRM(-)
PRM(-)
C31
10u
(50V)
+22V(AUX)
C32
220u
(35V)
D15
D1NL40

POWER S

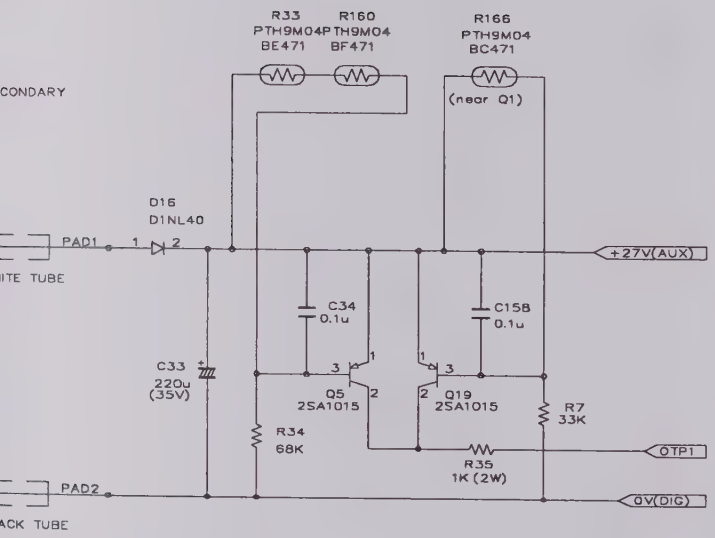
R33
PTH9M04P
BE471
R160
PTH9M04
BF471
R166
PTH9M04
BC471
(near Q1)
CONDARY
D16
D1NL40
PAD1
1
2
ITE TUBE
+27V(AUX)
C34
0.1u
C158
0.1u
C33
220u
(35V)
3
1
Q5
2SA1015
2
1
3
Q19
2SA1015
2
R7
33K
R34
68K
OTP1
R35
1K (2W)
PAD2
0V(DIG)
ACK TUBE

PPLY (50) 6/7

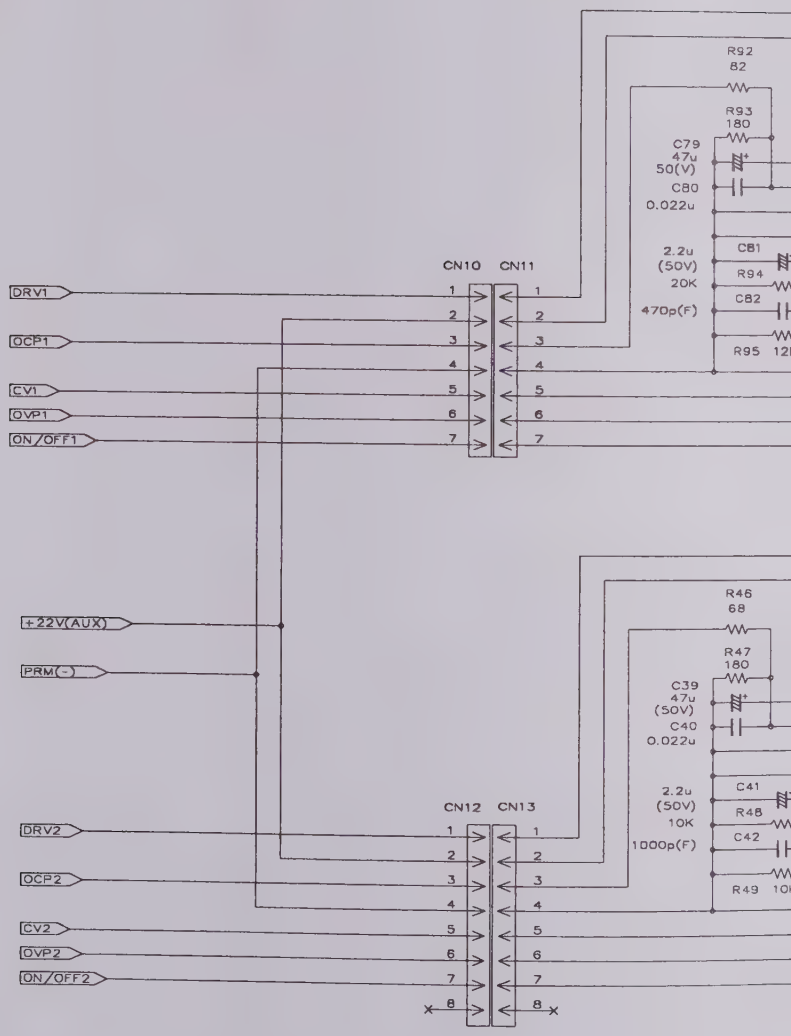
CN10
CN11
DRV1
OCP1
CV1
OVP1
ON/OFF1
+22V(AUX)
PRM(-)
CN12
CN13
DRV2
OCP2
CV2
OVP2
ON/OFF2
R92
82
R93
180
C79
47u
50(V)
C80
0.022u
2.2u
(50V)
20K
470p(F)
C81
R94
C82
R95
R46
68
R47
180
C39
47u
(50V)
C40
0.022u
2.2u
(50V)
10K
1000p(F)
C41
R48
C42
R49

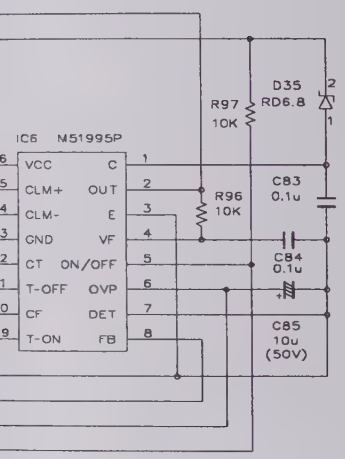
IC6 M51995P
VCC
CLM+
CLM-
GND
CT
T-OFF
CF
T-ON
C
OUT
E
VF
ON/OFF
OVP
DET
FB
R97
10K
D35
RD6.8
R96
10K
C83
0.1u
C84
0.1u
C85
10u
(50V)

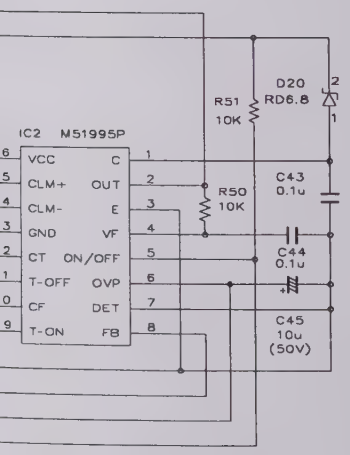
IC2 M51995P
VCC
CLM+
CLM-
GND
CT
T-OFF
CF
T-ON
C
OUT
E
VF
ON/OFF
OVP
DET
FB
R51
10K
D20
RD6.8
R50
10K
C43
0.1u
C44
0.1u
C45
10u
(50V)

PPLY (50) 7/7

POWER BOARD

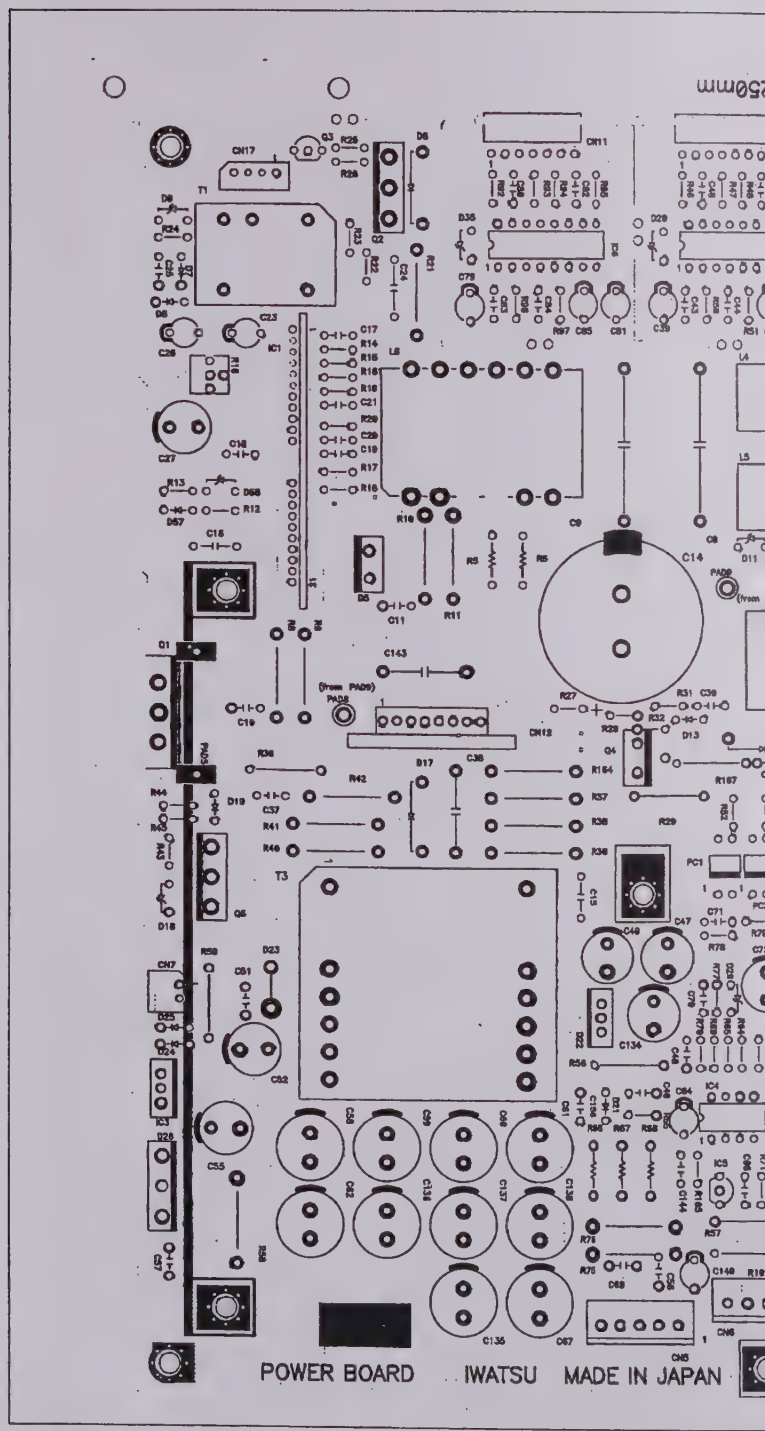

POW

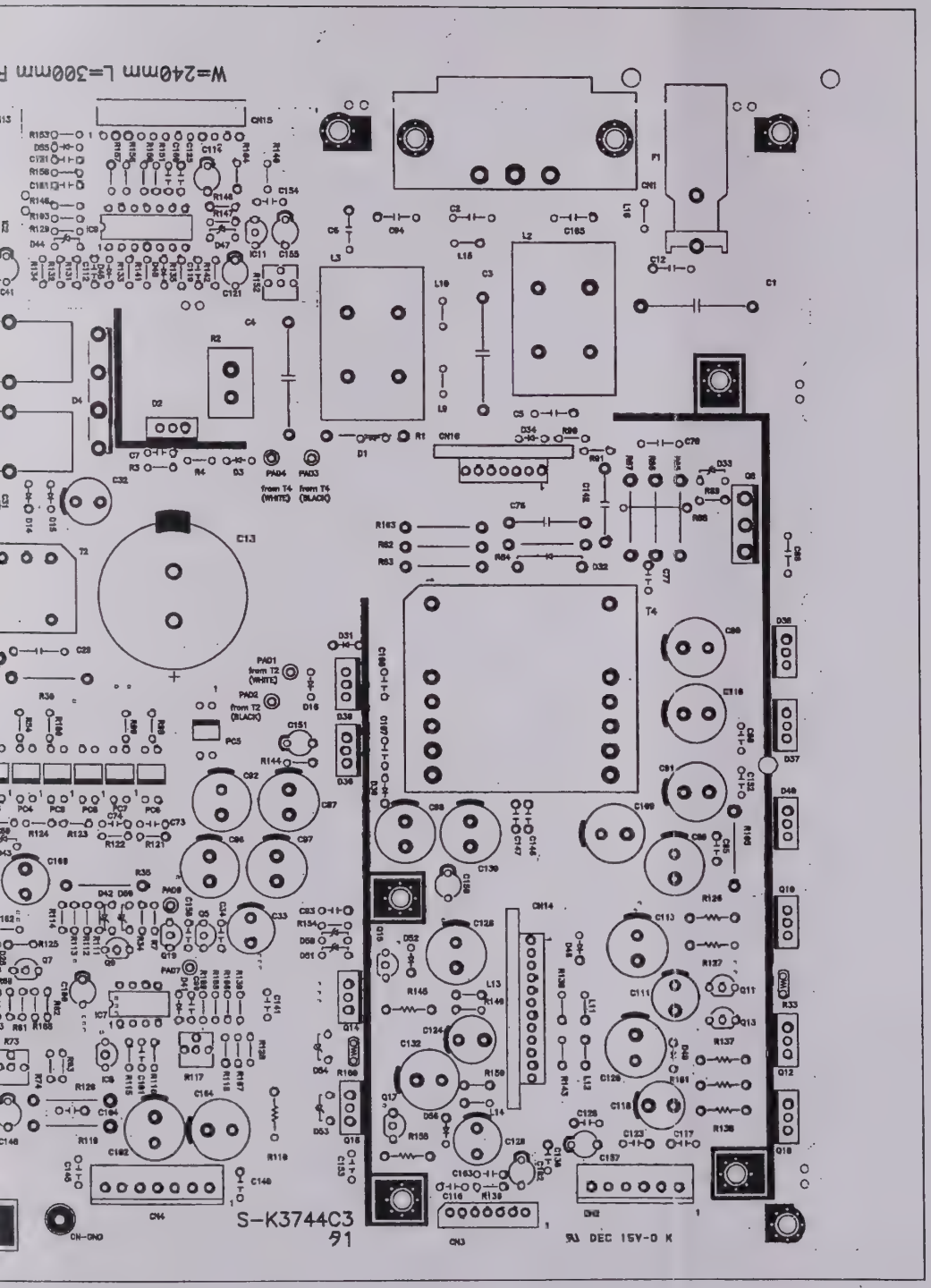

R BOARD

CH1 FRONT END 2

CIRCUIT REFERENCE	IWATSU PART NO.	DESCRIPTION
2C1, 2C2	DCC816471	C2012CH 1H 080D A TD84N
2C3, 2C4	DCC850101	GRM42-6CH 050C500PT TE0804N
2C6	DCV819091	TZBX4 Z250BA110 TE1208R
2C7	DCC816521	C2012CH 1H 220J A TD84N
2C10	DCC850101	GRM42-6CH 050C500PT TE0804N
2C12	DCV819091	TZBX4 Z250BA110 TE1208R
2C13	DCC816521	C2012CH 1H 220J A TD84N
2C14	DCC816451	C2012CH 1H 060D A TD84N
2C15	DCC816381	C2012CH 1H 020C A TD84N
2C18	DCC816491	C2012CH 1H 100D A TD84N
2C19	DCC810511	C2012F 1H 103Z A TD84N
2C20	DCC840041	GHM1530B 473K250 TE0804N
2C21	DCC850011	GRM42-6 W5R 222K500 TE0804N
2C22	DCC850091	GRM42-6CH 020C500PT TE0804N
2C24	DCC816371	C2012CH 1H 1R5C A TD84N
2C25	DCV819051	TZBX4 Z030BA110 TE1208R
2C26	DCC811731	C1608B 1H 102K A TD0804N
2C27 to 2C29	DCC810511	C2012F 1H 103Z A TD84N
2C32 to 2C35	DCC810511	C2012F 1H 103Z A TD84N
2C36	DCC810571	C2012F 1H 104Z A TD0804N
2C37	DCC816451	C2012CH 1H 060D A TD84N
2C39	DCC816601	C2012CH 1H 101J A TD84N
2C40	DCC810571	C2012F 1H 104Z A TD0804N
2C41	DCC810981	C2012B 1H 153K A TD84N
2C42	DCC811161	C2012B 1H 333K A TD84N
2C43 to 2C46	DCC810511	C2012F 1H 103Z A TD84N
2C47	DCC811161	C2012B 1H 333K A TD84N
2C48	DCV819051	TZBX4 Z030BA110 TE1208R
2C49	DCC810511	C2012F 1H 103Z A TD84N
2C50	DCE919141	SRA 10VB-100 TC04R
2C51 to 2C53	DCC810511	C2012F 1H 103Z A TD84N
2C54, 2C55	DCC810571	C2012F 1H 104Z A TD0804N
2C58	DCC820021	C2012F 1C 105Z A TD84N
2C59, 2C60	DCC810511	C2012F 1H 103Z A TD84N
2C70 to 2C74	DCC816801	C2012CH 1H 102J A TD84N
2C75, 2C76	DCC820251	C2012B 1C 474K A TD0804N
2C80	DCC810571	C2012F 1H 104Z A TD0804N
2C81	DCC816371	C2012CH 1H 1R5C A TD84N
2C83 to 2C86	DCC820021	C2012F 1C 105Z A TD84N
2C87	DCC810511	C2012F 1H 103Z A TD84N
2C90 to 2C96	DCC810511	C2012F 1H 103Z A TD84N
2C99	DCC819091	GRM42-6B 106K6.3PT TE0804N
2D1, 2D2	DDD810461	HSM 124S-JTL TE0804L
2D3	DDD810081	1SS 226 (TE85L) TE0804L
2D4 to 2D6	DDD810241	1SS 272 TE0804R
2D7 to 2D9	DDD810461	HSM 124S-JTL TE0804L
2D10, 2D11	DDD810241	1SS 272 TE0804R
2FL1 to 2FL7	DCL870041	NFM39R12C222T1 TE0804N
2IC1	DIC614811	LT 1097S8-T2 TE1208B
2IC2	DIC619191	NJM 082M(TE3) TE1208L
2IC3	DIC614891	HFE428 1GHZ FRONT END
2IC4	DIC631231	HTR420 TRIGGER COMPARATOR

CH1 FRONT END 2

CIRCUIT REFERENCE	IWATSU PART NO.	DESCRIPTION
2IC5	DIC483321	74HC595F/AF TE1612B
2IC6	DIC619271	TA 75S558F (TE85L) TE0804L
2J1A	DCN126091	7093XXP01 PROBUS CONNECTOR
2J1B	DCN045681	CONNECTOR BNC-BR-PC-1
2L1	DCL810831	HK1608 18NJ-T TD0804N
2L2	DCL811011	BLM21A121FPT TD0804N
2L3	DCL810811	HK1608 10NJ-T TD0804N
2L4	DCL811011	BLM21A121FPT TD0804N
2L11 to 2L14	DCL810811	HK1608 10NJ-T TD0804N
2Q1	DTR860161	2SK 508 K51 TE0804L
2Q2 to 2Q4	DTR830521	2SC 3583-T1B TE0804L
2Q5, 2Q6	DTR810041	2SA 1162Y TE85L
2Q7 to 2Q11	DTR890471	DTA114YK/RN2407 TE0804L
2Q12	DTR810041	2SA 1162Y TE85L
2Q14	DTR838661	2SC 2712LG TE85L
2Q15, 2Q16	DTR890581	DTC114YK/RN1407 TE0804L
2Q17, 2Q18	DTR810041	2SA 1162Y TE85L
2R1 to 2R10	DRZ820971	RN73G 2A 20ΩD TD0804N
2R11	DRZ833071	RK73H 2A 82ΩF TD0804N
2R12	DRZ833561	RK73H 2A 36ΩF TD0804N
2R13	DRZ832011	RK73H 2A 100ΩF TD0804N
2R14	DRZ831611	MCR10J 5R6E TD0804N
2R15 to 2R17	DRZ828721	RR1220P-224-B TD0804N
2R18	DRZ828731	RR1220P-244-B TD0804N
2R19	DRZ828711	RR1220P-114-B TD0804N
2R20	DRZ832261	RK73H 2A 1.1KΩF TD0804N
2R21	DRZ832081	RK73H 2A 200ΩF TD0804N
2R22	DRZ833581	RK73H 2A 43ΩF TD0804N
2R24	DRZ830861	MCR10J 300E TD0804N
2R25	DRZ833041	RK73H 2A 62ΩF TD0804N
2R26	DRZ828751	RR1220P-474-B TD0804N
2R27	DRZ828741	RR1220P-434-B TD0804N
2R28	DRZ828711	RR1220P-114-B TD0804N
2R29	DRZ832261	RK73H 2A 1.1KΩF TD0804N
2R30	DRZ832081	RK73H 2A 200ΩF TD0804N
2R31	DRZ833531	RK73H 2A 27ΩF TD0804N
2R32	DRZ831121	MCR10J 240E TD0804N
2R33	DRZ833581	RK73H 2A 43ΩF TD0804N
2R35 to 2R42	DRZ828761	RR1220P-204-D TD0804N
2R43	DRZ832121	RK73H 2A 300ΩF TD0804N
2R44	DRZ832011	RK73H 2A 100ΩF TD0804N
2R45	DRZ832031	RK73H 2A 120ΩF TD0804N
2R46, 2R47	DRZ831431	MCR10J 335E TD0804N
2R48	DRZ821291	RK73K 1J 150ΩJ TD0804N
2R49	DRZ820971	RN73G 2A 20ΩD TD0804N
2R50	DRZ832101	RK73H 2A 240ΩF TD0804N
2R51	DRZ830861	MCR10J 300E TD0804N
2R52	DDD089381	NTH5G20P35A221J07TE TE0804N
2R53	DRZ832531	RK73H 2A 15KΩF TD0804N
2R54	DRZ832251	RK73H 2A 1.0KΩF TD0804N
2R55	DRZ832441	RK73H 2A 6.2KΩF TD0804N
2R56	DRZ832251	RK73H 2A 1.0KΩF TD0804N

CH1 FRONT END 2

CIRCUIT REFERENCE	IWATSU PART NO.	DESCRIPTION
2R58	DRZ832051	RK73H 2A 150ΩF TD0804N
2R59	DRZ820971	RN73G 2A 20ΩD TD0804N
2R60 to 2R62	DRZ832201	RK73H 2A 620ΩF TD0804N
2R63	DRZ820971	RN73G 2A 20ΩD TD0804N
2R64 to 2R67	DRZ832091	RK73H 2A 220ΩF TD0804N
2R68	DRZ832601	RK73H 2A 30KΩF TD0804N
2R69	DRZ832401	RK73H 2A 4.3KΩF TD0804N
2R70	DRZ832281	RK73H 2A 1.3KΩF TD0804N
2R71	DRZ832031	RK73H 2A 120ΩF TD0804N
2R74, 2R75	DRZ828761	RR1220P-204-D TD0804N
2R76	DRZ828711	RR1220P-114-B TD0804N
2R77	DRZ832661	RK73H 2A 51KΩF TD0804N
2R78	DRV810251	G4AT/ST-4TA 5KΩ TE1208L
2R79	DRZ832011	RK73H 2A 100ΩF TD0804N
2R80	DRZ832251	RK73H 2A 1.0KΩF TD0804N
2R81, 2R82	DRZ820861	RN73F 2A 100KΩD TD0804N
2R83	DRZ832321	RK73H 2A 2.0KΩF TD0804N
2R84	DRZ832301	RK73H 2A 1.6KΩF TD0804N
2R85	DDD074121	LP310 1F 202F 302 TE0804N
2R86	DRZ832491	RK73H 2A 10KΩF TD0804N
2R87	DDD074121	LP310 1F 202F 302 TE0804N
2R88	DRZ832491	RK73H 2A 10KΩF TD0804N
2R89	DRZ832251	RK73H 2A 1.0KΩF TD0804N
2R90	DRZ832491	RK73H 2A 10KΩF TD0804N
2R91	DRZ828571	RN73F 2A 510ΩB TD0804N
2R92	DRZ833021	RK73H 2A 51ΩF TD0804N
2R93	DRZ833551	RK73H 2A 33ΩF TD0804N
2R95	DRZ833061	RK73H 2A 75ΩF TD0804N
2R97	DRZ832291	RK73H 2A 1.5KΩF TD0804N
2R98	DRZ832471	RK73H 2A 8.2KΩF TD0804N
2R100	DRZ832301	RK73H 2A 1.6KΩF TD0804N
2R101	DRZ832191	RK73H 2A 560ΩF TD0804N
2R105	DRZ832351	RK73H 2A 2.7KΩF TD0804N
2R106	DRZ832191	RK73H 2A 560ΩF TD0804N
2R107	DRZ832351	RK73H 2A 2.7KΩF TD0804N
2R108	DRZ832191	RK73H 2A 560ΩF TD0804N
2R109	DRZ832011	RK73H 2A 100ΩF TD0804N
2R110	DRZ832321	RK73H 2A 2.0KΩF TD0804N
2R115, 2R116	DRZ833021	RK73H 2A 51ΩF TD0804N
2R120	DRZ832251	RK73H 2A 1.0KΩF TD0804N
2R123 to 2R125	DRZ832011	RK73H 2A 100ΩF TD0804N
2R126	DRZ832251	RK73H 2A 1.0KΩF TD0804N
2R127	DRZ832391	RK73H 2A 3.9KΩF TD0804N
2R128	DRZ832121	RK73H 2A 300ΩF TD0804N
2R129	DRZ832251	RK73H 2A 1.0KΩF TD0804N
2R130	DRZ832391	RK73H 2A 3.9KΩF TD0804N
2R131	DRZ832121	RK73H 2A 300ΩF TD0804N
2RL1, 2RL2	DKD028511	NAS-5W-K-TN-B05 TE2416B
2RL3, 2RL4	DKD030381	NASL-5W-K-TN TE2416B
2RL5	DKD028511	NAS-5W-K-TN-B05 TE2416B

CH2 FRONT END 3

CIRCUIT REFERENCE	IWATSU PART NO.	DESCRIPTION
3C1, 3C2	DCC816471	C2012CH 1H 080D A TD84N
3C3, 3C4	DCC850101	GRM42-6CH 050C500PT TE0804N
3C6	DCV819091	TZBX4 Z250BA110 TE1208R
3C7	DCC816521	C2012CH 1H 220J A TD84N
3C10	DCC850101	GRM42-6CH 050C500PT TE0804N
3C12	DCV819091	TZBX4 Z250BA110 TE1208R
3C13	DCC816521	C2012CH 1H 220J A TD84N
3C14	DCC816451	C2012CH 1H 060D A TD84N
3C15	DCC816381	C2012CH 1H 020C A TD84N
3C18	DCC816491	C2012CH 1H 100D A TD84N
3C19	DCC810511	C2012F 1H 103Z A TD84N
3C20	DCC840041	GHM1530B 473K250 TE0804N
3C21	DCC850011	GRM42-6 W5R 222K500 TE0804N
3C22	DCC850091	GRM42-6CH 020C500PT TE0804N
3C24	DCC816371	C2012CH 1H 1R5C A TD84N
3C25	DCV819051	TZBX4 Z030BA110 TE1208R
3C26	DCC811731	C1608B 1H 102K A TD0804N
3C27 to 3C29	DCC810511	C2012F 1H 103Z A TD84N
3C32 to 3C35	DCC810511	C2012F 1H 103Z A TD84N
3C36	DCC810571	C2012F 1H 104Z A TD0804N
3C37	DCC816451	C2012CH 1H 060D A TD84N
3C39	DCC816601	C2012CH 1H 101J A TD84N
3C40	DCC810571	C2012F 1H 104Z A TD0804N
3C41	DCC810981	C2012B 1H 153K A TD84N
3C42	DCC811161	C2012B 1H 333K A TD84N
3C43 to 3C46	DCC810511	C2012F 1H 103Z A TD84N
3C47	DCC811161	C2012B 1H 333K A TD84N
3C48	DCV819051	TZBX4 Z030BA110 TE1208R
3C49	DCC810511	C2012F 1H 103Z A TD84N
3C50	DCE919141	SRA 10VB-100 TC04R
3C51 to 3C53	DCC810511	C2012F 1H 103Z A TD84N
3C54, 3C55	DCC810571	C2012F 1H 104Z A TD0804N
3C58	DCC820021	C2012F 1C 105Z A TD84N
3C59, 3C60	DCC810511	C2012F 1H 103Z A TD84N
3C70 to 3C74	DCC816801	C2012CH 1H 102J A TD84N
3C75, 3C76	DCC820251	C2012B 1C 474K A TD0804N
3C80	DCC810571	C2012F 1H 104Z A TD0804N
3C81	DCC816371	C2012CH 1H 1R5C A TD84N
3C83 to 3C86	DCC820021	C2012F 1C 105Z A TD84N
3C87	DCC810511	C2012F 1H 103Z A TD84N
3C90 to 3C96	DCC810511	C2012F 1H 103Z A TD84N
3C99	DCC819091	GRM42-6B 106K6.3PT TE0804N
3D1, 3D2	DDD810461	HSM 124S-JTL TE0804L
3D3	DDD810081	1SS 226 (TE85L) TE0804L
3D4 to 3D6	DDD810241	1SS 272 TE0804R
3D7 to 3D9	DDD810461	HSM 124S-JTL TE0804L
3D10, 3D11	DDD810241	1SS 272 TE0804R
3FL1 to 3FL7	DCL870041	NFM39R12C222T1 TE0804N
3IC1	DIC614811	LT 1097S8-T2 TE1208B
3IC2	DIC619191	NJM 082M(TE3) TE1208L
3IC3	DIC614891	HFE428 1GHZ FRONT END
3IC4	DIC631231	HTR420 TRIGGER COMPARATOR
3IC5	DIC483321	74HC595F/AF TE1612B

CH2 FRONT END [3]

CIRCUIT REFERENCE	IWATSU PART NO.	DESCRIPTION
3IC6	DIC619271	TA 75S558F (TE85L) TE0804L
3J1A	DCN126091	7093XXP01 PROBUS CONNECTOR
3J1B	DCN045681	CONNECTOR BNC-BR-PC-1
3L1	DCL810831	HK1608 18NJ-T TD0804N
3L2	DCL811011	BLM21A121FPT TD0804N
3L3	DCL810811	HK1608 10NJ-T TD0804N
3L4	DCL811011	BLM21A121FPT TD0804N
3L11 to 3L14	DCL810811	HK1608 10NJ-T TD0804N
3L15 to 3L18	DRZ831801	MCR03 EZH J000E TD0804N
3Q1	DTR860161	2SK 508 K51 TE0804L
3Q2 to 3Q4	DTR830521	2SC 3583-T1B TE0804L
3Q5, 3Q6	DTR810041	2SA 1162Y TE85L
3Q7 to 3Q11	DTR890471	DTA114YK/RN2407 TE0804L
3Q12	DTR810041	2SA 1162Y TE85L
3Q14	DTR838661	2SC 2712LG TE85L
3Q15, 3Q16	DTR890581	DTC114YK/RN1407 TE0804L
3Q17, 3Q18	DTR810041	2SA 1162Y TE85L
3R1 to 3R10	DRZ820971	RN73G 2A 20ΩD TD0804N
3R11	DRZ833071	RK73H 2A 82ΩF TD0804N
3R12	DRZ833561	RK73H 2A 36ΩF TD0804N
3R13	DRZ832011	RK73H 2A 100ΩF TD0804N
3R15 to 3R17	DRZ828721	RR1220P-224-B TD0804N
3R18	DRZ828731	RR1220P-244-B TD0804N
3R19	DRZ828711	RR1220P-114-B TD0804N
3R20	DRZ832261	RK73H 2A 1.1KΩF TD0804N
3R21	DRZ832081	RK73H 2A 200ΩF TD0804N
3R22	DRZ833581	RK73H 2A 43ΩF TD0804N
3R24	DRZ830861	MCR10J 300E TD0804N
3R25	DRZ833041	RK73H 2A 62ΩF TD0804N
3R26	DRZ828751	RR1220P-474-B TD0804N
3R27	DRZ828741	RR1220P-434-B TD0804N
3R28	DRZ828711	RR1220P-114-B TD0804N
3R29	DRZ832261	RK73H 2A 1.1KΩF TD0804N
3R30	DRZ832081	RK73H 2A 200ΩF TD0804N
3R31	DRZ833531	RK73H 2A 27ΩF TD0804N
3R32	DRZ831121	MCR10J 240E TD0804N
3R33	DRZ833581	RK73H 2A 43ΩF TD0804N
3R35 to 3R42	DRZ828761	RR1220P-204-D TD0804N
3R43	DRZ832121	RK73H 2A 300ΩF TD0804N
3R44	DRZ832011	RK73H 2A 100ΩF TD0804N
3R45	DRZ832031	RK73H 2A 120ΩF TD0804N
3R46, 3R47	DRZ831431	MCR10J 335E TD0804N
3R48	DRZ821291	RK73K 1J 150ΩJ TD0804N
3R49	DRZ820971	RN73G 2A 20ΩD TD0804N
3R50	DRZ832101	RK73H 2A 240ΩF TD0804N
3R51	DRZ830861	MCR10J 300E TD0804N
3R52	DDD089381	NTH5G20P35A221J07TE TE0804N
3R53	DRZ832531	RK73H 2A 15KΩF TD0804N
3R54	DRZ832251	RK73H 2A 1.0KΩF TD0804N
3R55	DRZ832441	RK73H 2A 6.2KΩF TD0804N
3R56	DRZ832251	RK73H 2A 1.0KΩF TD0804N
3R58	DRZ832051	RK73H 2A 150ΩF TD0804N

CH2 FRONT END [3]

CIRCUIT REFERENCE	IWATSU PART NO.	DESCRIPTION
3R59	DRZ820971	RN73G 2A 20ΩD TD0804N
3R60 to 3R62	DRZ832201	RK73H 2A 620ΩF TD0804N
3R63	DRZ820971	RN73G 2A 20ΩD TD0804N
3R64 to 3R67	DRZ832091	RK73H 2A 220ΩF TD0804N
3R68	DRZ832601	RK73H 2A 30KΩF TD0804N
3R69	DRZ832401	RK73H 2A 4.3KΩF TD0804N
3R70	DRZ832281	RK73H 2A 1.3KΩF TD0804N
3R71	DRZ832031	RK73H 2A 120ΩF TD0804N
3R74, 3R75	DRZ828761	RR1220P-204-D TD0804N
3R76	DRZ828711	RR1220P-114-B TD0804N
3R77	DRZ832661	RK73H 2A 51KΩF TD0804N
3R78	DRV810251	G4AT/ST-4TA 5KΩ TE1208L
3R79	DRZ832011	RK73H 2A 100ΩF TD0804N
3R80	DRZ832251	RK73H 2A 1.0KΩF TD0804N
3R81, 3R82	DRZ820861	RN73F 2A 100KΩD TD0804N
3R83	DRZ832321	RK73H 2A 2.0KΩF TD0804N
3R84	DRZ832301	RK73H 2A 1.6KΩF TD0804N
3R85	DDD074121	LP310 1F 202F 302 TE0804N
3R86	DRZ832491	RK73H 2A 10KΩF TD0804N
3R87	DDD074121	LP310 1F 202F 302 TE0804N
3R88	DRZ832491	RK73H 2A 10KΩF TD0804N
3R89	DRZ832251	RK73H 2A 1.0KΩF TD0804N
3R90	DRZ832491	RK73H 2A 10KΩF TD0804N
3R91	DRZ828571	RN73F 2A 510ΩB TD0804N
3R92	DRZ833021	RK73H 2A 51ΩF TD0804N
3R93	DRZ833551	RK73H 2A 33ΩF TD0804N
3R95	DRZ833061	RK73H 2A 75ΩF TD0804N
3R97	DRZ832291	RK73H 2A 1.5KΩF TD0804N
3R98	DRZ832471	RK73H 2A 8.2KΩF TD0804N
3R100	DRZ832301	RK73H 2A 1.6KΩF TD0804N
3R101	DRZ832191	RK73H 2A 560ΩF TD0804N
3R105	DRZ832351	RK73H 2A 2.7KΩF TD0804N
3R106	DRZ832191	RK73H 2A 560ΩF TD0804N
3R107	DRZ832351	RK73H 2A 2.7KΩF TD0804N
3R108	DRZ832191	RK73H 2A 560ΩF TD0804N
3R109	DRZ832011	RK73H 2A 100ΩF TD0804N
3R110	DRZ832321	RK73H 2A 2.0KΩF TD0804N
3R120	DRZ832251	RK73H 2A 1.0KΩF TD0804N
3R123 to 3R125	DRZ832011	RK73H 2A 100ΩF TD0804N
3R126	DRZ832251	RK73H 2A 1.0KΩF TD0804N
3R127	DRZ832391	RK73H 2A 3.9KΩF TD0804N
3R128	DRZ832121	RK73H 2A 300ΩF TD0804N
3R129	DRZ832251	RK73H 2A 1.0KΩF TD0804N
3R130	DRZ832391	RK73H 2A 3.9KΩF TD0804N
3R131	DRZ832121	RK73H 2A 300ΩF TD0804N
3RL1, 3RL2	DKD028511	NAS-5W-K-TN-B05 TE2416B
3RL3, 3RL4	DKD030381	NASL-5W-K-TN TE2416B
3RL5	DKD028511	NAS-5W-K-TN-B05 TE2416B

CH3 FRONT END 4

CIRCUIT REFERENCE	IWATSU PART NO.	DESCRIPTION
4C1, 4C2	DCC816471	C2012CH 1H 080D A TD84N
4C3, 4C4	DCC850101	GRM42-6CH 050C500PT TE0804N
4C6	DCV819091	TZBX4 Z250BA110 TE1208R
4C7	DCC816521	C2012CH 1H 220J A TD84N
4C10	DCC850101	GRM42-6CH 050C500PT TE0804N
4C12	DCV819091	TZBX4 Z250BA110 TE1208R
4C13	DCC816521	C2012CH 1H 220J A TD84N
4C14	DCC816451	C2012CH 1H 060D A TD84N
4C15	DCC816381	C2012CH 1H 020C A TD84N
4C18	DCC816491	C2012CH 1H 100D A TD84N
4C19	DCC810511	C2012F 1H 103Z A TD84N
4C20	DCC840041	GHM1530B 473K250 TE0804N
4C21	DCC850011	GRM42-6 W5R 222K500 TE0804N
4C22	DCC850091	GRM42-6CH 020C500PT TE0804N
4C24	DCC816371	C2012CH 1H 1R5C A TD84N
4C25	DCV819051	TZBX4 Z030BA110 TE1208R
4C26	DCC811731	C1608B 1H 102K A TD0804N
4C27 to 4C29	DCC810511	C2012F 1H 103Z A TD84N
4C32 to 4C35	DCC810511	C2012F 1H 103Z A TD84N
4C36	DCC810571	C2012F 1H 104Z A TD0804N
4C37	DCC816451	C2012CH 1H 060D A TD84N
4C39	DCC816601	C2012CH 1H 101J A TD84N
4C40	DCC810571	C2012F 1H 104Z A TD0804N
4C41	DCC810981	C2012B 1H 153K A TD84N
4C42	DCC811161	C2012B 1H 333K A TD84N
4C43 to 4C46	DCC810511	C2012F 1H 103Z A TD84N
4C47	DCC811161	C2012B 1H 333K A TD84N
4C48	DCV819051	TZBX4 Z030BA110 TE1208R
4C49	DCC810511	C2012F 1H 103Z A TD84N
4C50	DCE919141	SRA 10VB-100 TC04R
4C51 to 4C53	DCC810511	C2012F 1H 103Z A TD84N
4C54, 4C55	DCC810571	C2012F 1H 104Z A TD0804N
4C58	DCC820021	C2012F 1C 105Z A TD84N
4C59, 4C60	DCC810511	C2012F 1H 103Z A TD84N
4C70 to 4C74	DCC816801	C2012CH 1H 102J A TD84N
4C75, 4C76	DCC820251	C2012B 1C 474K A TD0804N
4C80	DCC810571	C2012F 1H 104Z A TD0804N
4C81	DCC816371	C2012CH 1H 1R5C A TD84N
4C83 to 4C86	DCC820021	C2012F 1C 105Z A TD84N
4C87	DCC810511	C2012F 1H 103Z A TD84N
4C90 to 4C96	DCC810511	C2012F 1H 103Z A TD84N
4C99	DCC819091	GRM42-6B 106K6.3PT TE0804N
4D1, 4D2	DDD810461	HSM 124S-JTL TE0804L
4D3	DDD810081	1SS 226 (TE85L) TE0804L
4D4 to 4D6	DDD810241	1SS 272 TE0804R
4D7 to 4D9	DDD810461	HSM 124S-JTL TE0804L
4D10, 4D11	DDD810241	1SS 272 TE0804R
4FL1 to 4FL7	DCL870041	NFM39R12C222T1 TE0804N
4IC1	DIC614811	LT 1097S8-T2 TE1208B
4IC2	DIC619191	NJM 082M(TE3) TE1208L
4IC3	DIC614891	HFE428 1GHZ FRONT END
4IC4	DIC631231	HTR420 TRIGGER COMPARATOR
4IC5	DIC483321	74HC595F/AF TE1612B

CH3 FRONT END 4

CIRCUIT REFERENCE	IWATSU PART NO.	DESCRIPTION
4IC6	DIC619271	TA 75S558F (TE85L) TE0804L
4J1A	DCN126091	7093XXP01 PROBUS CONNECTOR
4J1B	DCN045681	CONNECTOR BNC-BR-PC-1
4L1	DCL810831	HK1608 18NJ-T TD0804N
4L2	DCL811011	BLM21A121FPT TD0804N
4L3	DCL810811	HK1608 10NJ-T TD0804N
4L4	DCL811011	BLM21A121FPT TD0804N
4L11 to 4L14	DCL810811	HK1608 10NJ-T TD0804N
4L15 to 4L18	DRZ831801	MCR03 EZH J000E TD0804N
4Q1	DTR860161	2SK 508 K51 TE0804L
4Q2 to 4Q4	DTR830521	2SC 3583-T1B TE0804L
4Q5, 4Q6	DTR810041	2SA 1162Y TE85L
4Q7 to 4Q11	DTR890471	DTA114YK/RN2407 TE0804L
4Q12	DTR810041	2SA 1162Y TE85L
4Q14	DTR838661	2SC 2712LG TE85L
4Q15, 4Q16	DTR890581	DTC114YK/RN1407 TE0804L
4Q17, 4Q18	DTR810041	2SA 1162Y TE85L
4R1 to 4R10	DRZ820971	RN73G 2A 20ΩD TD0804N
4R11	DRZ833071	RK73H 2A 82ΩF TD0804N
4R12	DRZ833561	RK73H 2A 36ΩF TD0804N
4R13	DRZ832011	RK73H 2A 100ΩF TD0804N
4R14	DRZ831611	MCR10J 5R6E TD0804N
4R15 to 4R17	DRZ828721	RR1220P-224-B TD0804N
4R18	DRZ828731	RR1220P-244-B TD0804N
4R19	DRZ828711	RR1220P-114-B TD0804N
4R20	DRZ832261	RK73H 2A 1.1KΩF TD0804N
4R21	DRZ832081	RK73H 2A 200ΩF TD0804N
4R22	DRZ833581	RK73H 2A 43ΩF TD0804N
4R24	DRZ830861	MCR10J 300E TD0804N
4R25	DRZ833041	RK73H 2A 62ΩF TD0804N
4R26	DRZ828751	RR1220P-474-B TD0804N
4R27	DRZ828741	RR1220P-434-B TD0804N
4R28	DRZ828711	RR1220P-114-B TD0804N
4R29	DRZ832261	RK73H 2A 1.1KΩF TD0804N
4R30	DRZ832081	RK73H 2A 200ΩF TD0804N
4R31	DRZ833531	RK73H 2A 27ΩF TD0804N
4R32	DRZ831121	MCR10J 240E TD0804N
4R33	DRZ833581	RK73H 2A 43ΩF TD0804N
4R35 to 4R42	DRZ828761	RR1220P-204-D TD0804N
4R43	DRZ832121	RK73H 2A 300ΩF TD0804N
4R44	DRZ832011	RK73H 2A 100ΩF TD0804N
4R45	DRZ832031	RK73H 2A 120ΩF TD0804N
4R46, 4R47	DRZ831431	MCR10J 335E TD0804N
4R48	DRZ821291	RK73K 1J 150ΩJ TD0804N
4R49	DRZ820971	RN73G 2A 20ΩD TD0804N
4R50	DRZ832101	RK73H 2A 240ΩF TD0804N
4R51	DRZ830861	MCR10J 300E TD0804N
4R52	DDD089381	NTH5G20P35A221J07TE TE0804N
4R53	DRZ832531	RK73H 2A 15KΩF TD0804N
4R54	DRZ832251	RK73H 2A 1.0KΩF TD0804N
4R55	DRZ832441	RK73H 2A 6.2KΩF TD0804N
4R56	DRZ832251	RK73H 2A 1.0KΩF TD0804N
4R58	DRZ832051	RK73H 2A 150ΩF TD0804N

CH3 FRONT END 4

CIRCUIT REFERENCE	IWATSU PART NO.	DESCRIPTION
4R59	DRZ820971	RN73G 2A 20ΩD TD0804N
4R60 to 4R62	DRZ832201	RK73H 2A 620ΩF TD0804N
4R63	DRZ820971	RN73G 2A 20ΩD TD0804N
4R64 to 4R67	DRZ832091	RK73H 2A 220ΩF TD0804N
4R68	DRZ832601	RK73H 2A 30KΩF TD0804N
4R69	DRZ832401	RK73H 2A 4.3KΩF TD0804N
4R70	DRZ832281	RK73H 2A 1.3KΩF TD0804N
4R71	DRZ832031	RK73H 2A 120ΩF TD0804N
4R74, 4R75	DRZ828761	RR1220P-204-D TD0804N
4R76	DRZ828711	RR1220P-114-B TD0804N
4R77	DRZ832661	RK73H 2A 51KΩF TD0804N
4R78	DRV810251	G4AT/ST-4TA 5KΩ TE1208L
4R79	DRZ832011	RK73H 2A 100ΩF TD0804N
4R80	DRZ832251	RK73H 2A 1.0KΩF TD0804N
4R81, 4R82	DRZ820861	RN73F 2A 100KΩD TD0804N
4R83	DRZ832321	RK73H 2A 2.0KΩF TD0804N
4R84	DRZ832301	RK73H 2A 1.6KΩF TD0804N
4R85	DDD074121	LP310 1F 202F 302 TE0804N
4R86	DRZ832491	RK73H 2A 10KΩF TD0804N
4R87	DDD074121	LP310 1F 202F 302 TE0804N
4R88	DRZ832491	RK73H 2A 10KΩF TD0804N
4R89	DRZ832251	RK73H 2A 1.0KΩF TD0804N
4R90	DRZ832491	RK73H 2A 10KΩF TD0804N
4R91	DRZ828571	RN73F 2A 510ΩB TD0804N
4R92	DRZ833021	RK73H 2A 51ΩF TD0804N
4R93	DRZ833551	RK73H 2A 33ΩF TD0804N
4R95	DRZ833061	RK73H 2A 75ΩF TD0804N
4R97	DRZ832291	RK73H 2A 1.5KΩF TD0804N
4R98	DRZ832471	RK73H 2A 8.2KΩF TD0804N
4R100	DRZ832301	RK73H 2A 1.6KΩF TD0804N
4R101	DRZ832191	RK73H 2A 560ΩF TD0804N
4R105	DRZ832351	RK73H 2A 2.7KΩF TD0804N
4R106	DRZ832191	RK73H 2A 560ΩF TD0804N
4R107	DRZ832351	RK73H 2A 2.7KΩF TD0804N
4R108	DRZ832191	RK73H 2A 560ΩF TD0804N
4R109	DRZ832011	RK73H 2A 100ΩF TD0804N
4R110	DRZ832321	RK73H 2A 2.0KΩF TD0804N
4R120	DRZ832251	RK73H 2A 1.0KΩF TD0804N
4R123 to 4R125	DRZ832011	RK73H 2A 100ΩF TD0804N
4R126	DRZ832251	RK73H 2A 1.0KΩF TD0804N
4R127	DRZ832391	RK73H 2A 3.9KΩF TD0804N
4R128	DRZ832121	RK73H 2A 300ΩF TD0804N
4R129	DRZ832251	RK73H 2A 1.0KΩF TD0804N
4R130	DRZ832391	RK73H 2A 3.9KΩF TD0804N
4R131	DRZ832121	RK73H 2A 300ΩF TD0804N
4RL1, 4RL2	DKD028511	NAS-5W-K-TN-B05 TE2416B
4RL3, 4RL4	DKD030381	NASL-5W-K-TN TE2416B
4RL5	DKD028511	NAS-5W-K-TN-B05 TE2416B

CH4 FRONT END 5

CIRCUIT REFERENCE	IWATSU PART NO.	DESCRIPTION
5C1, 5C2	DCC816471	C2012CH 1H 080D A TD84N
5C3, 5C4	DCC850101	GRM42-6CH 050C500PT TE0804N
5C6	DCV819091	TZBX4 Z250BA110 TE1208R
5C7	DCC816521	C2012CH 1H 220J A TD84N
5C10	DCC850101	GRM42-6CH 050C500PT TE0804N
5C12	DCV819091	TZBX4 Z250BA110 TE1208R
5C13	DCC816521	C2012CH 1H 220J A TD84N
5C14	DCC816451	C2012CH 1H 060D A TD84N
5C15	DCC816381	C2012CH 1H 020C A TD84N
5C18	DCC816491	C2012CH 1H 100D A TD84N
5C19	DCC810511	C2012F 1H 103Z A TD84N
5C20	DCC840041	GHM1530B 473K250 TE0804N
5C21	DCC850011	GRM42-6 W5R 222K500 TE0804N
5C22	DCC850091	GRM42-6CH 020C500PT TE0804N
5C24	DCC816371	C2012CH 1H 1R5C A TD84N
5C25	DCV819051	TZBX4 Z030BA110 TE1208R
5C26	DCC811731	C1608B 1H 102K A TD0804N
5C27 to 5C29	DCC810511	C2012F 1H 103Z A TD84N
5C32 to 5C35	DCC810511	C2012F 1H 103Z A TD84N
5C36	DCC810571	C2012F 1H 104Z A TD0804N
5C37	DCC816451	C2012CH 1H 060D A TD84N
5C39	DCC816601	C2012CH 1H 101J A TD84N
5C40	DCC810571	C2012F 1H 104Z A TD0804N
5C41	DCC810981	C2012B 1H 153K A TD84N
5C42	DCC811161	C2012B 1H 333K A TD84N
5C43 to 5C46	DCC810511	C2012F 1H 103Z A TD84N
5C47	DCC811161	C2012B 1H 333K A TD84N
5C48	DCV819051	TZBX4 Z030BA110 TE1208R
5C49	DCC810511	C2012F 1H 103Z A TD84N
5C50	DCE919141	SRA 10VB-100 TC04R
5C51 to 5C53	DCC810511	C2012F 1H 103Z A TD84N
5C54, 5C55	DCC810571	C2012F 1H 104Z A TD0804N
5C58	DCC820021	C2012F 1C 105Z A TD84N
5C59, 5C60	DCC810511	C2012F 1H 103Z A TD84N
5C70 to 5C74	DCC816801	C2012CH 1H 102J A TD84N
5C75, 5C76	DCC820251	C2012B 1C 474K A TD0804N
5C80	DCC810571	C2012F 1H 104Z A TD0804N
5C81	DCC816371	C2012CH 1H 1R5C A TD84N
5C83 to 5C86	DCC820021	C2012F 1C 105Z A TD84N
5C87	DCC810511	C2012F 1H 103Z A TD84N
5C90 to 5C96	DCC810511	C2012F 1H 103Z A TD84N
5C99	DCC819091	GRM42-6B 106K6.3PT TE0804N
5D1, 5D2	DDD810461	HSM 124S-JTL TE0804L
5D3	DDD810081	1SS 226 (TE85L) TE0804L
5D4 to 5D6	DDD810241	1SS 272 TE0804R
5D7 to 5D9	DDD810461	HSM 124S-JTL TE0804L
5D10, 5D11	DDD810241	1SS 272 TE0804R
5FL1 to 5FL7	DCL870041	NFM39R12C222T1 TE0804N
5IC1	DIC614811	LT 1097S8-T2 TE1208B
5IC2	DIC619191	NJM 082M(TE3) TE1208L
5IC3	DIC614891	HFE428 1GHZ FRONT END
5IC4	DIC631231	HTR420 TRIGGER COMPARATOR

CH4 FRONT END 5

CIRCUIT REFERENCE	IWATSU PART NO.	DESCRIPTION
5IC5	DIC483321	74HC595F/AF TE1612B
5IC6	DIC619271	TA 75S558F (TE85L) TE0804L
5J1A	DCN126091	7093XXP01 PROBUS CONNECTOR
5J1B	DCN045681	CONNECTOR BNC-BR-PC-1
5L1	DCL810831	HK1608 18NJ-T TD0804N
5L2	DCL811011	BLM21A121FPT TD0804N
5L3	DCL810811	HK1608 10NJ-T TD0804N
5L4	DCL811011	BLM21A121FPT TD0804N
5L11 to 5L14	DCL810811	HK1608 10NJ-T TD0804N
5Q1	DTR860161	2SK 508 K51 TE0804L
5Q2 to 5Q4	DTR830521	2SC 3583-T1B TE0804L
5Q5, 5Q6	DTR810041	2SA 1162Y TE85L
5Q7 to 5Q11	DTR890471	DTA114YK/RN2407 TE0804L
5Q12	DTR810041	2SA 1162Y TE85L
5Q14	DTR838661	2SC 2712LG TE85L
5Q15, 5Q16	DTR890581	DTC114YK/RN1407 TE0804L
5Q17, 5Q18	DTR810041	2SA 1162Y TE85L
5R1 to 5R10	DRZ820971	RN73G 2A 20ΩD TD0804N
5R11	DRZ833071	RK73H 2A 82ΩF TD0804N
5R12	DRZ833561	RK73H 2A 36ΩF TD0804N
5R13	DRZ832011	RK73H 2A 100ΩF TD0804N
5R14	DRZ831611	MCR10J 5R6E TD0804N
5R15 to 5R17	DRZ828721	RR1220P-224-B TD0804N
5R18	DRZ828731	RR1220P-244-B TD0804N
5R19	DRZ828711	RR1220P-114-B TD0804N
5R20	DRZ832261	RK73H 2A 1.1KΩF TD0804N
5R21	DRZ832081	RK73H 2A 200ΩF TD0804N
5R22	DRZ833581	RK73H 2A 43ΩF TD0804N
5R24	DRZ830861	MCR10J 300E TD0804N
5R25	DRZ833041	RK73H 2A 62ΩF TD0804N
5R26	DRZ828751	RR1220P-474-B TD0804N
5R27	DRZ828741	RR1220P-434-B TD0804N
5R28	DRZ828711	RR1220P-114-B TD0804N
5R29	DRZ832261	RK73H 2A 1.1KΩF TD0804N
5R30	DRZ832081	RK73H 2A 200ΩF TD0804N
5R31	DRZ833531	RK73H 2A 27ΩF TD0804N
5R32	DRZ831121	MCR10J 240E TD0804N
5R33	DRZ833581	RK73H 2A 43ΩF TD0804N
5R35 to 5R42	DRZ828761	RR1220P-204-D TD0804N
5R43	DRZ832121	RK73H 2A 300ΩF TD0804N
5R44	DRZ832011	RK73H 2A 100ΩF TD0804N
5R45	DRZ832031	RK73H 2A 120ΩF TD0804N
5R46, 5R47	DRZ831431	MCR10J 335E TD0804N
5R48	DRZ821291	RK73K 1J 150ΩJ TD0804N
5R49	DRZ820971	RN73G 2A 20ΩD TD0804N
5R50	DRZ832101	RK73H 2A 240ΩF TD0804N
5R51	DRZ830861	MCR10J 300E TD0804N
5R52	DDD089381	NTH5G20P35A221J07TE TE0804N
5R53	DRZ832531	RK73H 2A 15KΩF TD0804N
5R54	DRZ832251	RK73H 2A 1.0KΩF TD0804N
5R55	DRZ832441	RK73H 2A 6.2KΩF TD0804N
5R56	DRZ832251	RK73H 2A 1.0KΩF TD0804N
5R58	DRZ832051	RK73H 2A 150ΩF TD0804N

CH4 FRONT END 5

CIRCUIT REFERENCE	IWATSU PART NO.	DESCRIPTION
5R59	DRZ820971	RN73G 2A 20ΩD TD0804N
5R60 to 5R62	DRZ832201	RK73H 2A 620ΩF TD0804N
5R63	DRZ820971	RN73G 2A 20ΩD TD0804N
5R64 to 5R67	DRZ832091	RK73H 2A 220ΩF TD0804N
5R68	DRZ832601	RK73H 2A 30KΩF TD0804N
5R69	DRZ832401	RK73H 2A 4.3KΩF TD0804N
5R70	DRZ832281	RK73H 2A 1.3KΩF TD0804N
5R71	DRZ832031	RK73H 2A 120ΩF TD0804N
5R74, 5R75	DRZ828761	RR1220P-204-D TD0804N
5R76	DRZ828711	RR1220P-114-B TD0804N
5R77	DRZ832661	RK73H 2A 51KΩF TD0804N
5R78	DRV810251	G4AT/ST-4TA 5KΩ TE1208L
5R79	DRZ832011	RK73H 2A 100ΩF TD0804N
5R80	DRZ832251	RK73H 2A 1.0KΩF TD0804N
5R81, 5R82	DRZ820861	RN73F 2A 100KΩD TD0804N
5R83	DRZ832321	RK73H 2A 2.0KΩF TD0804N
5R84	DRZ832301	RK73H 2A 1.6KΩF TD0804N
5R85	DDD074121	LP310 1F 202F 302 TE0804N
5R86	DRZ832491	RK73H 2A 10KΩF TD0804N
5R87	DDD074121	LP310 1F 202F 302 TE0804N
5R88	DRZ832491	RK73H 2A 10KΩF TD0804N
5R89	DRZ832251	RK73H 2A 1.0KΩF TD0804N
5R90	DRZ832491	RK73H 2A 10KΩF TD0804N
5R91	DRZ828571	RN73F 2A 510ΩB TD0804N
5R92	DRZ833021	RK73H 2A 51ΩF TD0804N
5R93	DRZ833551	RK73H 2A 33ΩF TD0804N
5R95	DRZ833061	RK73H 2A 75ΩF TD0804N
5R97	DRZ832291	RK73H 2A 1.5KΩF TD0804N
5R98	DRZ832471	RK73H 2A 8.2KΩF TD0804N
5R100	DRZ832301	RK73H 2A 1.6KΩF TD0804N
5R101	DRZ832191	RK73H 2A 560ΩF TD0804N
5R105	DRZ832351	RK73H 2A 2.7KΩF TD0804N
5R106	DRZ832191	RK73H 2A 560ΩF TD0804N
5R107	DRZ832351	RK73H 2A 2.7KΩF TD0804N
5R108	DRZ832191	RK73H 2A 560ΩF TD0804N
5R109	DRZ832011	RK73H 2A 100ΩF TD0804N
5R110	DRZ832321	RK73H 2A 2.0KΩF TD0804N
5R115, 5R116	DRZ833021	RK73H 2A 51ΩF TD0804N
5R120	DRZ832251	RK73H 2A 1.0KΩF TD0804N
5R123 to 5R125	DRZ832011	RK73H 2A 100ΩF TD0804N
5R126	DRZ832251	RK73H 2A 1.0KΩF TD0804N
5R127	DRZ832391	RK73H 2A 3.9KΩF TD0804N
5R128	DRZ832121	RK73H 2A 300ΩF TD0804N
5R129	DRZ832251	RK73H 2A 1.0KΩF TD0804N
5R130	DRZ832391	RK73H 2A 3.9KΩF TD0804N
5R131	DRZ832121	RK73H 2A 300ΩF TD0804N
5RL1, 5RL2	DKD028511	NAS-5W-K-TN-B05 TE2416B
5RL3, 5RL4	DKD030381	NASL-5W-K-TN TE2416B
5RL5	DKD028511	NAS-5W-K-TN-B05 TE2416B

EXT TRIGGER 6

CIRCUIT REFERENCE	IWATSU PART NO.	DESCRIPTION
6C1	DCC816451	C2012CH 1H 060D A TD84N
6C2	DCC816491	C2012CH 1H 100D A TD84N
6C3, 6C4	DCC850101	GRM42-6CH 050C500PT TE0804N
6C5	DCC816401	C2012CH 1H 030C A TD84N
6C6	DCV819091	TZBX4 Z250BA110 TE1208R
6C7	DCC816531	C2012CH 1H 270J A TD84N
6C18	DCC816491	C2012CH 1H 100D A TD84N
6C19	DCC810511	C2012F 1H 103Z A TD84N
6C21	DCC850011	GRM42-6 W5R 222K500 TE0804N
6C22	DCC850091	GRM42-6CH 020C500PT TE0804N
6C24	DCC816381	C2012CH 1H 020C A TD84N
6C25	DCV819051	TZBX4 Z030BA110 TE1208R
6C26	DCC816801	C2012CH 1H 102J A TD84N
6C27 to 6C29	DCC810511	C2012F 1H 103Z A TD84N
6C32 to 6C34	DCC810511	C2012F 1H 103Z A TD84N
6C36	DCC810511	C2012F 1H 103Z A TD84N
6C37	DCC816801	C2012CH 1H 102J A TD84N
6C39	DCC816601	C2012CH 1H 101J A TD84N
6C40	DCC810571	C2012F 1H 104Z A TD0804N
6C41	DCC810981	C2012B 1H 153K A TD84N
6C42	DCC811161	C2012B 1H 333K A TD84N
6C43, 6C44	DCC810511	C2012F 1H 103Z A TD84N
6C47	DCC820021	C2012F 1C 105Z A TD84N
6C50	DCE919141	SRA 10VB-100 TC04R
6C51 to 6C53	DCC810511	C2012F 1H 103Z A TD84N
6C54, 6C55	DCC810571	C2012F 1H 104Z A TD0804N
6C58	DCC820021	C2012F 1C 105Z A TD84N
6C59 to 6C64	DCC810511	C2012F 1H 103Z A TD84N
6C65	DCC811111	C2012B 1E 104K A TD84N
6C66	DCC810511	C2012F 1H 103Z A TD84N
6C67	DCC816601	C2012CH 1H 101J A TD84N
6C68, 6C69	DCC810511	C2012F 1H 103Z A TD84N
6C70 to 6C72	DCC816801	C2012CH 1H 102J A TD84N
6C75	DCC820251	C2012B 1C 474K A TD0804N
6C80	DCC810571	C2012F 1H 104Z A TD0804N
6C90 to 6C96	DCC810511	C2012F 1H 103Z A TD84N
6C99	DCC819091	GRM42-6B 106K6.3PT TE0804N
6D1,6D2	DDD810461	HSM 124S-JTL TE0804L
6D3	DDD810081	1SS 226 (TE85L) TE0804L
6D5, 6D6	DDD810241	1SS 272 TE0804R
6D7 to 6D9	DDD810461	HSM 124S-JTL TE0804L
6D10	DDD810241	1SS 272 TE0804R
6D11	DDD810131	1SS 269 TE0804L
6FL1 to 6FL4	DCL870041	NFM39R12C222T1 TE0804N
6FL7	DCL870041	NFM39R12C222T1 TE0804N
6FL10 to 6FL13	DCL870021	NFM41P11C204 TE1204N
6IC1	DIC614811	LT 1097S8-T2 TE1208B
6IC2, 6IC3	DIC619101	NJM 4558M(TE3) TE1208L
6IC4	DIC631231	HTR420 TRIGGER COMPARATOR
6IC5	DIC483321	74HC595F/AF TE1612B
6IC6	DIC322631	MC 10EL16D
6J1A	DCN126091	7093XXP01 PROBUS CONNECTOR

EXT TRIGGER 6

CIRCUIT REFERENCE	IWATSU PART NO.	DESCRIPTION
6J1B	DCN045681	CONNECTOR BNC-BR-PC-1
6L1	DCL810831	HK1608 18NJ-T TD0804N
6L2, 6L4	DCL811011	BLM21A121FPT TD0804N
6Q1	DTR860161	2SK 508 K51 TE0804L
6Q2 to 6Q4	DTR830521	2SC 3583-T1B TE0804L
6Q5, 6Q6	DTR810041	2SA 1162Y TE85L
6Q7 to 6Q9	DTR890471	DTA114YK/RN2407 TE0804L
6Q10	DTR830521	2SC 3583-T1B TE0804L
6Q12	DTR810041	2SA 1162Y TE85L
6Q14	DTR838661	2SC 2712LG TE85L
6Q15	DTR890581	DTC114YK/RN1407 TE0804L
6Q17	DTR810041	2SA 1162Y TE85L
6R1 to 6R10	DRZ820971	RN73G 2A 20ΩD TD0804N
6R11	DRZ833071	RK73H 2A 82ΩF TD0804N
6R12	DRZ833531	RK73H 2A 27ΩF TD0804N
6R13	DRZ832151	RK73H 2A 390ΩF TD0804N
6R14	DRZ830861	MCR10J 300E TD0804N
6R15 to 6R17	DRZ828721	RR1220P-224-B TD0804N
6R18	DRZ828731	RR1220P-244-B TD0804N
6R19	DRZ828711	RR1220P-114-B TD0804N
6R20	DRZ832261	RK73H 2A 1.1KΩF TD0804N
6R21	DRZ832091	RK73H 2A 220ΩF TD0804N
6R22	DRZ820971	RN73G 2A 20ΩD TD0804N
6R24	DRZ833031	RK73H 2A 56ΩF TD0804N
6R35 to 6R39	DRZ828761	RR1220P-204-D TD0804N
6R44	DRZ832011	RK73H 2A 100ΩF TD0804N
6R45	DRZ832051	RK73H 2A 150ΩF TD0804N
6R46, 6R47	DRZ831431	MCR10J 335E TD0804N
6R48	DRZ833021	RK73H 2A 51ΩF TD0804N
6R49	DRZ820971	RN73G 2A 20ΩD TD0804N
6R50	DRZ832101	RK73H 2A 240ΩF TD0804N
6R51	DRZ830861	MCR10J 300E TD0804N
6R53	DRZ832531	RK73H 2A 15KΩF TD0804N
6R54	DRZ832251	RK73H 2A 1.0KΩF TD0804N
6R55	DRZ832441	RK73H 2A 6.2KΩF TD0804N
6R56	DRZ832251	RK73H 2A 1.0KΩF TD0804N
6R58	DRZ832051	RK73H 2A 150ΩF TD0804N
6R59	DRZ820971	RN73G 2A 20ΩD TD0804N
6R60 to 6R62	DRZ832201	RK73H 2A 620ΩF TD0804N
6R63	DRZ820971	RN73G 2A 20ΩD TD0804N
6R64 to 6R67	DRZ832101	RK73H 2A 240ΩF TD0804N
6R68	DRZ832601	RK73H 2A 30KΩF TD0804N
6R69	DRZ832411	RK73H 2A 4.7KΩF TD0804N
6R70	DRZ832101	RK73H 2A 240ΩF TD0804N
6R72	DRZ831121	MCR10J 240E TD0804N
6R74	DRZ828761	RR1220P-204-D TD0804N
6R76	DRZ828711	RR1220P-114-B TD0804N
6R77	DRZ832251	RK73H 2A 1.0KΩF TD0804N
6R78	DRZ832661	RK73H 2A 51KΩF TD0804N
6R79	DRZ832391	RK73H 2A 3.9KΩF TD0804N
6R80	DRZ832631	RK73H 2A 39KΩF TD0804N
6R81	DRZ832361	RK73H 2A 3.0KΩF TD0804N

EXT TRIGGER 6

CIRCUIT REFERENCE	IWATSU PART NO.	DESCRIPTION
6R83	DRZ832321	RK73H 2A 2.0KΩF TD0804N
6R84	DRZ832301	RK73H 2A 1.6KΩF TD0804N
6R85	DDD074121	LP310 1F 202F 302 TE0804N
6R86	DRZ832491	RK73H 2A 10KΩF TD0804N
6R87	DDD074121	LP310 1F 202F 302 TE0804N
6R88	DRZ832491	RK73H 2A 10KΩF TD0804N
6R89	DRZ832251	RK73H 2A 1.0KΩF TD0804N
6R90	DRZ832491	RK73H 2A 10KΩF TD0804N
6R91	DRZ828571	RN73F 2A 510ΩB TD0804N
6R92	DRZ833021	RK73H 2A 51ΩF TD0804N
6R93	DRZ833011	RK73H 2A 47ΩF TD0804N
6R97	DRZ832291	RK73H 2A 1.5KΩF TD0804N
6R98	DRZ832471	RK73H 2A 8.2KΩF TD0804N
6R100	DRZ831121	MCR10J 240E TD0804N
6R101	DRZ832421	RK73H 2A 5.1KΩF TD0804N
6R105	DRZ832331	RK73H 2A 2.2KΩF TD0804N
6R106	DRZ832191	RK73H 2A 560ΩF TD0804N
6R107	DRZ832331	RK73H 2A 2.2KΩF TD0804N
6R108	DRZ832191	RK73H 2A 560ΩF TD0804N
6R109	DRZ832011	RK73H 2A 100ΩF TD0804N
6R110	DRZ832321	RK73H 2A 2.0KΩF TD0804N
6R120	DRZ832251	RK73H 2A 1.0KΩF TD0804N
6R123 to 6R125	DRZ832011	RK73H 2A 100ΩF TD0804N
6R126	DRZ832251	RK73H 2A 1.0KΩF TD0804N
6R127	DRZ832391	RK73H 2A 3.9KΩF TD0804N
6R128	DRZ832121	RK73H 2A 300ΩF TD0804N
6R150	DRZ832011	RK73H 2A 100ΩF TD0804N
6R151, 6R152	DRZ832491	RK73H 2A 10KΩF TD0804N
6R154	DRZ820971	RN73G 2A 20ΩD TD0804N
6R155, 6R156	DRZ832251	RK73H 2A 1.0KΩF TD0804N
6R157	DRZ832051	RK73H 2A 150ΩF TD0804N
6R158 to 6R161	DRZ832491	RK73H 2A 10KΩF TD0804N
6R162	DRZ832081	RK73H 2A 200ΩF TD0804N
6R163	DRZ832321	RK73H 2A 2.0KΩF TD0804N
6RL1, 6RL2	DKD028511	NAS-5W-K-TN-B05 TE2416B
6RL3	DKD030381	NASL-5W-K-TN TE2416B

CH1 A/D CNVT 7

CIRCUIT REFERENCE	IWATSU PART NO.	DESCRIPTION
7C1	DCC810511	C2012F 1H 103Z A TD84N
7C3	DCC816641	C2012CH 1H 221J A TD84N
7C5	DCC820021	C2012F 1C 105Z A TD84N
7C6, 7C11, 7C12	DCC810511	C2012F 1H 103Z A TD84N
7C13	DCC820021	C2012F 1C 105Z A TD84N
7C20	DCC810511	C2012F 1H 103Z A TD84N
7C22	DCC810571	C2012F 1H 104Z A TD0804N
7C30	DCC820021	C2012F 1C 105Z A TD84N
7C31, 7C32	DCC810571	C2012F 1H 104Z A TD0804N
7C40, 7C46	DCC820021	C2012F 1C 105Z A TD84N
7C47	DCC810511	C2012F 1H 103Z A TD84N
7C50	DCC816801	C2012CH 1H 102J A TD84N
7C51	DCC820121	EMK325F 106ZH-T TE0804N
7C52 to 7C54	DCC810511	C2012F 1H 103Z A TD84N
7C55	DCE219051	SME-CE04W 1A 101M TC04R
7C56	DCC810511	C2012F 1H 103Z A TD84N
7C57 to 7C59	DCC820121	EMK325F 106ZH-T TE0804N
7C60	DCC810571	C2012F 1H 104Z A TD0804N
7C61 to 7C63	DCC810511	C2012F 1H 103Z A TD84N
7C64	DCC820121	EMK325F 106ZH-T TE0804N
7C65	DCC810571	C2012F 1H 104Z A TD0804N
7C66	DCC810511	C2012F 1H 103Z A TD84N
7C67	DCE219151	SME-CE04W 1A 471M TC04R
7C68, 7C69	DCC820121	EMK325F 106ZH-T TE0804N
7C70 to 7C73	DCC810571	C2012F 1H 104Z A TD0804N
7C74	DCC820121	EMK325F 106ZH-T TE0804N
7C80	DCE219051	SME-CE04W 1A 101M TC04R
7C81, 7C83	DCC820031	C2012F 1C 224Z A TD84N
7C84	DCE219051	SME-CE04W 1A 101M TC04R
7C85	DCC820031	C2012F 1C 224Z A TD84N
7C86	DCE229201	SME-CE04W 1E 470M TC04R
7C87	DCC820031	C2012F 1C 224Z A TD84N
7C88	DCE229201	SME-CE04W 1E 470M TC04R
7C89	DCC820031	C2012F 1C 224Z A TD84N
7C90 to 7C92	DCC810571	C2012F 1H 104Z A TD0804N
7C94, 7C95	DCC810511	C2012F 1H 103Z A TD84N
7C96	DCC810571	C2012F 1H 104Z A TD0804N
7FL1 to 7FL3	DCL870021	NFM41P11C204 TE1204N
7IC1	DIC642371	HAD626 500MS/S ADC
7IC2	DIC619101	NJM 4558M(TE3) TE1208L
7IC3, 7IC4	DIC619271	TA 75S558F (TE85L) TE0804L
7J1	DCN126131	89177-5600
7L4 to 7L8	DCL119361	BL02RN2-R62 TD04N
7Q1	DTR890841	IMX3 TE0804R
7Q2, 7Q3	DTR830481	2SC 2873-Y TE1208L
7Q4	DTR129011	2SB 605K/L TRB
7Q5	DTR810161	2SA 1213-Y TE12L
7R1	DRZ832531	RK73H 2A 15KΩF TD0804N
7R2	DRZ832721	RK73H 2A 91KΩF TD0804N
7R3	DRZ832361	RK73H 2A 3.0KΩF TD0804N
7R4	DRZ832341	RK73H 2A 2.4KΩF TD0804N
7R10	DRZ832491	RK73H 2A 10KΩF TD0804N
7R11	DRZ832321	RK73H 2A 2.0KΩF TD0804N

CH1 A/D CNVT [7]

CIRCUIT REFERENCE	IWATSU PART NO.	DESCRIPTION
7R12	DRZ832301	RK73H 2A 1.6KΩF TD0804N
7R13	DRZ833061	RK73H 2A 75ΩF TD0804N
7R14	DRZ832051	RK73H 2A 150ΩF TD0804N
7R15 to 7R17	DRZ832251	RK73H 2A 1.0KΩF TD0804N
7R20	DRZ832341	RK73H 2A 2.4KΩF TD0804N
7R21	DRZ832481	RK73H 2A 9.1KΩF TD0804N
7R22	DRZ832311	RK73H 2A 1.8KΩF TD0804N
7R25	DRZ832251	RK73H 2A 1.0KΩF TD0804N
7R26	DRZ832211	RK73H 2A 680ΩF TD0804N
7R30	DRZ832321	RK73H 2A 2.0KΩF TD0804N
7R31	DRZ832311	RK73H 2A 1.8KΩF TD0804N
7R32, 7R33	DRZ833061	RK73H 2A 75ΩF TD0804N
7R34	DRZ833551	RK73H 2A 33ΩF TD0804N
7R35	DRZ832251	RK73H 2A 1.0KΩF TD0804N
7R40 to 7R43	DRZ833491	RK73H 2A 18ΩF TD0804N
7R46, 7R47	DRZ832351	RK73H 2A 2.7KΩF TD0804N
7R48, 7R49	DRZ832281	RK73H 2A 1.3KΩF TD0804N
7R50	DRZ832171	RK73H 2A 470ΩF TD0804N
7R51	DRZ832351	RK73H 2A 2.7KΩF TD0804N
7R52	DRZ832121	RK73H 2A 300ΩF TD0804N
7R53	DRZ832111	RK73H 2A 270ΩF TD0804N
7R54	DRZ831591	MCR10J 4R7E TD0804N

CH2 A/D CNVT [8]

CIRCUIT REFERENCE	IWATSU PART NO.	DESCRIPTION
8C1	DCC810511	C2012F 1H 103Z A TD84N
8C3	DCC816641	C2012CH 1H 221J A TD84N
8C5	DCC820021	C2012F 1C 105Z A TD84N
8C6, 8C11, 8C12	DCC810511	C2012F 1H 103Z A TD84N
8C13	DCC820021	C2012F 1C 105Z A TD84N
8C20	DCC810511	C2012F 1H 103Z A TD84N
8C22	DCC810571	C2012F 1H 104Z A TD0804N
8C30	DCC820021	C2012F 1C 105Z A TD84N
8C31, 8C32	DCC810571	C2012F 1H 104Z A TD0804N
8C40, 8C46	DCC820021	C2012F 1C 105Z A TD84N
8C47	DCC810511	C2012F 1H 103Z A TD84N
8C50	DCC816801	C2012CH 1H 102J A TD84N
8C51	DCC820121	EMK325F 106ZH-T TE0804N
8C52 to 8C54	DCC810511	C2012F 1H 103Z A TD84N
8C55	DCE219051	SME-CE04W 1A 101M TC04R
8C56	DCC810511	C2012F 1H 103Z A TD84N
8C57 to 8C59	DCC820121	EMK325F 106ZH-T TE0804N
8C60	DCC810571	C2012F 1H 104Z A TD0804N
8C61 to 8C63	DCC810511	C2012F 1H 103Z A TD84N
8C64	DCC820121	EMK325F 106ZH-T TE0804N
8C65	DCC810571	C2012F 1H 104Z A TD0804N
8C66	DCC810511	C2012F 1H 103Z A TD84N
8C67	DCE219151	SME-CE04W 1A 471M TC04R
8C68, 8C69	DCC820121	EMK325F 106ZH-T TE0804N
8C70 to 8C73	DCC810571	C2012F 1H 104Z A TD0804N
8C74	DCC820121	EMK325F 106ZH-T TE0804N
8C80	DCE219051	SME-CE04W 1A 101M TC04R
8C81, 8C83	DCC820031	C2012F 1C 224Z A TD84N
8C84	DCE219051	SME-CE04W 1A 101M TC04R
8C85	DCC820031	C2012F 1C 224Z A TD84N
8C86	DCE229201	SME-CE04W 1E 470M TC04R
8C87	DCC820031	C2012F 1C 224Z A TD84N
8C88	DCE229201	SME-CE04W 1E 470M TC04R
8C89	DCC820031	C2012F 1C 224Z A TD84N
8C90 to 8C92	DCC810571	C2012F 1H 104Z A TD0804N
8C94, 8C95	DCC810511	C2012F 1H 103Z A TD84N
8C96	DCC810571	C2012F 1H 104Z A TD0804N
8FL1 to 8FL3	DCL870021	NFM41P11C204 TE1204N
8IC1	DIC642371	HAD626 500MS/S ADC
8IC2	DIC619101	NJM 4558M(TE3) TE1208L
8IC3, 8IC4	DIC619271	TA 75S558F (TE85L) TE0804L
8J1	DCN126131	89177-5600
8L4 to 8L8	DCL119361	BL02RN2-R62 TD04N
8Q1	DTR890841	IMX3 TE0804R
8Q2, 8Q3	DTR830481	2SC 2873-Y TE1208L
8Q4	DTR129011	2SB 605K/L TRB
8Q5	DTR810161	2SA 1213-Y TE12L
8R1	DRZ832531	RK73H 2A 15KΩF TD0804N
8R2	DRZ832721	RK73H 2A 91KΩF TD0804N
8R3	DRZ832361	RK73H 2A 3.0KΩF TD0804N
8R4	DRZ832341	RK73H 2A 2.4KΩF TD0804N
8R10	DRZ832491	RK73H 2A 10KΩF TD0804N

CH2 A/D CNVT 8

CIRCUIT REFERENCE	IWATSU PART NO.	DESCRIPTION
8R11	DRZ832321	RK73H 2A 2.0KΩF TD0804N
8R12	DRZ832301	RK73H 2A 1.6KΩF TD0804N
8R13	DRZ833061	RK73H 2A 75ΩF TD0804N
8R14	DRZ832051	RK73H 2A 150ΩF TD0804N
8R15 to 8R17	DRZ832251	RK73H 2A 1.0KΩF TD0804N
8R20	DRZ832341	RK73H 2A 2.4KΩF TD0804N
8R21	DRZ832481	RK73H 2A 9.1KΩF TD0804N
8R22	DRZ832311	RK73H 2A 1.8KΩF TD0804N
8R25	DRZ832251	RK73H 2A 1.0KΩF TD0804N
8R26	DRZ832211	RK73H 2A 680ΩF TD0804N
8R30	DRZ832321	RK73H 2A 2.0KΩF TD0804N
8R31	DRZ832311	RK73H 2A 1.8KΩF TD0804N
8R32, 8R33	DRZ833061	RK73H 2A 75ΩF TD0804N
8R34	DRZ833551	RK73H 2A 33ΩF TD0804N
8R35	DRZ832251	RK73H 2A 1.0KΩF TD0804N
8R40 to 8R43	DRZ833491	RK73H 2A 18ΩF TD0804N
8R46, 8R47	DRZ832351	RK73H 2A 2.7KΩF TD0804N
8R48, 8R49	DRZ832281	RK73H 2A 1.3KΩF TD0804N
8R50	DRZ832171	RK73H 2A 470ΩF TD0804N
8R51	DRZ832351	RK73H 2A 2.7KΩF TD0804N
8R52	DRZ832121	RK73H 2A 300ΩF TD0804N
8R53	DRZ832111	RK73H 2A 270ΩF TD0804N
8R54	DRZ831591	MCR10J 4R7E TD0804N

CH3 A/D CNVT 9

CIRCUIT REFERENCE	IWATSU PART NO.	DESCRIPTION
9C1	DCC810511	C2012F 1H 103Z A TD84N
9C3	DCC816641	C2012CH 1H 221J A TD84N
9C5	DCC820021	C2012F 1C 105Z A TD84N
9C6, 9C11, 9C12	DCC810511	C2012F 1H 103Z A TD84N
9C13	DCC820021	C2012F 1C 105Z A TD84N
9C20	DCC810511	C2012F 1H 103Z A TD84N
9C22	DCC810571	C2012F 1H 104Z A TD0804N
9C30	DCC820021	C2012F 1C 105Z A TD84N
9C31, 9C32	DCC810571	C2012F 1H 104Z A TD0804N
9C40, 9C46	DCC820021	C2012F 1C 105Z A TD84N
9C47	DCC810511	C2012F 1H 103Z A TD84N
9C50	DCC816801	C2012CH 1H 102J A TD84N
9C51	DCC820121	EMK325F 106ZH-T TE0804N
9C52 to 9C54	DCC810511	C2012F 1H 103Z A TD84N
9C55	DCE219051	SME-CE04W 1A 101M TC04R
9C56	DCC810511	C2012F 1H 103Z A TD84N
9C57 to 9C59	DCC820121	EMK325F 106ZH-T TE0804N
9C60	DCC810571	C2012F 1H 104Z A TD0804N
9C61 to 9C63	DCC810511	C2012F 1H 103Z A TD84N
9C64	DCC820121	EMK325F 106ZH-T TE0804N
9C65	DCC810571	C2012F 1H 104Z A TD0804N
9C66	DCC810511	C2012F 1H 103Z A TD84N
9C67	DCE219151	SME-CE04W 1A 471M TC04R
9C68, 9C69	DCC820121	EMK325F 106ZH-T TE0804N
9C70 to 9C73	DCC810571	C2012F 1H 104Z A TD0804N
9C74	DCC820121	EMK325F 106ZH-T TE0804N
9C80	DCE219051	SME-CE04W 1A 101M TC04R
9C81, 9C83	DCC820031	C2012F 1C 224Z A TD84N
9C84	DCE219051	SME-CE04W 1A 101M TC04R
9C85	DCC820031	C2012F 1C 224Z A TD84N
9C86	DCE229201	SME-CE04W 1E 470M TC04R
9C87	DCC820031	C2012F 1C 224Z A TD84N
9C88	DCE229201	SME-CE04W 1E 470M TC04R
9C89	DCC820031	C2012F 1C 224Z A TD84N
9C90 to 9C92	DCC810571	C2012F 1H 104Z A TD0804N
9C94, 9C95	DCC810511	C2012F 1H 103Z A TD84N
9C96	DCC810571	C2012F 1H 104Z A TD0804N
9FL1 to 9FL3	DCL870021	NFM41P11C204 TE1204N
9IC1	DIC642371	HAD626 500MS/S ADC
9IC2	DIC619101	NJM 4558M(TE3) TE1208L
9IC3, 9IC4	DIC619271	TA 75S558F (TE85L) TE0804L
9J1	DCN126131	89177-5600
9L4 to 9L8	DCL119361	BL02RN2-R62 TD04N
9Q1	DTR890841	IMX3 TE0804R
9Q2, 9Q3	DTR830481	2SC 2873-Y TE1208L
9Q4	DTR129011	2SB 605K/L TRB
9Q5	DTR810161	2SA 1213-Y TE12L
9R1	DRZ832531	RK73H 2A 15KΩF TD0804N
9R2	DRZ832721	RK73H 2A 91KΩF TD0804N
9R3	DRZ832361	RK73H 2A 3.0KΩF TD0804N
9R4	DRZ832341	RK73H 2A 2.4KΩF TD0804N
9R10	DRZ832491	RK73H 2A 10KΩF TD0804N
9R11	DRZ832321	RK73H 2A 2.0KΩF TD0804N

CH3 A/D CNVT 9

CIRCUIT REFERENCE	IWATSU PART NO.	DESCRIPTION
9R12	DRZ832301	RK73H 2A 1.6KΩF TD0804N
9R13	DRZ833061	RK73H 2A 75ΩF TD0804N
9R14	DRZ832051	RK73H 2A 150ΩF TD0804N
9R15 to 9R17	DRZ832251	RK73H 2A 1.0KΩF TD0804N
9R20	DRZ832341	RK73H 2A 2.4KΩF TD0804N
9R21	DRZ832481	RK73H 2A 9.1KΩF TD0804N
9R22	DRZ832311	RK73H 2A 1.8KΩF TD0804N
9R25	DRZ832251	RK73H 2A 1.0KΩF TD0804N
9R26	DRZ832211	RK73H 2A 680ΩF TD0804N
9R30	DRZ832321	RK73H 2A 2.0KΩF TD0804N
9R31	DRZ832311	RK73H 2A 1.8KΩF TD0804N
9R32, 9R33	DRZ833061	RK73H 2A 75ΩF TD0804N
9R34	DRZ833551	RK73H 2A 33ΩF TD0804N
9R35	DRZ832251	RK73H 2A 1.0KΩF TD0804N
9R40 to 9R43	DRZ833491	RK73H 2A 18ΩF TD0804N
9R46, 9R47	DRZ832351	RK73H 2A 2.7KΩF TD0804N
9R48, 9R49	DRZ832281	RK73H 2A 1.3KΩF TD0804N
9R50	DRZ832171	RK73H 2A 470ΩF TD0804N
9R51	DRZ832351	RK73H 2A 2.7KΩF TD0804N
9R52	DRZ832121	RK73H 2A 300ΩF TD0804N
9R53	DRZ832111	RK73H 2A 270ΩF TD0804N
9R54	DRZ831591	MCR10J 4R7E TD0804N

CH4 A/D CNVT 10

CIRCUIT REFERENCE	IWATSU PART NO.	DESCRIPTION
10C1	DCC810511	C2012F 1H 103Z A TD84N
10C3	DCC816641	C2012CH 1H 221J A TD84N
10C5	DCC820021	C2012F 1C 105Z A TD84N
10C6, 10C11	DCC810511	C2012F 1H 103Z A TD84N
10C12	DCC810511	C2012F 1H 103Z A TD84N
10C13	DCC820021	C2012F 1C 105Z A TD84N
10C20	DCC810511	C2012F 1H 103Z A TD84N
10C22	DCC810571	C2012F 1H 104Z A TD0804N
10C30	DCC820021	C2012F 1C 105Z A TD84N
10C31, 10C32	DCC810571	C2012F 1H 104Z A TD0804N
10C40, 10C46	DCC820021	C2012F 1C 105Z A TD84N
10C47	DCC810511	C2012F 1H 103Z A TD84N
10C50	DCC816801	C2012CH 1H 102J A TD84N
10C51	DCC820121	EMK325F 106ZH-T TE0804N
10C52 to 10C54	DCC810511	C2012F 1H 103Z A TD84N
10C55	DCE219051	SME-CE04W 1A 101M TC04R
10C56	DCC810511	C2012F 1H 103Z A TD84N
10C57 to 10C59	DCC820121	EMK325F 106ZH-T TE0804N
10C60	DCC810571	C2012F 1H 104Z A TD0804N
10C61 to 10C63	DCC810511	C2012F 1H 103Z A TD84N
10C64	DCC820121	EMK325F 106ZH-T TE0804N
10C65	DCC810571	C2012F 1H 104Z A TD0804N
10C66	DCC810511	C2012F 1H 103Z A TD84N
10C67	DCE219151	SME-CE04W 1A 471M TC04R
10C68, 10C69	DCC820121	EMK325F 106ZH-T TE0804N
10C70 to 10C73	DCC810571	C2012F 1H 104Z A TD0804N
10C74	DCC820121	EMK325F 106ZH-T TE0804N
10C80	DCE219051	SME-CE04W 1A 101M TC04R
10C81, 10C83	DCC820031	C2012F 1C 224Z A TD84N
10C84	DCE219051	SME-CE04W 1A 101M TC04R
10C85	DCC820031	C2012F 1C 224Z A TD84N
10C86	DCE229201	SME-CE04W 1E 470M TC04R
10C87	DCC820031	C2012F 1C 224Z A TD84N
10C88	DCE229201	SME-CE04W 1E 470M TC04R
10C89	DCC820031	C2012F 1C 224Z A TD84N
10C90 to 10C92	DCC810571	C2012F 1H 104Z A TD0804N
10C94, 10C95	DCC810511	C2012F 1H 103Z A TD84N
10C96	DCC810571	C2012F 1H 104Z A TD0804N
10FL1 to 10FL3	DCL870021	NFM41P11C204 TE1204N
10IC1	DIC642371	HAD626 500MS/S ADC
10IC2	DIC619101	NJM 4558M(TE3) TE1208L
10IC3, 10IC4	DIC619271	TA 75S558F (TE85L) TE0804L
10J1	DCN126131	89177-5600
10L4 to 10L8	DCL119361	BL02RN2-R62 TD04N
10Q1	DTR890841	IMX3 TE0804R
10Q2, 10Q3	DTR830481	2SC 2873-Y TE1208L
10Q4	DTR129011	2SB 605K/L TRB
10Q5	DTR810161	2SA 1213-Y TE12L
10R1	DRZ832531	RK73H 2A 15KΩF TD0804N
10R2	DRZ832721	RK73H 2A 91KΩF TD0804N
10R3	DRZ832361	RK73H 2A 3.0KΩF TD0804N
10R4	DRZ832341	RK73H 2A 2.4KΩF TD0804N

CH4 A/D CNVT [10]

CIRCUIT REFERENCE	IWATSU PART NO.	DESCRIPTION
10R10	DRZ832491	RK73H 2A 10KΩF TD0804N
10R11	DRZ832321	RK73H 2A 2.0KΩF TD0804N
10R12	DRZ832301	RK73H 2A 1.6KΩF TD0804N
10R13	DRZ833061	RK73H 2A 75ΩF TD0804N
10R14	DRZ832051	RK73H 2A 150ΩF TD0804N
10R15 to 10R17	DRZ832251	RK73H 2A 1.0KΩF TD0804N
10R20	DRZ832341	RK73H 2A 2.4KΩF TD0804N
10R21	DRZ832481	RK73H 2A 9.1KΩF TD0804N
10R22	DRZ832311	RK73H 2A 1.8KΩF TD0804N
10R25	DRZ832251	RK73H 2A 1.0KΩF TD0804N
10R26	DRZ832211	RK73H 2A 680ΩF TD0804N
10R30	DRZ832321	RK73H 2A 2.0KΩF TD0804N
10R31	DRZ832311	RK73H 2A 1.8KΩF TD0804N
10R32, 10R33	DRZ833061	RK73H 2A 75ΩF TD0804N
10R34	DRZ833551	RK73H 2A 33ΩF TD0804N
10R35	DRZ832251	RK73H 2A 1.0KΩF TD0804N
10R40 to 10R43	DRZ833491	RK73H 2A 18ΩF TD0804N
10R46, 10R47	DRZ832351	RK73H 2A 2.7KΩF TD0804N
10R48, 10R49	DRZ832281	RK73H 2A 1.3KΩF TD0804N
10R50	DRZ832171	RK73H 2A 470ΩF TD0804N
10R51	DRZ832351	RK73H 2A 2.7KΩF TD0804N
10R52	DRZ832121	RK73H 2A 300ΩF TD0804N
10R53	DRZ832111	RK73H 2A 270ΩF TD0804N
10R54	DRZ831591	MCR10J 4R7E TD0804N

TRIG SELECTOR [11]

CIRCUIT REFERENCE	IWATSU PART NO.	DESCRIPTION
11C1	DCC810571	C2012F 1H 104Z A TD0804N
11C2	DCC820021	C2012F 1C 105Z A TD84N
11C3, 11C5	DCC810571	C2012F 1H 104Z A TD0804N
11C7, 11C9	DCC810571	C2012F 1H 104Z A TD0804N
11C10	DCC820021	C2012F 1C 105Z A TD84N
11C11	DCC810571	C2012F 1H 104Z A TD0804N
11C12	DCC820021	C2012F 1C 105Z A TD84N
11C13, 11C15	DCC810571	C2012F 1H 104Z A TD0804N
11C17, 11C19	DCC810571	C2012F 1H 104Z A TD0804N
11C20	DCC820021	C2012F 1C 105Z A TD84N
11C21	DCC810511	C2012F 1H 103Z A TD84N
11C23	DCC816401	C2012CH 1H 030C A TD84N
11C25	DCC816521	C2012CH 1H 220J A TD84N
11C26	DCC810571	C2012F 1H 104Z A TD0804N
11C31	DCC810511	C2012F 1H 103Z A TD84N
11C33	DCC816401	C2012CH 1H 030C A TD84N
11C35	DCC816521	C2012CH 1H 220J A TD84N
11C36	DCC810571	C2012F 1H 104Z A TD0804N
11C37	DCC816521	C2012CH 1H 220J A TD84N
11C38	DCC810511	C2012F 1H 103Z A TD84N
11C42	DCC816521	C2012CH 1H 220J A TD84N
11C43	DCC810571	C2012F 1H 104Z A TD0804N
11C54, 11C56	DCC810511	C2012F 1H 103Z A TD84N
11C57	DCC810571	C2012F 1H 104Z A TD0804N
11C70 to 11C73	DCC810571	C2012F 1H 104Z A TD0804N
11C74	DCC820121	EMK325F 106ZH-T TE0804N
11C75	DCE219051	SME-CE04W 1A 101M TC04R
11C76 to 11C82	DCC810571	C2012F 1H 104Z A TD0804N
11D1	DDD810241	1SS 272 TE0804R
11DL1, 11DL2	DZB999061	LDH33A202B TE1208B
11DL4 to 11DL7	DZB999071	LDH33A801B TE1208B
11FL1	DCL870021	NFM41P11C204 TE1204N
11IC1, 11IC2	DIC322671	MC 10E116FN/SY 10E116JC
11IC3	DIC322931	MC 10E157FN
11IC4	DIC891061	MST412 SMART TRIGGER IC
11IC5	DIC322831	MC 10EL11D
11IC6	DIC499821	TC7S04F/SC7S04F TE0804L
11IC7	DIC322721	MC 10H102M
11L1	DCL811011	BLM21A121FPT TD0804N
11Q1	DTR149011	2SD 571K/L TRB
11Q2	DTR890761	IMX5 TE0804R
11R1 to 11R21	DRZ833021	RK73H 2A 51ΩF TD0804N
11R22	DRZ832311	RK73H 2A 1.8KΩF TD0804N
11R23	DRZ832371	RK73H 2A 3.3KΩF TD0804N
11R24	DRZ832291	RK73H 2A 1.5KΩF TD0804N
11R25	DRZ832481	RK73H 2A 9.1KΩF TD0804N
11R26, 11R27	DRZ833021	RK73H 2A 51ΩF TD0804N
11R31	DRZ833021	RK73H 2A 51ΩF TD0804N
11R32	DRZ832311	RK73H 2A 1.8KΩF TD0804N
11R33	DRZ832371	RK73H 2A 3.3KΩF TD0804N
11R34	DRZ832291	RK73H 2A 1.5KΩF TD0804N
11R35	DRZ832481	RK73H 2A 9.1KΩF TD0804N
11R36	DRZ833021	RK73H 2A 51ΩF TD0804N

TRIG SELECTOR [11]

CIRCUIT REFERENCE	IWATSU PART NO.	DESCRIPTION
11R37	DRZ832481	RK73H 2A 9.1KΩF TD0804N
11R38 to 11R41	DRZ833021	RK73H 2A 51ΩF TD0804N
11R42	DRZ832481	RK73H 2A 9.1KΩF TD0804N
11R43, 11R44	DRZ832011	RK73H 2A 100ΩF TD0804N
11R45 to 11R47	DRZ833061	RK73H 2A 75ΩF TD0804N
11R48	DRZ832091	RK73H 2A 220ΩF TD0804N
11R49, 11R50	DRZ833041	RK73H 2A 62ΩF TD0804N
11R51, 11R52	DRZ833441	RK73H 2A 10ΩF TD0804N
11R53	DRZ832711	RK73H 2A 82KΩF TD0804N
11R54, 11R55	DRZ833011	RK73H 2A 47ΩF TD0804N
11R56	DRZ832211	RK73H 2A 680ΩF TD0804N
11R57	DRZ832251	RK73H 2A 1.0KΩF TD0804N
11R58	DRZ833061	RK73H 2A 75ΩF TD0804N
11R59, 11R60	DRZ833021	RK73H 2A 51ΩF TD0804N
11R61	DRZ831501	MCR10 000E TD0804N
11R62 to 11R64	DRZ833021	RK73H 2A 51ΩF TD0804N
11R70 to 11R73	DRZ831501	MCR10 000E TD0804N
11R74	DRZ833441	RK73H 2A 10ΩF TD0804N
11R80 to 11R89	DRZ833031	RK73H 2A 56ΩF TD0804N
11R90 to 11R109	DRZ833551	RK73H 2A 33ΩF TD0804N

400MHZ OSC [12]

CIRCUIT REFERENCE	IWATSU PART NO.	DESCRIPTION
12C4	DCC810571	C2012F 1H 104Z A TD0804N
12C7, 12C8	DCC816521	C2012CH 1H 220J A TD84N
12C13	DCC816521	C2012CH 1H 220J A TD84N
12C17	DCC810571	C2012F 1H 104Z A TD0804N
12C19, 12C20	DCC810511	C2012F 1H 103Z A TD84N
12C21	DCC816381	C2012CH 1H 020C A TD84N
12C22	DCC815891	C2012CH 1H 150J A TD84N
12C23, 12C27	DCC810511	C2012F 1H 103Z A TD84N
12C31	DCC815841	C2012SL 1H 681J A TD84N
12C34	DCE219151	SME-CE04W 1A 471M TC04R
12C35	DCC819091	GRM42-6B 106K6.3PT TE0804N
12C40	DCC816421	C2012CH 1H 040C A TD84N
12C41	DCC810511	C2012F 1H 103Z A TD84N
12C50 to 12C56	DCC810571	C2012F 1H 104Z A TD0804N
12D1	DDD810401	HVU 202A3 TE0804R
12D2	DDD810241	1SS 272 TE0804R
12DL1	DZB999051	LDH33A152B TE1208B
12IC1	DIC483321	74HC595F/AF TE1612B
12IC2	DIC322921	MC 10H117M
12IC3	DIC322601	MC 10EL01
12IC4, 12IC5	DIC619271	TA 75S558F (TE85L) TE0804L
12L1	DCL811031	HK2125 18NJ-T TE0804N
12Q1	DTR215791	2SK 2287
12R2, 12R4	DRZ833021	RK73H 2A 51ΩF TD0804N
12R9, 12R10	DRZ832481	RK73H 2A 9.1KΩF TD0804N
12R11, 12R12	DRZ833021	RK73H 2A 51ΩF TD0804N
12R14	DRZ832481	RK73H 2A 9.1KΩF TD0804N
12R17, 12R18	DRZ833021	RK73H 2A 51ΩF TD0804N
12R19, 12R20	DRZ832171	RK73H 2A 470ΩF TD0804N
12R21	DRZ833481	RK73H 2A 15ΩF TD0804N
12R22	DRZ832731	RK73H 2A 100KΩF TD0804N
12R23	DRZ832441	RK73H 2A 6.2KΩF TD0804N
12R26	DRZ832491	RK73H 2A 10KΩF TD0804N
12R27	DRZ832531	RK73H 2A 15KΩF TD0804N
12R30	DRZ832251	RK73H 2A 1.0KΩF TD0804N
12R31	DRZ832481	RK73H 2A 9.1KΩF TD0804N
12R32	DRZ832341	RK73H 2A 2.4KΩF TD0804N
12R33	DRZ832321	RK73H 2A 2.0KΩF TD0804N
12R34	DRZ832491	RK73H 2A 10KΩF TD0804N
12R40, 12R41	DRZ833021	RK73H 2A 51ΩF TD0804N
12RA1, 12RA2	DFB810131	RAC16 4D 472J A TD0804M
12RA3, 12RA4	DFB810051	RAC16 4D 103J A TD0804M
12Z21	MHN001311	HEATSINK OSH-2425-SPL

TV SYNC SEP 13

CIRCUIT REFERENCE	IWATSU PART NO.	DESCRIPTION
13C2	DCC816541	C2012CH 1H 330J A TD84N
13C3	DCC820261	C2012F 1C 225Z A TE0804N
13C5	DCC810511	C2012F 1H 103Z A TD84N
13C17	DCC816601	C2012CH 1H 101J A TD84N
13C21	DCC819091	GRM42-6B 106K6.3PT TE0804N
13C22	DCC820021	C2012F 1C 105Z A TD84N
13C34, 13C43	DCC810571	C2012F 1H 104Z A TD0804N
13C44	DCF810121	ECHU 1C 104J TE0804N
13C50 to 13C53	DCC810571	C2012F 1H 104Z A TD0804N
13C54	DCC816801	C2012CH 1H 102J A TD84N
13C57 to 13C62	DCC810571	C2012F 1H 104Z A TD0804N
13C63	DCC816801	C2012CH 1H 102J A TD84N
13C64	DCC810571	C2012F 1H 104Z A TD0804N
13C65, 13C66	DCC816801	C2012CH 1H 102J A TD84N
13C67, 13C68	DCC810571	C2012F 1H 104Z A TD0804N
13D4	DDD810241	1SS 272 TE0804R
13IC1	DIC623501	PC 1663G-E1 TE1208F
13IC2	DIC614411	PC 812G2-E1 TE1208F
13IC3	DIC889161	TC 4W53F(TE12L) TE1208R
13IC4	DIC639041	PC 311G2-E1 TE1208F
13IC5	DIC639031	NJM 2903M(TE3) TE1208L
13IC6, 13IC7	DIC889161	TC 4W53F(TE12L) TE1208R
13IC8	DIC699531	LM 1881M TE1208B
13IC9	DIC448531	MC 74HC153F/AF
13IC10	DIC483321	74HC595F/AF TE1612B
13Q1	DTR890551	DTC114EK/RN1402 TE0804L
13Q4	DTR870031	3SK 241 TE0804L
13Q5	DTR890841	IMX3 TE0804R
13R1	DRZ832251	RK73H 2A 1.0KΩF TD0804N
13R2	DRZ832731	RK73H 2A 100KΩF TD0804N
13R3	DRZ832091	RK73H 2A 220ΩF TD0804N
13R4	DRZ832811	RK73H 2A 220KΩF TD0804N
13R5	DRZ832751	RK73H 2A 120KΩF TD0804N
13R6	DRZ832731	RK73H 2A 100KΩF TD0804N
13R7	DRZ832571	RK73H 2A 22KΩF TD0804N
13R10	DRZ832391	RK73H 2A 3.9KΩF TD0804N
13R11, 13R12	DRZ832091	RK73H 2A 220ΩF TD0804N
13R13	DRZ832491	RK73H 2A 10KΩF TD0804N
13R14, 13R15	DRZ832251	RK73H 2A 1.0KΩF TD0804N
13R16	DRZ832731	RK73H 2A 100KΩF TD0804N
13R18	DRZ832491	RK73H 2A 10KΩF TD0804N
13R19	DRZ828761	RR1220P-204-D TD0804N
13R20	DRZ832501	RK73H 2A 11KΩF TD0804N
13R21	DRZ832731	RK73H 2A 100KΩF TD0804N
13R22, 13R24	DRZ832811	RK73H 2A 220KΩF TD0804N
13R25	DRZ832391	RK73H 2A 3.9KΩF TD0804N
13R30	DRZ832511	RK73H 2A 12KΩF TD0804N
13R31	DRZ832331	RK73H 2A 2.2KΩF TD0804N
13R32	DRZ832151	RK73H 2A 390ΩF TD0804N
13R34	DRZ832251	RK73H 2A 1.0KΩF TD0804N
13R35	DRZ832331	RK73H 2A 2.2KΩF TD0804N
13R36	DRZ832731	RK73H 2A 100KΩF TD0804N
13R37	DRZ832331	RK73H 2A 2.2KΩF TD0804N

TV SYNC SEP 13

CIRCUIT REFERENCE	IWATSU PART NO.	DESCRIPTION
13R38, 13R39	DRZ832411	RK73H 2A 4.7KΩF TD0804N
13R40	DRZ832331	RK73H 2A 2.2KΩF TD0804N
13R41	DRZ832951	RK73H 2A 820KΩF TD0804N
13R42	DRZ832891	RK73H 2A 470KΩF TD0804N
13R43	DRZ832191	RK73H 2A 560ΩF TD0804N
13R44	DRZ832931	RK73H 2A 680KΩF TD0804N
13R45, 13R46	DRZ832011	RK73H 2A 100ΩF TD0804N
13R47, 13R48	DRZ832371	RK73H 2A 3.3KΩF TD0804N
13R50	DRZ832511	RK73H 2A 12KΩF TD0804N

TIME BASE [14]

CIRCUIT REFERENCE	IWATSU PART NO.	DESCRIPTION
14C8	DCC810571	C2012F 1H 104Z A TD0804N
14C10, 14C21	DCC810511	C2012F 1H 103Z A TD84N
14C22, 14C28	DCC810511	C2012F 1H 103Z A TD84N
14C30, 14C31	DCC815841	C2012SL 1H 681J A TD84N
14C34, 14C35	DCC810941	C2012B 1H 682K A TD84N
14C36	DCC816601	C2012CH 1H 101J A TD84N
14C37, 14C38	DCC816801	C2012CH 1H 102J A TD84N
14C40	DCC810511	C2012F 1H 103Z A TD84N
14C41	DCC810571	C2012F 1H 104Z A TD0804N
14C42	DCC816421	C2012CH 1H 040C A TD84N
14C60	DCC820021	C2012F 1C 105Z A TD84N
14C61, 14C62	DCC810571	C2012F 1H 104Z A TD0804N
14C63	DCE219051	SME-CE04W 1A 101M TC04R
14C64 to 14C67	DCC810571	C2012F 1H 104Z A TD0804N
14C68, 14C69	DCE219051	SME-CE04W 1A 101M TC04R
14C70 to 14C75	DCC810571	C2012F 1H 104Z A TD0804N
14C76, 14C77	DCC810511	C2012F 1H 103Z A TD84N
14C78, 14C79	DCC810571	C2012F 1H 104Z A TD0804N
14C80	DCC820121	EMK325F 106ZH-T TE0804N
14C81	DCC810511	C2012F 1H 103Z A TD84N
14C83	DCC810571	C2012F 1H 104Z A TD0804N
14D1	DDD810241	1SS 272 TE0804R
14D2	DDD810261	HSM 88AS TL
14FL1, 14FL2	DCL870021	NFM41P11C204 TE1204N
14IC1	DIC891041	MTB411A TIMEBASE IC
14IC2	DIC891031	MCG426 CLOCK GENERATOR
14IC3	DHF060191	QCG571ABN-10.0000
14IC4	DIC322631	MC 10EL16D
14IC5	DHF060181	VC-5R0A30-2000 TE1608B
14IC6	DIC619271	TA 75S558F (TE85L) TE0804L
14IC7	DIC659791	TA 78L05F (TE12L) TE1208L
14IC8	DIC471841	PALCE16V8H-10JC/4 K0315ACQ
14L2, 14L4, 14L5	DCL811011	BLM21A121FPT TD0804N
14Q1	DTR890861	IMZ1 TE0804R
14Q2	DTR890851	IMH1 TE0804N
14R1, 14R2	DRZ833041	RK73H 2A 62ΩF TD0804N
14R3	DRZ833551	RK73H 2A 33ΩF TD0804N
14R4 to 14R7	DRZ833041	RK73H 2A 62ΩF TD0804N
14R8	DRZ832011	RK73H 2A 100ΩF TD0804N
14R10, 14R11	DRZ833021	RK73H 2A 51ΩF TD0804N
14R12 to 14R17	DRZ833041	RK73H 2A 62ΩF TD0804N
14R18	DRZ832311	RK73H 2A 1.8KΩF TD0804N
14R19	DRZ832371	RK73H 2A 3.3KΩF TD0804N
14R20	DRZ832331	RK73H 2A 2.2KΩF TD0804N
14R21	DRZ832311	RK73H 2A 1.8KΩF TD0804N
14R22	DRZ832331	RK73H 2A 2.2KΩF TD0804N
14R23	DRZ833041	RK73H 2A 62ΩF TD0804N
14R24 to 14R26	DRZ833021	RK73H 2A 51ΩF TD0804N
14R27	DRZ832731	RK73H 2A 100KΩF TD0804N
14R28, 14R29	DRZ833061	RK73H 2A 75ΩF TD0804N
14R30 to 14R33	DRZ832371	RK73H 2A 3.3KΩF TD0804N
14R34, 14R35	DRZ832491	RK73H 2A 10KΩF TD0804N

TIME BASE [14]

CIRCUIT REFERENCE	IWATSU PART NO.	DESCRIPTION
14R36	DRZ832251	RK73H 2A 1.0KΩF TD0804N
14R37 to 14R39	DRZ833021	RK73H 2A 51ΩF TD0804N
14R40	DRZ832211	RK73H 2A 680ΩF TD0804N
14R50, 14R51	DRZ833021	RK73H 2A 51ΩF TD0804N
14R53, 14R54	DRZ833551	RK73H 2A 33ΩF TD0804N
14R55	DRZ833021	RK73H 2A 51ΩF TD0804N
14R56	DRZ832011	RK73H 2A 100ΩF TD0804N
14R57	DRZ833041	RK73H 2A 62ΩF TD0804N
14R58, 14R59	DRZ832331	RK73H 2A 2.2KΩF TD0804N
14R60	DRZ832491	RK73H 2A 10KΩF TD0804N

T/D CNVT 15

CIRCUIT REFERENCE	IWATSU PART NO.	DESCRIPTION
15C1	DCC810511	C2012F 1H 103Z A TD84N
15C5	DCC810571	C2012F 1H 104Z A TD0804N
15C11	DCC816801	C2012CH 1H 102J A TD84N
15C14 to 15C16	DCC810571	C2012F 1H 104Z A TD0804N
15C21, 15C23	DCC810571	C2012F 1H 104Z A TD0804N
15C25	DCC810571	C2012F 1H 104Z A TD0804N
15C26	DCC820021	C2012F 1C 105Z A TD84N
15C27	DCC810511	C2012F 1H 103Z A TD84N
15C29	DCC810571	C2012F 1H 104Z A TD0804N
15C30, 15C31	DCC816801	C2012CH 1H 102J A TD84N
15C32, 15C33	DCC810571	C2012F 1H 104Z A TD0804N
15C34	DCC816801	C2012CH 1H 102J A TD84N
15C36	DCC810571	C2012F 1H 104Z A TD0804N
15C39	DCC816381	C2012CH 1H 020C A TD84N
15C41	DCC819091	GRM42-6B 106K6.3PT TE0804N
15C43	DCE219051	SME-CE04W 1A 101M TC04R
15C50	DCC810571	C2012F 1H 104Z A TD0804N
15C54	DCC816581	C2012CH 1H 680J A TD84N
15C55	DCC816511	C2012CH 1H 180J A TD84N
15C58	DCC816801	C2012CH 1H 102J A TD84N
15C60, 15C64	DCC810571	C2012F 1H 104Z A TD0804N
15C81, 15C83	DCE229201	SME-CE04W 1E 470M TC04R
15C84	DCC810571	C2012F 1H 104Z A TD0804N
15C85	DCE219051	SME-CE04W 1A 101M TC04R
15C86	DCC810571	C2012F 1H 104Z A TD0804N
15C87	DCE219051	SME-CE04W 1A 101M TC04R
15C88 to 15C91	DCC810571	C2012F 1H 104Z A TD0804N
15C92, 15C93	DCC820021	C2012F 1C 105Z A TD84N
15D1	DDD810261	HSM 88AS TL
15D2	DDD810461	HSM 124S-JTL TE0804L
15D3	DDD810261	HSM 88AS TL
15IC1	DIC614411	PC 812G2-E1 TE1208F
15IC2	DIC614811	LT 1097S8-T2 TE1208B
15IC3	DIC639161	NJM 360M(TE3) TE1208L
15IC4	DIC659371	NJM 431U-TE1 (JRC)
15L1 to 15L4	DCL811011	BLM21A121FPT TD0804N
15Q1	DTR810041	2SA 1162Y TE85L
15Q2	DTR898711	XN 6435 TE0804R
15Q3 to 15Q5	DTR830071	2SC 3356-T1B
15Q6	DTR229091	2SJ 144-GR(TE85L) TE0804L
15Q7 to 15Q11	DTR830071	2SC 3356-T1B
15Q12, 15Q13	DTR860161	2SK 508 K51 TE0804L
15Q14	DTR830071	2SC 3356-T1B
15R1	DRZ832511	RK73H 2A 12KΩF TD0804N
15R2	DRZ832441	RK73H 2A 6.2KΩF TD0804N
15R3	DRZ832031	RK73H 2A 120ΩF TD0804N
15R4	DRZ832301	RK73H 2A 1.6KΩF TD0804N
15R5	DRZ832361	RK73H 2A 3.0KΩF TD0804N
15R6	DRZ832971	RK73H 2A 1.0MΩF TD0804N
15R10	DRZ820581	RN73F 2A 6.8KΩD TD0804N
15R11	DRZ820621	RN73F 2A 10KΩD TD0804N
15R12	DRZ820871	RN73F 2A 2.4KΩD TD0804N
15R13	DRZ832411	RK73H 2A 4.7KΩF TD0804N

T/D CNVT 15

CIRCUIT REFERENCE	IWATSU PART NO.	DESCRIPTION
15R14, 15R15	DRZ832491	RK73H 2A 10KΩF TD0804N
15R17	DRZ832251	RK73H 2A 1.0KΩF TD0804N
15R18	DRZ832381	RK73H 2A 3.6KΩF TD0804N
15R19	DRZ832461	RK73H 2A 7.5KΩF TD0804N
15R20	DRZ832411	RK73H 2A 4.7KΩF TD0804N
15R21	DRZ832251	RK73H 2A 1.0KΩF TD0804N
15R22, 15R23	DRZ833011	RK73H 2A 47ΩF TD0804N
15R24	DRZ832331	RK73H 2A 2.2KΩF TD0804N
15R25	DRZ832251	RK73H 2A 1.0KΩF TD0804N
15R26	DRZ832221	RK73H 2A 750ΩF TD0804N
15R27	DRZ832441	RK73H 2A 6.2KΩF TD0804N
15R28	DRZ832431	RK73H 2A 5.6KΩF TD0804N
15R29	DRZ832301	RK73H 2A 1.6KΩF TD0804N
15R30	DRZ833011	RK73H 2A 47ΩF TD0804N
15R31	DRZ832011	RK73H 2A 100ΩF TD0804N
15R32, 15R33	DRZ833011	RK73H 2A 47ΩF TD0804N
15R34	DRZ832011	RK73H 2A 100ΩF TD0804N
15R35, 15R36	DRZ832251	RK73H 2A 1.0KΩF TD0804N
15R37	DRZ832051	RK73H 2A 150ΩF TD0804N
15R38	DRZ833021	RK73H 2A 51ΩF TD0804N
15R39	DRZ832611	RK73H 2A 33KΩF TD0804N
15R40	DRZ832051	RK73H 2A 150ΩF TD0804N
15R41	DRZ832161	RK73H 2A 430ΩF TD0804N
15R42	DRZ820011	RN73G 2A 30ΩD TD0804N
15R43	DRZ833571	RK73H 2A 39ΩF TD0804N
15R44	DRZ833011	RK73H 2A 47ΩF TD0804N
15R50, 15R51	DRZ833021	RK73H 2A 51ΩF TD0804N
15R54, 15R55	DRZ833011	RK73H 2A 47ΩF TD0804N
15R56	DRZ833511	RK73H 2A 22ΩF TD0804N
15R57	DRZ832011	RK73H 2A 100ΩF TD0804N
15R58	DRZ820541	RN73F 2A 4.7KΩD TD0804N
15R59	DRZ832011	RK73H 2A 100ΩF TD0804N
15R60, 15R61	DRZ833011	RK73H 2A 47ΩF TD0804N
15R62	DRZ832391	RK73H 2A 3.9KΩF TD0804N
15R63, 15R64	DRZ820161	RN73F 2A 120ΩD TD0804N
15R65	DRZ832011	RK73H 2A 100ΩF TD0804N
15R66	DRZ832171	RK73H 2A 470ΩF TD0804N
15R67	DRZ832141	RK73H 2A 360ΩF TD0804N
15R70, 15R71	DRZ833551	RK73H 2A 33ΩF TD0804N
15R72	DRZ833011	RK73H 2A 47ΩF TD0804N
15R73	DRZ832471	RK73H 2A 8.2KΩF TD0804N
15R74	DRZ832491	RK73H 2A 10KΩF TD0804N
15R80, 15R81	DRZ828721	RR1220P-224-B TD0804N
15R82	DRZ828731	RR1220P-244-B TD0804N

CAL SIGNAL 16

CIRCUIT REFERENCE	IWATSU PART NO.	DESCRIPTION
16C3, 16C5	DCC810511	C2012F 1H 103Z A TD84N
16C7, 16C10	DCC810511	C2012F 1H 103Z A TD84N
16C12	DCC819091	GRM42-6B 106K6.3PT TE0804N
16C15	DCC816521	C2012CH 1H 220J A TD84N
16C60 to 16C69	DCC810571	C2012F 1H 104Z A TD0804N
16C70 to 16C73	DCC816801	C2012CH 1H 102J A TD84N
16C74	DCC816601	C2012CH 1H 101J A TD84N
16C75 to 16C77	DCC816801	C2012CH 1H 102J A TD84N
16C80 to 16C83	DCC820121	EMK325F 106ZH-T TE0804N
16D1, 16D2	DDD810241	1SS 272 TE0804R
16IC1	DIC483031	74HC4051F TE1612B
16IC2	DIC614811	LT 1097S8-T2 TE1208B
16IC3	DIC619271	TA 75S558F (TE85L) TE0804L
16IC4	DIC499441	74HC4053F/AF TE1612B
16IC5	DIC448531	MC 74HC153F/AF
16IC6	DIC483321	74HC595F/AF TE1612B
16J2	KHB095411	SMALL PIN JACK
16L1 to 16L4	DCL811011	BLM21A121FPT TD0804N
16R1	DRZ828541	RN73F 2A 18KΩB TD0804N
16R2	DRZ828551	RN73F 2A 2KΩB TD0804N
16R3, 16R4	DRZ832311	RK73H 2A 1.8KΩF TD0804N
16R5	DRZ832321	RK73H 2A 2.0KΩF TD0804N
16R6	DRZ828581	RN73F 2A 560ΩB TD0804N
16R7	DRZ833511	RK73H 2A 22ΩF TD0804N
16R10	DRZ832491	RK73H 2A 10KΩF TD0804N
16R11	DRZ832351	RK73H 2A 2.7KΩF TD0804N
16R12	DRZ832331	RK73H 2A 2.2KΩF TD0804N
16R16 to 16R19	DRZ833061	RK73H 2A 75ΩF TD0804N
16R20 to 16R24	DRZ832071	RK73H 2A 180ΩF TD0804N
16R25	DRZ832031	RK73H 2A 120ΩF TD0804N

DC GENE 1/2 **17**

CIRCUIT REFERENCE	IWATSU PART NO.	DESCRIPTION
17C10, 17C12	DCC810511	C2012F 1H 103Z A TD84N
17C13	DCC810511	C2012F 1H 103Z A TD84N
17C16	DCC816601	C2012CH 1H 101J A TD84N
17C19, 17C22	DCC816641	C2012CH 1H 221J A TD84N
17C30	DCC810511	C2012F 1H 103Z A TD84N
17C33	DCC810571	C2012F 1H 104Z A TD0804N
17C35 to 17C39	DCC810571	C2012F 1H 104Z A TD0804N
17C50	DCC820021	C2012F 1C 105Z A TD84N
17C52 to 17C54	DCC820021	C2012F 1C 105Z A TD84N
17C55	DCC810571	C2012F 1H 104Z A TD0804N
17C56 to 17C60	DCC810571	C2012F 1H 104Z A TD0804N
17C61	DCC820021	C2012F 1C 105Z A TD84N
17C62	DCC810571	C2012F 1H 104Z A TD0804N
17C63	DCC820021	C2012F 1C 105Z A TD84N
17C64	DCC810571	C2012F 1H 104Z A TD0804N
17C65	DCC820021	C2012F 1C 105Z A TD84N
17C71, 17C73	DCE929471	SXE 16VB-220 TC04R
17IC1	DIC528501	□PD 78081GB-A67-3BS-MTX
17IC2	DIC645151	DAC 712UK
17IC3, 17IC4	DIC483031	74HC4051F TE1612B
17IC5	DIC619271	TA 75S558F (TE85L) TE0804L
17IC6	DIC639041	□PC 311G2-E1 TE1208F
17IC7	DIC614411	□PC 812G2-E1 TE1208F
17IC8	DIC499381	74HC138F/AF TE1612B
17IC9	DIC889101	TC 7SU04F TE0804L
17L1 to 17L3	DCL811011	BLM21A121FPT TD0804N
17Q1	DTR838661	2SC 2712LG TE85L
17R10	DRZ832101	RK73H 2A 240ΩF TD0804N
17R11	DRZ832081	RK73H 2A 200ΩF TD0804N
17R12	DRZ832501	RK73H 2A 11KΩF TD0804N
17R13	DRZ832461	RK73H 2A 7.5KΩF TD0804N
17R14	DRZ828561	RN73F 2A 3KΩB TD0804N
17R15	DRZ832241	RK73H 2A 910ΩF TD0804N
17R16	DRZ828531	RN73F 2A 1.2KΩB TD0804N
17R17, 17R18	DRZ832131	RK73H 2A 330ΩF TD0804N
17R19	DRZ832971	RK73H 2A 1.0MΩF TD0804N
17R21	DRZ832101	RK73H 2A 240ΩF TD0804N
17R22	DRZ832131	RK73H 2A 330ΩF TD0804N
17R23 to 17R25	DRZ832251	RK73H 2A 1.0KΩF TD0804N
17R26	DRZ832131	RK73H 2A 330ΩF TD0804N
17R30 to 17R34	DRZ832581	RK73H 2A 24KΩF TD0804N
17R35 to 17R39	DRZ832511	RK73H 2A 12KΩF TD0804N
17R40	DRZ831501	MCR10 000E TD0804N

DC GENE 2/2 18

CIRCUIT REFERENCE	IWATSU PART NO.	DESCRIPTION
18C1	DCF810121	ECHU 1C 104J TE0804N
18C2 to 18C7	DCC811111	C2012B 1E 104K A TD84N
18C8	DCF810121	ECHU 1C 104J TE0804N
18C9 to 18C11	DCC811111	C2012B 1E 104K A TD84N
18C12, 18C13	DCF810121	ECHU 1C 104J TE0804N
18C14 to 18C19	DCC811111	C2012B 1E 104K A TD84N
18C20	DCC810571	C2012F 1H 104Z A TD0804N
18C21	DCF810121	ECHU 1C 104J TE0804N
18C22	DCC811111	C2012B 1E 104K A TD84N
18C23, 18C24	DCC810571	C2012F 1H 104Z A TD0804N
18C50 to 18C53	DCC810571	C2012F 1H 104Z A TD0804N
18C55, 18C56	DCC810571	C2012F 1H 104Z A TD0804N
18C60 to 18C71	DCC810571	C2012F 1H 104Z A TD0804N
18IC1 to 18IC3	DIC483021	TC 4051BF (EL) TE1612B
18IC10 to 18IC13	DIC614761	TL 084CNS
18IC14	DIC614411	PC 812G2-E1 TE1208F
18IC16	DIC614761	TL 084CNS
18R1, 18R8	DRZ832071	RK73H 2A 180ΩF TD0804N
18R12, 18R13	DRZ832071	RK73H 2A 180ΩF TD0804N
18R19, 18R21	DRZ832071	RK73H 2A 180ΩF TD0804N
18R31	DRZ832011	RK73H 2A 100ΩF TD0804N
18RA1 to 18RA5	DFB810111	RAC16 4D 101J A TD0804M

MAIN CONT 1/2 19

CIRCUIT REFERENCE	IWATSU PART NO.	DESCRIPTION
19C10	DCC816641	C2012CH 1H 221J A TD84N
19C51 to 19C53	DCC810571	C2012F 1H 104Z A TD0804N
19C54	DCC820031	C2012F 1C 224Z A TD84N
19C55 to 19C59	DCC810571	C2012F 1H 104Z A TD0804N
19C60	DCC820031	C2012F 1C 224Z A TD84N
19C61, 19C62	DCC820021	C2012F 1C 105Z A TD84N
19C63	DCC820031	C2012F 1C 224Z A TD84N
19C64	DCC810571	C2012F 1H 104Z A TD0804N
19IC1	DIC471852	PALCE16V8H-10JC/4 K0327MBC
19IC2	DIC471881	PALCE16V8H-7JC/5 K0319HCS
19IC3	DIC471891	PALCE16V8H-7JC/5 K0320HMR
19IC4	DIC484011	74VHC138F EL TE1612B
19IC5	DIC449631	MC 74HC574F/AF
19IC6	DIC471871	PALCE16V8H-10JC/4 K0318MST
19IC7	DIC471861	PALCE16V8H-10JC/4 K0317MCG
19IC8	DIC645141	PCF 8584T TE2412B
19IC9	DIC483031	74HC4051F TE1612B
19IC10	DIC484491	74VHCT541AF EL TE2412B
19IC11	DIC471631	74VHCT573AF
19IC12	DIC484531	74VHC32F EL TE1612B
19IC13	DIC495111	74HCT245AF TE2412B
19IC14	DIC471901	PALCE16V8H-7JC/5 K0321HMS
19R1	DRZ831501	MCR10 000E TD0804N
19R2	DRZ832331	RK73H 2A 2.2KΩF TD0804N
19R3	DRZ832251	RK73H 2A 1.0KΩF TD0804N
19R4	DRZ832331	RK73H 2A 2.2KΩF TD0804N
19R5, 19R6	DRZ832251	RK73H 2A 1.0KΩF TD0804N
19R7	DRZ832011	RK73H 2A 100ΩF TD0804N
19R8	DRZ832251	RK73H 2A 1.0KΩF TD0804N
19R9	DRZ832331	RK73H 2A 2.2KΩF TD0804N
19R10	DRZ832131	RK73H 2A 330ΩF TD0804N
19R21, 19R22	DRZ832101	RK73H 2A 240ΩF TD0804N
19R24, 19R25	DRZ832101	RK73H 2A 240ΩF TD0804N
19R26, 19R27	DRZ832251	RK73H 2A 1.0KΩF TD0804N
19RA2, 19RA4	DFB810041	RAC16 4D 220J A TD0804M
19RA6	DFB810041	RAC16 4D 220J A TD0804M
19RA8	DFB810081	RAC16 4D 102J A TD0804M
19RA12	DFB810111	RAC16 4D 101J A TD0804M
19RA16	DFB810041	RAC16 4D 220J A TD0804M
19RA18	DFB810121	RAC16 4D 470J A TD0804M
19RA19, 19RA20	DFB810041	RAC16 4D 220J A TD0804M

MAIN CONT 2/2 [20]

CIRCUIT REFERENCE	IWATSU PART NO.	DESCRIPTION
20C3	DCC810511	C2012F 1H 103Z A TD84N
20C4, 20C5	DCC810571	C2012F 1H 104Z A TD0804N
20C6	DCE219051	SME-CE04W 1A 101M TC04R
20C31	DCC810511	C2012F 1H 103Z A TD84N
20C51 to 20C64	DCC810571	C2012F 1H 104Z A TD0804N
20C70, 20C71	DCC810571	C2012F 1H 104Z A TD0804N
20C80	DCC816801	C2012CH 1H 102J A TD84N
20IC1	DIC449631	MC 74HC574F/AF
20IC2 to 20IC6	DIC499381	74HC138F/AF TE1612B
20IC7	DIC499321	74HC04F/AF TE1612B
20IC8	DIC529201	AT93C66-10SC JEDEC TE1208B
20IC9	DIC470461	DS 1620S TE1612B
20IC10	DIC889161	TC 4W53F(TE12L) TE1208R
20IC11, 20IC12	DIC642201	MB88346BPF-G-BND-EF TE2412F
20IC13	DIC659371	NJM 431U-TE1 (JRC)
20IC14	DIC449631	MC 74HC574F/AF
20IC15	DIC619271	TA 75S558F (TE85L) TE0804L
20IC16	DIC889131	TC 7W32F(TE12L) TE1208R
20J1, 20J2	DCN129381	52808-2691 TE4412B
20J3, 20J4	DCN129391	52808-2291 TE4412B
20R3	DRZ832011	RK73H 2A 100ΩF TD0804N
20R4	DRZ832291	RK73H 2A 1.5KΩF TD0804N
20R5	DRZ820441	RN73F 2A 1.8KΩD TD0804N
20R6	DRZ820491	RN73F 2A 3KΩD TD0804N
20R7, 20R8	DRZ833011	RK73H 2A 47ΩF TD0804N
20R10 to 20R13	DRZ832331	RK73H 2A 2.2KΩF TD0804N
20R14	DRZ832011	RK73H 2A 100ΩF TD0804N
20R15, 20R16	DRZ832331	RK73H 2A 2.2KΩF TD0804N
20R17 to 20R19	DRZ832011	RK73H 2A 100ΩF TD0804N
20R22	DRZ832291	RK73H 2A 1.5KΩF TD0804N
20R24	DRZ832011	RK73H 2A 100ΩF TD0804N
20R30	DRZ820621	RN73F 2A 10KΩD TD0804N
20R31	DRZ820661	RN73F 2A 15KΩD TD0804N
20R32	DRZ832441	RK73H 2A 6.2KΩF TD0804N
20R33	DRZ832221	RK73H 2A 750ΩF TD0804N
20R34, 20R35	DRZ832491	RK73H 2A 10KΩF TD0804N
20R36, 20R37	DRZ832011	RK73H 2A 100ΩF TD0804N
20RA4 to 20RA8	DFB810111	RAC16 4D 101J A TD0804M
20RA10	DFB810111	RAC16 4D 101J A TD0804M

POWER CONNECTOR [21]

CIRCUIT REFERENCE	IWATSU PART NO.	DESCRIPTION
21C1 to 21C4	DCC810511	C2012F 1H 103Z A TD84N
21C10	DCE229221	SME-CE04W 1E 221M TC04R
21C11	DCC820031	C2012F 1C 224Z A TD84N
21C12	DCE229201	SME-CE04W 1E 470M TC04R
21C13	DCC820031	C2012F 1C 224Z A TD84N
21C18	DCE229201	SME-CE04W 1E 470M TC04R
21C19	DCC820031	C2012F 1C 224Z A TD84N
21C20	DCE219151	SME-CE04W 1A 471M TC04R
21C21	DCC820021	C2012F 1C 105Z A TD84N
21C30	DCE219051	SME-CE04W 1A 101M TC04R
21C31	DCC820031	C2012F 1C 224Z A TD84N
21C40	DCE219151	SME-CE04W 1A 471M TC04R
21C41	DCC820021	C2012F 1C 105Z A TD84N
21C50	DCE219051	SME-CE04W 1A 101M TC04R
21C51	DCC820031	C2012F 1C 224Z A TD84N
21C52	DCC810511	C2012F 1H 103Z A TD84N
21C60	DCE229221	SME-CE04W 1E 221M TC04R
21C61	DCC820031	C2012F 1C 224Z A TD84N
21C62	DCE229201	SME-CE04W 1E 470M TC04R
21C63	DCC820031	C2012F 1C 224Z A TD84N
21C68	DCE229201	SME-CE04W 1E 470M TC04R
21C69	DCC820031	C2012F 1C 224Z A TD84N
21C70	DCE219151	SME-CE04W 1A 471M TC04R
21C71	DCC820021	C2012F 1C 105Z A TD84N
21C80	DCE219051	SME-CE04W 1A 101M TC04R
21C81	DCC820031	C2012F 1C 224Z A TD84N
21C90	DCE219151	SME-CE04W 1A 471M TC04R
21C91	DCC820021	C2012F 1C 105Z A TD84N
21C100	DCE219051	SME-CE04W 1A 101M TC04R
21C101	DCC820031	C2012F 1C 224Z A TD84N
21C102, 21C103	DCC810511	C2012F 1H 103Z A TD84N
21C110 to 21C112	DCC810511	C2012F 1H 103Z A TD84N
21J1	DCN126021	CONNECTOR 53258-0610
21J2	DCN126081	CONNECTOR 53258-0710
21J3	DCN990911	CONNECTOR 5267-07A
21L10, 21L11	DCL119361	BL02RN2-R62 TD04N
21L14, 21L20	DCL119361	BL02RN2-R62 TD04N
21L25, 21L40	DCL119361	BL02RN2-R62 TD04N
21L41, 21L46	DCL119361	BL02RN2-R62 TD04N
21L60, 21L61	DCL119361	BL02RN2-R62 TD04N
21L64, 21L70	DCL119361	BL02RN2-R62 TD04N
21L75, 21L90	DCL119361	BL02RN2-R62 TD04N
21L91, 21L96	DCL119361	BL02RN2-R62 TD04N
21SW1	DSW017001	SPUP19

CH1 FRONT END [2]

CIRCUIT REFERENCE	IWATSU PART NO.	DESCRIPTION
2C1, 2C2	DCC816471	C2012CH 1H 080D A TD84N
2C3, 2C4	DCC850101	GRM42-6CH 050C500PT TE0804N
2C6	DCV819091	TZBX4 Z250BA110 TE1208R
2C7	DCC816521	C2012CH 1H 220J A TD84N
2C10	DCC850101	GRM42-6CH 050C500PT TE0804N
2C12	DCV819091	TZBX4 Z250BA110 TE1208R
2C13	DCC816521	C2012CH 1H 220J A TD84N
2C14	DCC816451	C2012CH 1H 060D A TD84N
2C15	DCC816381	C2012CH 1H 020C A TD84N
2C18	DCC816491	C2012CH 1H 100D A TD84N
2C19	DCC810511	C2012F 1H 103Z A TD84N
2C20	DCC840041	GHM1530B 473K250 TE0804N
2C21	DCC850011	GRM42-6 W5R 222K500 TE0804N
2C22	DCC850091	GRM42-6CH 020C500PT TE0804N
2C24	DCC816371	C2012CH 1H 1R5C A TD84N
2C25	DCV819051	TZBX4 Z030BA110 TE1208R
2C26	DCC811731	C1608B 1H 102K A TD0804N
2C27 to 2C29	DCC810511	C2012F 1H 103Z A TD84N
2C32 to 2C35	DCC810511	C2012F 1H 103Z A TD84N
2C36	DCC810571	C2012F 1H 104Z A TD0804N
2C37	DCC816451	C2012CH 1H 060D A TD84N
2C39	DCC816601	C2012CH 1H 101J A TD84N
2C40	DCC810571	C2012F 1H 104Z A TD0804N
2C41	DCC810981	C2012B 1H 153K A TD84N
2C42	DCC811161	C2012B 1H 333K A TD84N
2C43 to 2C46	DCC810511	C2012F 1H 103Z A TD84N
2C47	DCC811161	C2012B 1H 333K A TD84N
2C48	DCV819051	TZBX4 Z030BA110 TE1208R
2C49	DCC810511	C2012F 1H 103Z A TD84N
2C50	DCE919141	SRA 10VB-100 TC04R
2C51 to 2C53	DCC810511	C2012F 1H 103Z A TD84N
2C54, 2C55	DCC810571	C2012F 1H 104Z A TD0804N
2C58	DCC820021	C2012F 1C 105Z A TD84N
2C59, 2C60	DCC810511	C2012F 1H 103Z A TD84N
2C70 to 2C74	DCC816801	C2012CH 1H 102J A TD84N
2C75, 2C76	DCC820251	C2012B 1C 474K A TD0804N
2C80	DCC810571	C2012F 1H 104Z A TD0804N
2C81	DCC816371	C2012CH 1H 1R5C A TD84N
2C83 to 2C86	DCC820021	C2012F 1C 105Z A TD84N
2C87	DCC810511	C2012F 1H 103Z A TD84N
2C90 to 2C96	DCC810511	C2012F 1H 103Z A TD84N
2C99	DCC819091	GRM42-6B 106K6.3PT TE0804N
2D1, 2D2	DDD810461	HSM 124S-JTL TE0804L
2D3	DDD810081	1SS 226 (TE85L) TE0804L
2D4 to 2D6	DDD810241	1SS 272 TE0804R
2D7 to 2D9	DDD810461	HSM 124S-JTL TE0804L
2D10, 2D11	DDD810241	1SS 272 TE0804R
2FL1 to 2FL7	DCL870041	NFM39R12C222T1 TE0804N
2IC1	DIC614811	LT 1097S8-T2 TE1208B
2IC2	DIC619191	NJM 082M(TE3) TE1208L
2IC3	DIC614891	HFE428 1GHZ FRONT END
2IC4	DIC631231	HTR420 TRIGGER COMPARATOR
2IC5	DIC483321	74HC595F/AF TE1612B

CH1 FRONT END [2]

CIRCUIT REFERENCE	IWATSU PART NO.	DESCRIPTION
2IC6	DIC619271	TA 75S558F (TE85L) TE0804L
2J1A	DCN126091	7093XXP01 PROBUS CONNECTOR
2J1B	DCN045681	CONNECTOR BNC-BR-PC-1
2L1	DCL810831	HK1608 18NJ-T TD0804N
2L2	DCL811011	BLM21A121FPT TD0804N
2L3	DCL810811	HK1608 10NJ-T TD0804N
2L4	DCL811011	BLM21A121FPT TD0804N
2L11 to 2L14	DCL810811	HK1608 10NJ-T TD0804N
2Q1	DTR860161	2SK 508 K51 TE0804L
2Q2 to 2Q4	DTR830521	2SC 3583-T1B TE0804L
2Q5, 2Q6	DTR810041	2SA 1162Y TE85L
2Q7 to 2Q11	DTR890471	DTA114YK/RN2407 TE0804L
2Q12	DTR810041	2SA 1162Y TE85L
2Q14	DTR838661	2SC 2712LG TE85L
2Q15, 2Q16	DTR890581	DTC114YK/RN1407 TE0804L
2Q17, 2Q18	DTR810041	2SA 1162Y TE85L
2R1 to 2R10	DRZ820971	RN73G 2A 20ΩD TD0804N
2R11	DRZ833071	RK73H 2A 82ΩF TD0804N
2R12	DRZ833561	RK73H 2A 36ΩF TD0804N
2R13	DRZ832011	RK73H 2A 100ΩF TD0804N
2R14	DRZ831611	MCR10J 5R6E TD0804N
2R15 to 2R17	DRZ828721	RR1220P-224-B TD0804N
2R18	DRZ828731	RR1220P-244-B TD0804N
2R19	DRZ828711	RR1220P-114-B TD0804N
2R20	DRZ832261	RK73H 2A 1.1KΩF TD0804N
2R21	DRZ832081	RK73H 2A 200ΩF TD0804N
2R22	DRZ833581	RK73H 2A 43ΩF TD0804N
2R24	DRZ830861	MCR10J 300E TD0804N
2R25	DRZ833041	RK73H 2A 62ΩF TD0804N
2R26	DRZ828751	RR1220P-474-B TD0804N
2R27	DRZ828741	RR1220P-434-B TD0804N
2R28	DRZ828711	RR1220P-114-B TD0804N
2R29	DRZ832261	RK73H 2A 1.1KΩF TD0804N
2R30	DRZ832081	RK73H 2A 200ΩF TD0804N
2R31	DRZ833531	RK73H 2A 27ΩF TD0804N
2R32	DRZ831121	MCR10J 240E TD0804N
2R33	DRZ833581	RK73H 2A 43ΩF TD0804N
2R35 to 2R42	DRZ828761	RR1220P-204-D TD0804N
2R43	DRZ832121	RK73H 2A 300ΩF TD0804N
2R44	DRZ832011	RK73H 2A 100ΩF TD0804N
2R45	DRZ832031	RK73H 2A 120ΩF TD0804N
2R46, 2R47	DRZ831431	MCR10J 335E TD0804N
2R48	DRZ821291	RK73K 1J 150ΩJ TD0804N
2R49	DRZ820971	RN73G 2A 20ΩD TD0804N
2R50	DRZ832101	RK73H 2A 240ΩF TD0804N
2R51	DRZ830861	MCR10J 300E TD0804N
2R52	DDD089381	NTH5G20P35A221J07TE TE0804N
2R53	DRZ832531	RK73H 2A 15KΩF TD0804N
2R54	DRZ832251	RK73H 2A 1.0KΩF TD0804N
2R55	DRZ832441	RK73H 2A 6.2KΩF TD0804N
2R56	DRZ832251	RK73H 2A 1.0KΩF TD0804N
2R58	DRZ832051	RK73H 2A 150ΩF TD0804N
2R59	DRZ820971	RN73G 2A 20ΩD TD0804N

CH1 FRONT END 2

CIRCUIT REFERENCE	IWATSU PART NO.	DESCRIPTION
2R60 to 2R62	DRZ832201	RK73H 2A 620ΩF TD0804N
2R63	DRZ820971	RN73G 2A 20ΩD TD0804N
2R64 to 2R67	DRZ832091	RK73H 2A 220ΩF TD0804N
2R68	DRZ832601	RK73H 2A 30KΩF TD0804N
2R69	DRZ832401	RK73H 2A 4.3KΩF TD0804N
2R70	DRZ832281	RK73H 2A 1.3KΩF TD0804N
2R71	DRZ832031	RK73H 2A 120ΩF TD0804N
2R74, 2R75	DRZ828761	RR1220P-204-D TD0804N
2R76	DRZ828711	RR1220P-114-B TD0804N
2R77	DRZ832661	RK73H 2A 51KΩF TD0804N
2R78	DRV810251	G4AT/ST-4TA 5KΩ TE1208L
2R79	DRZ832011	RK73H 2A 100ΩF TD0804N
2R80	DRZ832251	RK73H 2A 1.0KΩF TD0804N
2R81, 2R82	DRZ820861	RN73F 2A 100KΩD TD0804N
2R83	DRZ832321	RK73H 2A 2.0KΩF TD0804N
2R84	DRZ832301	RK73H 2A 1.6KΩF TD0804N
2R85	DDD074121	LP310 1F 202F 302 TE0804N
2R86	DRZ832491	RK73H 2A 10KΩF TD0804N
2R87	DDD074121	LP310 1F 202F 302 TE0804N
2R88	DRZ832491	RK73H 2A 10KΩF TD0804N
2R89	DRZ832251	RK73H 2A 1.0KΩF TD0804N
2R90	DRZ832491	RK73H 2A 10KΩF TD0804N
2R91	DRZ828571	RN73F 2A 510ΩB TD0804N
2R92	DRZ833021	RK73H 2A 51ΩF TD0804N
2R93	DRZ833551	RK73H 2A 33ΩF TD0804N
2R95	DRZ833061	RK73H 2A 75ΩF TD0804N
2R97	DRZ832291	RK73H 2A 1.5KΩF TD0804N
2R98	DRZ832471	RK73H 2A 8.2KΩF TD0804N
2R100	DRZ832301	RK73H 2A 1.6KΩF TD0804N
2R101	DRZ832191	RK73H 2A 560ΩF TD0804N
2R105	DRZ832351	RK73H 2A 2.7KΩF TD0804N
2R106	DRZ832191	RK73H 2A 560ΩF TD0804N
2R107	DRZ832351	RK73H 2A 2.7KΩF TD0804N
2R108	DRZ832191	RK73H 2A 560ΩF TD0804N
2R109	DRZ832011	RK73H 2A 100ΩF TD0804N
2R110	DRZ832321	RK73H 2A 2.0KΩF TD0804N
2R115, 2R116	DRZ833021	RK73H 2A 51ΩF TD0804N
2R120	DRZ832251	RK73H 2A 1.0KΩF TD0804N
2R123 to 2R125	DRZ832011	RK73H 2A 100ΩF TD0804N
2R126	DRZ832251	RK73H 2A 1.0KΩF TD0804N
2R127	DRZ832391	RK73H 2A 3.9KΩF TD0804N
2R128	DRZ832121	RK73H 2A 300ΩF TD0804N
2R129	DRZ832251	RK73H 2A 1.0KΩF TD0804N
2R130	DRZ832391	RK73H 2A 3.9KΩF TD0804N
2R131	DRZ832121	RK73H 2A 300ΩF TD0804N
2RL1, 2RL2	DKD028511	NAS-5W-K-TN-B05 TE2416B
2RL3, 2RL4	DKD030381	NASL-5W-K-TN TE2416B
2RL5	DKD028511	NAS-5W-K-TN-B05 TE2416B

CH2 FRONT END 3

CIRCUIT REFERENCE	IWATSU PART NO.	DESCRIPTION
3C1, 3C2	DCC816471	C2012CH 1H 080D A TD84N
3C3, 3C4	DCC850101	GRM42-6CH 050C500PT TE0804N
3C6	DCV819091	TZBX4 Z250BA110 TE1208R
3C7	DCC816521	C2012CH 1H 220J A TD84N
3C10	DCC850101	GRM42-6CH 050C500PT TE0804N
3C12	DCV819091	TZBX4 Z250BA110 TE1208R
3C13	DCC816521	C2012CH 1H 220J A TD84N
3C14	DCC816451	C2012CH 1H 060D A TD84N
3C15	DCC816381	C2012CH 1H 020C A TD84N
3C18	DCC816491	C2012CH 1H 100D A TD84N
3C19	DCC810511	C2012F 1H 103Z A TD84N
3C20	DCC840041	GHM1530B 473K250 TE0804N
3C21	DCC850011	GRM42-6 W5R 222K500 TE0804N
3C22	DCC850091	GRM42-6CH 020C500PT TE0804N
3C24	DCC816371	C2012CH 1H 1R5C A TD84N
3C25	DCV819051	TZBX4 Z030BA110 TE1208R
3C26	DCC811731	C1608B 1H 102K A TD0804N
3C27 to 3C29	DCC810511	C2012F 1H 103Z A TD84N
3C32 to 3C35	DCC810511	C2012F 1H 103Z A TD84N
3C36	DCC810571	C2012F 1H 104Z A TD0804N
3C37	DCC816451	C2012CH 1H 060D A TD84N
3C39	DCC816601	C2012CH 1H 101J A TD84N
3C40	DCC810571	C2012F 1H 104Z A TD0804N
3C41	DCC810981	C2012B 1H 153K A TD84N
3C42	DCC811161	C2012B 1H 333K A TD84N
3C43 to 3C46	DCC810511	C2012F 1H 103Z A TD84N
3C47	DCC811161	C2012B 1H 333K A TD84N
3C48	DCV819051	TZBX4 Z030BA110 TE1208R
3C49	DCC810511	C2012F 1H 103Z A TD84N
3C50	DCE919141	SRA 10VB-100 TC04R
3C51 to 3C53	DCC810511	C2012F 1H 103Z A TD84N
3C54, 3C55	DCC810571	C2012F 1H 104Z A TD0804N
3C58	DCC820021	C2012F 1C 105Z A TD84N
3C59, 3C60	DCC810511	C2012F 1H 103Z A TD84N
3C70 to 3C74	DCC816801	C2012CH 1H 102J A TD84N
3C75, 3C76	DCC820251	C2012B 1C 474K A TD0804N
3C80	DCC810571	C2012F 1H 104Z A TD0804N
3C81	DCC816371	C2012CH 1H 1R5C A TD84N
3C83 to 3C86	DCC820021	C2012F 1C 105Z A TD84N
3C87	DCC810511	C2012F 1H 103Z A TD84N
3C90 to 3C96	DCC810511	C2012F 1H 103Z A TD84N
3C99	DCC819091	GRM42-6B 106K6.3PT TE0804N
3D1, 3D2	DDD810461	HSM 124S-JTL TE0804L
3D3	DDD810081	1SS 226 (TE85L) TE0804L
3D4 to 3D6	DDD810241	1SS 272 TE0804R
3D7 to 3D9	DDD810461	HSM 124S-JTL TE0804L
3D10, 3D11	DDD810241	1SS 272 TE0804R
3FL1 to 3FL7	DCL870041	NFM39R12C222T1 TE0804N
3IC1	DIC614811	LT 1097S8-T2 TE1208B
3IC2	DIC619191	NJM 082M(TE3) TE1208L
3IC3	DIC614891	HFE428 1GHZ FRONT END
3IC4	DIC631231	HTR420 TRIGGER COMPARATOR

CH2 FRONT END 3

CIRCUIT REFERENCE	IWATSU PART NO.	DESCRIPTION
3IC5	DIC483321	74HC595F/AF TE1612B
3IC6	DIC619271	TA 75S558F (TE85L) TE0804L
3J1A	DCN126091	7093XXP01 PROBUS CONNECTOR
3J1B	DCN045681	CONNECTOR BNC-BR-PC-1
3L1	DCL810831	HK1608 18NJ-T TD0804N
3L2	DCL811011	BLM21A121FPT TD0804N
3L3	DCL810811	HK1608 10NJ-T TD0804N
3L4	DCL811011	BLM21A121FPT TD0804N
3L11 to 3L14	DCL810811	HK1608 10NJ-T TD0804N
3L15 to 3L18	DRZ831801	MCR03 EZH J000E TD0804N
3Q1	DTR860161	2SK 508 K51 TE0804L
3Q2 to 3Q4	DTR830521	2SC 3583-T1B TE0804L
3Q5, 3Q6	DTR810041	2SA 1162Y TE85L
3Q7 to 3Q11	DTR890471	DTA114YK/RN2407 TE0804L
3Q12	DTR810041	2SA 1162Y TE85L
3Q14	DTR838661	2SC 2712LG TE85L
3Q15, 3Q16	DTR890581	DTC114YK/RN1407 TE0804L
3Q17, 3Q18	DTR810041	2SA 1162Y TE85L
3R1 to 3R10	DRZ820971	RN73G 2A 20ΩD TD0804N
3R11	DRZ833071	RK73H 2A 82ΩF TD0804N
3R12	DRZ833561	RK73H 2A 36ΩF TD0804N
3R13	DRZ832011	RK73H 2A 100ΩF TD0804N
3R15 to 3R17	DRZ828721	RR1220P-224-B TD0804N
3R18	DRZ828731	RR1220P-244-B TD0804N
3R19	DRZ828711	RR1220P-114-B TD0804N
3R20	DRZ832261	RK73H 2A 1.1KΩF TD0804N
3R21	DRZ832081	RK73H 2A 200ΩF TD0804N
3R22	DRZ833581	RK73H 2A 43ΩF TD0804N
3R24	DRZ830861	MCR10J 300E TD0804N
3R25	DRZ833041	RK73H 2A 62ΩF TD0804N
3R26	DRZ828751	RR1220P-474-B TD0804N
3R27	DRZ828741	RR1220P-434-B TD0804N
3R28	DRZ828711	RR1220P-114-B TD0804N
3R29	DRZ832261	RK73H 2A 1.1KΩF TD0804N
3R30	DRZ832081	RK73H 2A 200ΩF TD0804N
3R31	DRZ833531	RK73H 2A 27ΩF TD0804N
3R32	DRZ831121	MCR10J 240E TD0804N
3R33	DRZ833581	RK73H 2A 43ΩF TD0804N
3R35 to 3R42	DRZ828761	RR1220P-204-D TD0804N
3R43	DRZ832121	RK73H 2A 300ΩF TD0804N
3R44	DRZ832011	RK73H 2A 100ΩF TD0804N
3R45	DRZ832031	RK73H 2A 120ΩF TD0804N
3R46, 3R47	DRZ831431	MCR10J 335E TD0804N
3R48	DRZ821291	RK73K 1J 150ΩJ TD0804N
3R49	DRZ820971	RN73G 2A 20ΩD TD0804N
3R50	DRZ832101	RK73H 2A 240ΩF TD0804N
3R51	DRZ830861	MCR10J 300E TD0804N
3R52	DDD089381	NTH5G20P35A221J07TE TE0804N
3R53	DRZ832531	RK73H 2A 15KΩF TD0804N
3R54	DRZ832251	RK73H 2A 1.0KΩF TD0804N
3R55	DRZ832441	RK73H 2A 6.2KΩF TD0804N
3R56	DRZ832251	RK73H 2A 1.0KΩF TD0804N
3R58	DRZ832051	RK73H 2A 150ΩF TD0804N

CH2 FRONT END 3

CIRCUIT REFERENCE	IWATSU PART NO.	DESCRIPTION
3R59	DRZ820971	RN73G 2A 20ΩD TD0804N
3R60 to 3R62	DRZ832201	RK73H 2A 620ΩF TD0804N
3R63	DRZ820971	RN73G 2A 20ΩD TD0804N
3R64 to 3R67	DRZ832091	RK73H 2A 220ΩF TD0804N
3R68	DRZ832601	RK73H 2A 30KΩF TD0804N
3R69	DRZ832401	RK73H 2A 4.3KΩF TD0804N
3R70	DRZ832281	RK73H 2A 1.3KΩF TD0804N
3R71	DRZ832031	RK73H 2A 120ΩF TD0804N
3R74, 3R75	DRZ828761	RR1220P-204-D TD0804N
3R76	DRZ828711	RR1220P-114-B TD0804N
3R77	DRZ832661	RK73H 2A 51KΩF TD0804N
3R78	DRV810251	G4AT/ST-4TA 5KΩ TE1208L
3R79	DRZ832011	RK73H 2A 100ΩF TD0804N
3R80	DRZ832251	RK73H 2A 1.0KΩF TD0804N
3R81, 3R82	DRZ820861	RN73F 2A 100KΩD TD0804N
3R83	DRZ832321	RK73H 2A 2.0KΩF TD0804N
3R84	DRZ832301	RK73H 2A 1.6KΩF TD0804N
3R85	DDD074121	LP310 1F 202F 302 TE0804N
3R86	DRZ832491	RK73H 2A 10KΩF TD0804N
3R87	DDD074121	LP310 1F 202F 302 TE0804N
3R88	DRZ832491	RK73H 2A 10KΩF TD0804N
3R89	DRZ832251	RK73H 2A 1.0KΩF TD0804N
3R90	DRZ832491	RK73H 2A 10KΩF TD0804N
3R91	DRZ828571	RN73F 2A 510ΩB TD0804N
3R92	DRZ833021	RK73H 2A 51ΩF TD0804N
3R93	DRZ833551	RK73H 2A 33ΩF TD0804N
3R95	DRZ833061	RK73H 2A 75ΩF TD0804N
3R97	DRZ832291	RK73H 2A 1.5KΩF TD0804N
3R98	DRZ832471	RK73H 2A 8.2KΩF TD0804N
3R100	DRZ832301	RK73H 2A 1.6KΩF TD0804N
3R101	DRZ832191	RK73H 2A 560ΩF TD0804N
3R105	DRZ832351	RK73H 2A 2.7KΩF TD0804N
3R106	DRZ832191	RK73H 2A 560ΩF TD0804N
3R107	DRZ832351	RK73H 2A 2.7KΩF TD0804N
3R108	DRZ832191	RK73H 2A 560ΩF TD0804N
3R109	DRZ832011	RK73H 2A 100ΩF TD0804N
3R110	DRZ832321	RK73H 2A 2.0KΩF TD0804N
3R120	DRZ832251	RK73H 2A 1.0KΩF TD0804N
3R123 to 3R125	DRZ832011	RK73H 2A 100ΩF TD0804N
3R126	DRZ832251	RK73H 2A 1.0KΩF TD0804N
3R127	DRZ832391	RK73H 2A 3.9KΩF TD0804N
3R128	DRZ832121	RK73H 2A 300ΩF TD0804N
3R129	DRZ832251	RK73H 2A 1.0KΩF TD0804N
3R130	DRZ832391	RK73H 2A 3.9KΩF TD0804N
3R131	DRZ832121	RK73H 2A 300ΩF TD0804N
3RL1, 3RL2	DKD028511	NAS-5W-K-TN-B05 TE2416B
3RL3, 3RL4	DKD030381	NASL-5W-K-TN TE2416B
3RL5	DKD028511	NAS-5W-K-TN-B05 TE2416B

EXT TRIGGER 6

CIRCUIT REFERENCE	IWATSU PART NO.	DESCRIPTION
6C1	DCC816451	C2012CH 1H 060D A TD84N
6C2	DCC816491	C2012CH 1H 100D A TD84N
6C3, 6C4	DCC850101	GRM42-6CH 050C500PT TE0804N
6C5	DCC816401	C2012CH 1H 030C A TD84N
6C6	DCV819091	TZBX4 Z250BA110 TE1208R
6C7	DCC816531	C2012CH 1H 270J A TD84N
6C18	DCC816491	C2012CH 1H 100D A TD84N
6C19	DCC810511	C2012F 1H 103Z A TD84N
6C21	DCC850011	GRM42-6 W5R 222K500 TE0804N
6C22	DCC850091	GRM42-6CH 020C500PT TE0804N
6C24	DCC816381	C2012CH 1H 020C A TD84N
6C25	DCV819051	TZBX4 Z030BA110 TE1208R
6C26	DCC816801	C2012CH 1H 102J A TD84N
6C27 to 6C29	DCC810511	C2012F 1H 103Z A TD84N
6C32 to 6C34	DCC810511	C2012F 1H 103Z A TD84N
6C36	DCC810511	C2012F 1H 103Z A TD84N
6C37	DCC816801	C2012CH 1H 102J A TD84N
6C39	DCC816601	C2012CH 1H 101J A TD84N
6C40	DCC810571	C2012F 1H 104Z A TD0804N
6C41	DCC810981	C2012B 1H 153K A TD84N
6C42	DCC811161	C2012B 1H 333K A TD84N
6C43, 6C44	DCC810511	C2012F 1H 103Z A TD84N
6C47	DCC820021	C2012F 1C 105Z A TD84N
6C50	DCE919141	SRA 10VB-100 TC04R
6C51 to 6C53	DCC810511	C2012F 1H 103Z A TD84N
6C54, 6C55	DCC810571	C2012F 1H 104Z A TD0804N
6C58	DCC820021	C2012F 1C 105Z A TD84N
6C59 to 6C64	DCC810511	C2012F 1H 103Z A TD84N
6C65	DCC811111	C2012B 1E 104K A TD84N
6C66	DCC810511	C2012F 1H 103Z A TD84N
6C67	DCC816601	C2012CH 1H 101J A TD84N
6C68, 6C69	DCC810511	C2012F 1H 103Z A TD84N
6C70 to 6C72	DCC816801	C2012CH 1H 102J A TD84N
6C75	DCC820251	C2012B 1C 474K A TD0804N
6C80	DCC810571	C2012F 1H 104Z A TD0804N
6C90 to 6C96	DCC810511	C2012F 1H 103Z A TD84N
6C99	DCC819091	GRM42-6B 106K6.3PT TE0804N
6D1,6D2	DDD810461	HSM 124S-JTL TE0804L
6D3	DDD810081	1SS 226 (TE85L) TE0804L
6D5, 6D6	DDD810241	1SS 272 TE0804R
6D7 to 6D9	DDD810461	HSM 124S-JTL TE0804L
6D10	DDD810241	1SS 272 TE0804R
6D11	DDD810131	1SS 269 TE0804L
6FL1 to 6FL4	DCL870041	NFM39R12C222T1 TE0804N
6FL7	DCL870041	NFM39R12C222T1 TE0804N
6FL10 to 6FL13	DCL870021	NFM41P11C204 TE1204N
6IC1	DIC614811	LT 1097S8-T2 TE1208B
6IC2, 6IC3	DIC619101	NJM 4558M(TE3) TE1208L
6IC4	DIC631231	HTR420 TRIGGER COMPARATOR
6IC5	DIC483321	74HC595F/AF TE1612B
6IC6	DIC322631	MC 10EL16D
6J1A	DCN126091	7093XXP01 PROBUS CONNECTOR

EXT TRIGGER 6

CIRCUIT REFERENCE	IWATSU PART NO.	DESCRIPTION
6J1B	DCN045681	CONNECTOR BNC-BR-PC-1
6L1	DCL810831	HK1608 18NJ-T TD0804N
6L2, 6L4	DCL811011	BLM21A121FPT TD0804N
6Q1	DTR860161	2SK 508 K51 TE0804L
6Q2 to 6Q4	DTR830521	2SC 3583-T1B TE0804L
6Q5, 6Q6	DTR810041	2SA 1162Y TE85L
6Q7 to 6Q9	DTR890471	DTA114YK/RN2407 TE0804L
6Q10	DTR830521	2SC 3583-T1B TE0804L
6Q12	DTR810041	2SA 1162Y TE85L
6Q14	DTR838661	2SC 2712LG TE85L
6Q15	DTR890581	DTC114YK/RN1407 TE0804L
6Q17	DTR810041	2SA 1162Y TE85L
6R1 to 6R10	DRZ820971	RN73G 2A 20ΩD TD0804N
6R11	DRZ833071	RK73H 2A 82ΩF TD0804N
6R12	DRZ833531	RK73H 2A 27ΩF TD0804N
6R13	DRZ832151	RK73H 2A 390ΩF TD0804N
6R14	DRZ830861	MCR10J 300E TD0804N
6R15 to 6R17	DRZ828721	RR1220P-224-B TD0804N
6R18	DRZ828731	RR1220P-244-B TD0804N
6R19	DRZ828711	RR1220P-114-B TD0804N
6R20	DRZ832261	RK73H 2A 1.1KΩF TD0804N
6R21	DRZ832091	RK73H 2A 220ΩF TD0804N
6R22	DRZ820971	RN73G 2A 20ΩD TD0804N
6R24	DRZ833031	RK73H 2A 56ΩF TD0804N
6R35 to 6R39	DRZ828761	RR1220P-204-D TD0804N
6R44	DRZ832011	RK73H 2A 100ΩF TD0804N
6R45	DRZ832051	RK73H 2A 150ΩF TD0804N
6R46, 6R47	DRZ831431	MCR10J 335E TD0804N
6R48	DRZ833021	RK73H 2A 51ΩF TD0804N
6R49	DRZ820971	RN73G 2A 20ΩD TD0804N
6R50	DRZ832101	RK73H 2A 240ΩF TD0804N
6R51	DRZ830861	MCR10J 300E TD0804N
6R53	DRZ832531	RK73H 2A 15KΩF TD0804N
6R54	DRZ832251	RK73H 2A 1.0KΩF TD0804N
6R55	DRZ832441	RK73H 2A 6.2KΩF TD0804N
6R56	DRZ832251	RK73H 2A 1.0KΩF TD0804N
6R58	DRZ832051	RK73H 2A 150ΩF TD0804N
6R59	DRZ820971	RN73G 2A 20ΩD TD0804N
6R60 to 6R62	DRZ832201	RK73H 2A 620ΩF TD0804N
6R63	DRZ820971	RN73G 2A 20ΩD TD0804N
6R64 to 6R67	DRZ832101	RK73H 2A 240ΩF TD0804N
6R68	DRZ832601	RK73H 2A 30KΩF TD0804N
6R69	DRZ832411	RK73H 2A 4.7KΩF TD0804N
6R70	DRZ832101	RK73H 2A 240ΩF TD0804N
6R72	DRZ831121	MCR10J 240E TD0804N
6R74	DRZ828761	RR1220P-204-D TD0804N
6R76	DRZ828711	RR1220P-114-B TD0804N
6R77	DRZ832251	RK73H 2A 1.0KΩF TD0804N
6R78	DRZ832661	RK73H 2A 51KΩF TD0804N
6R79	DRZ832391	RK73H 2A 3.9KΩF TD0804N
6R80	DRZ832631	RK73H 2A 39KΩF TD0804N
6R81	DRZ832361	RK73H 2A 3.0KΩF TD0804N

EXT TRIGGER 6

CIRCUIT REFERENCE	IWATSU PART NO.	DESCRIPTION
6R83	DRZ832321	RK73H 2A 2.0KΩF TD0804N
6R84	DRZ832301	RK73H 2A 1.6KΩF TD0804N
6R85	DDD074121	LP310 1F 202F 302 TE0804N
6R86	DRZ832491	RK73H 2A 10KΩF TD0804N
6R87	DDD074121	LP310 1F 202F 302 TE0804N
6R88	DRZ832491	RK73H 2A 10KΩF TD0804N
6R89	DRZ832251	RK73H 2A 1.0KΩF TD0804N
6R90	DRZ832491	RK73H 2A 10KΩF TD0804N
6R91	DRZ828571	RN73F 2A 510ΩB TD0804N
6R92	DRZ833021	RK73H 2A 51ΩF TD0804N
6R93	DRZ833011	RK73H 2A 47ΩF TD0804N
6R97	DRZ832291	RK73H 2A 1.5KΩF TD0804N
6R98	DRZ832471	RK73H 2A 8.2KΩF TD0804N
6R100	DRZ831121	MCR10J 240E TD0804N
6R101	DRZ832421	RK73H 2A 5.1KΩF TD0804N
6R105	DRZ832331	RK73H 2A 2.2KΩF TD0804N
6R106	DRZ832191	RK73H 2A 560ΩF TD0804N
6R107	DRZ832331	RK73H 2A 2.2KΩF TD0804N
6R108	DRZ832191	RK73H 2A 560ΩF TD0804N
6R109	DRZ832011	RK73H 2A 100ΩF TD0804N
6R110	DRZ832321	RK73H 2A 2.0KΩF TD0804N
6R120	DRZ832251	RK73H 2A 1.0KΩF TD0804N
6R123 to 6R125	DRZ832011	RK73H 2A 100ΩF TD0804N
6R126	DRZ832251	RK73H 2A 1.0KΩF TD0804N
6R127	DRZ832391	RK73H 2A 3.9KΩF TD0804N
6R128	DRZ832121	RK73H 2A 300ΩF TD0804N
6R150	DRZ832011	RK73H 2A 100ΩF TD0804N
6R151, 6R152	DRZ832491	RK73H 2A 10KΩF TD0804N
6R154	DRZ820971	RN73G 2A 20ΩD TD0804N
6R155, 6R156	DRZ832251	RK73H 2A 1.0KΩF TD0804N
6R157	DRZ832051	RK73H 2A 150ΩF TD0804N
6R158 to 6R161	DRZ832491	RK73H 2A 10KΩF TD0804N
6R162	DRZ832081	RK73H 2A 200ΩF TD0804N
6R163	DRZ832321	RK73H 2A 2.0KΩF TD0804N
6RL1, 6RL2	DKD028511	NAS-5W-K-TN-B05 TE2416B
6RL3	DKD030381	NASL-5W-K-TN TE2416B

CH1 A/D CNVT 7

CIRCUIT REFERENCE	IWATSU PART NO.	DESCRIPTION
7C1	DCC810511	C2012F 1H 103Z A TD84N
7C3	DCC816641	C2012CH 1H 221J A TD84N
7C5	DCC820021	C2012F 1C 105Z A TD84N
7C6, 7C11, 7C12	DCC810511	C2012F 1H 103Z A TD84N
7C13	DCC820021	C2012F 1C 105Z A TD84N
7C20	DCC810511	C2012F 1H 103Z A TD84N
7C22	DCC810571	C2012F 1H 104Z A TD0804N
7C30	DCC820021	C2012F 1C 105Z A TD84N
7C31, 7C32	DCC810571	C2012F 1H 104Z A TD0804N
7C40, 7C46	DCC820021	C2012F 1C 105Z A TD84N
7C47	DCC810511	C2012F 1H 103Z A TD84N
7C50	DCC816801	C2012CH 1H 102J A TD84N
7C51	DCC820121	EMK325F 106ZH-T TE0804N
7C52 to 7C54	DCC810511	C2012F 1H 103Z A TD84N
7C55	DCE219051	SME-CE04W 1A 101M TC04R
7C56	DCC810511	C2012F 1H 103Z A TD84N
7C57 to 7C59	DCC820121	EMK325F 106ZH-T TE0804N
7C60	DCC810571	C2012F 1H 104Z A TD0804N
7C61 to 7C63	DCC810511	C2012F 1H 103Z A TD84N
7C64	DCC820121	EMK325F 106ZH-T TE0804N
7C65	DCC810571	C2012F 1H 104Z A TD0804N
7C66	DCC810511	C2012F 1H 103Z A TD84N
7C67	DCE219151	SME-CE04W 1A 471M TC04R
7C68, 7C69	DCC820121	EMK325F 106ZH-T TE0804N
7C70 to 7C73	DCC810571	C2012F 1H 104Z A TD0804N
7C74	DCC820121	EMK325F 106ZH-T TE0804N
7C80	DCE219051	SME-CE04W 1A 101M TC04R
7C81, 7C83	DCC820031	C2012F 1C 224Z A TD84N
7C84	DCE219051	SME-CE04W 1A 101M TC04R
7C85	DCC820031	C2012F 1C 224Z A TD84N
7C86	DCE229201	SME-CE04W 1E 470M TC04R
7C87	DCC820031	C2012F 1C 224Z A TD84N
7C88	DCE229201	SME-CE04W 1E 470M TC04R
7C89	DCC820031	C2012F 1C 224Z A TD84N
7C90 to 7C92	DCC810571	C2012F 1H 104Z A TD0804N
7C94, 7C95	DCC810511	C2012F 1H 103Z A TD84N
7C96	DCC810571	C2012F 1H 104Z A TD0804N
7FL1 to 7FL3	DCL870021	NFM41P11C204 TE1204N
7IC1	DIC642371	HAD626 500MS/S ADC
7IC2	DIC619101	NJM 4558M(TE3) TE1208L
7IC3, 7IC4	DIC619271	TA 75S558F (TE85L) TE0804L
7J1	DCN126131	89177-5600
7L4 to 7L8	DCL119361	BL02RN2-R62 TD04N
7Q1	DTR890841	IMX3 TE0804R
7Q2, 7Q3	DTR830481	2SC 2873-Y TE1208L
7Q4	DTR129011	2SB 605K/L TRB
7Q5	DTR810161	2SA 1213-Y TE12L
7R1	DRZ832531	RK73H 2A 15KΩF TD0804N
7R2	DRZ832721	RK73H 2A 91KΩF TD0804N
7R3	DRZ832361	RK73H 2A 3.0KΩF TD0804N
7R4	DRZ832341	RK73H 2A 2.4KΩF TD0804N
7R10	DRZ832491	RK73H 2A 10KΩF TD0804N
7R11	DRZ832321	RK73H 2A 2.0KΩF TD0804N

CH1 A/D CNVT [7]

CIRCUIT REFERENCE	IWATSU PART NO.	DESCRIPTION
7R12	DRZ832301	RK73H 2A 1.6KΩF TD0804N
7R13	DRZ833061	RK73H 2A 75ΩF TD0804N
7R14	DRZ832051	RK73H 2A 150ΩF TD0804N
7R15 to 7R17	DRZ832251	RK73H 2A 1.0KΩF TD0804N
7R20	DRZ832341	RK73H 2A 2.4KΩF TD0804N
7R21	DRZ832481	RK73H 2A 9.1KΩF TD0804N
7R22	DRZ832311	RK73H 2A 1.8KΩF TD0804N
7R25	DRZ832251	RK73H 2A 1.0KΩF TD0804N
7R26	DRZ832211	RK73H 2A 680ΩF TD0804N
7R30	DRZ832321	RK73H 2A 2.0KΩF TD0804N
7R31	DRZ832311	RK73H 2A 1.8KΩF TD0804N
7R32, 7R33	DRZ833061	RK73H 2A 75ΩF TD0804N
7R34	DRZ833551	RK73H 2A 33ΩF TD0804N
7R35	DRZ832251	RK73H 2A 1.0KΩF TD0804N
7R40 to 7R43	DRZ833491	RK73H 2A 18ΩF TD0804N
7R46, 7R47	DRZ832351	RK73H 2A 2.7KΩF TD0804N
7R48, 7R49	DRZ832281	RK73H 2A 1.3KΩF TD0804N
7R50	DRZ832171	RK73H 2A 470ΩF TD0804N
7R51	DRZ832351	RK73H 2A 2.7KΩF TD0804N
7R52	DRZ832121	RK73H 2A 300ΩF TD0804N
7R53	DRZ832111	RK73H 2A 270ΩF TD0804N
7R54	DRZ831591	MCR10J 4R7E TD0804N

CH2 A/D CNVT [8]

CIRCUIT REFERENCE	IWATSU PART NO.	DESCRIPTION
8C1	DCC810511	C2012F 1H 103Z A TD84N
8C3	DCC816641	C2012CH 1H 221J A TD84N
8C5	DCC820021	C2012F 1C 105Z A TD84N
8C6, 8C11, 8C12	DCC810511	C2012F 1H 103Z A TD84N
8C13	DCC820021	C2012F 1C 105Z A TD84N
8C20	DCC810511	C2012F 1H 103Z A TD84N
8C22	DCC810571	C2012F 1H 104Z A TD0804N
8C30	DCC820021	C2012F 1C 105Z A TD84N
8C31, 8C32	DCC810571	C2012F 1H 104Z A TD0804N
8C40, 8C46	DCC820021	C2012F 1C 105Z A TD84N
8C47	DCC810511	C2012F 1H 103Z A TD84N
8C50	DCC816801	C2012CH 1H 102J A TD84N
8C51	DCC820121	EMK325F 106ZH-T TE0804N
8C52 to 8C54	DCC810511	C2012F 1H 103Z A TD84N
8C55	DCE219051	SME-CE04W 1A 101M TC04R
8C56	DCC810511	C2012F 1H 103Z A TD84N
8C57 to 8C59	DCC820121	EMK325F 106ZH-T TE0804N
8C60	DCC810571	C2012F 1H 104Z A TD0804N
8C61 to 8C63	DCC810511	C2012F 1H 103Z A TD84N
8C64	DCC820121	EMK325F 106ZH-T TE0804N
8C65	DCC810571	C2012F 1H 104Z A TD0804N
8C66	DCC810511	C2012F 1H 103Z A TD84N
8C67	DCE219151	SME-CE04W 1A 471M TC04R
8C68, 8C69	DCC820121	EMK325F 106ZH-T TE0804N
8C70 to 8C73	DCC810571	C2012F 1H 104Z A TD0804N
8C74	DCC820121	EMK325F 106ZH-T TE0804N
8C80	DCE219051	SME-CE04W 1A 101M TC04R
8C81, 8C83	DCC820031	C2012F 1C 224Z A TD84N
8C84	DCE219051	SME-CE04W 1A 101M TC04R
8C85	DCC820031	C2012F 1C 224Z A TD84N
8C86	DCE229201	SME-CE04W 1E 470M TC04R
8C87	DCC820031	C2012F 1C 224Z A TD84N
8C88	DCE229201	SME-CE04W 1E 470M TC04R
8C89	DCC820031	C2012F 1C 224Z A TD84N
8C90 to 8C92	DCC810571	C2012F 1H 104Z A TD0804N
8C94, 8C95	DCC810511	C2012F 1H 103Z A TD84N
8C96	DCC810571	C2012F 1H 104Z A TD0804N
8FL1 to 8FL3	DCL870021	NFM41P11C204 TE1204N
8IC1	DIC642371	HAD626 500MS/S ADC
8IC2	DIC619101	NJM 4558M(TE3) TE1208L
8IC3, 8IC4	DIC619271	TA 75S558F (TE85L) TE0804L
8J1	DCN126131	89177-5600
8L4 to 8L8	DCL119361	BL02RN2-R62 TD04N
8Q1	DTR890841	IMX3 TE0804R
8Q2, 8Q3	DTR830481	2SC 2873-Y TE1208L
8Q4	DTR129011	2SB 605K/L TRB
8Q5	DTR810161	2SA 1213-Y TE12L
8R1	DRZ832531	RK73H 2A 15KΩF TD0804N
8R2	DRZ832721	RK73H 2A 91KΩF TD0804N
8R3	DRZ832361	RK73H 2A 3.0KΩF TD0804N
8R4	DRZ832341	RK73H 2A 2.4KΩF TD0804N
8R10	DRZ832491	RK73H 2A 10KΩF TD0804N

CH2 A/D CNVT 8

CIRCUIT REFERENCE	IWATSU PART NO.	DESCRIPTION
8R11	DRZ832321	RK73H 2A 2.0KΩF TD0804N
8R12	DRZ832301	RK73H 2A 1.6KΩF TD0804N
8R13	DRZ833061	RK73H 2A 75ΩF TD0804N
8R14	DRZ832051	RK73H 2A 150ΩF TD0804N
8R15 to 8R17	DRZ832251	RK73H 2A 1.0KΩF TD0804N
8R20	DRZ832341	RK73H 2A 2.4KΩF TD0804N
8R21	DRZ832481	RK73H 2A 9.1KΩF TD0804N
8R22	DRZ832311	RK73H 2A 1.8KΩF TD0804N
8R25	DRZ832251	RK73H 2A 1.0KΩF TD0804N
8R26	DRZ832211	RK73H 2A 680ΩF TD0804N
8R30	DRZ832321	RK73H 2A 2.0KΩF TD0804N
8R31	DRZ832311	RK73H 2A 1.8KΩF TD0804N
8R32, 8R33	DRZ833061	RK73H 2A 75ΩF TD0804N
8R34	DRZ833551	RK73H 2A 33ΩF TD0804N
8R35	DRZ832251	RK73H 2A 1.0KΩF TD0804N
8R40 to 8R43	DRZ833491	RK73H 2A 18ΩF TD0804N
8R46, 8R47	DRZ832351	RK73H 2A 2.7KΩF TD0804N
8R48, 8R49	DRZ832281	RK73H 2A 1.3KΩF TD0804N
8R50	DRZ832171	RK73H 2A 470ΩF TD0804N
8R51	DRZ832351	RK73H 2A 2.7KΩF TD0804N
8R52	DRZ832121	RK73H 2A 300ΩF TD0804N
8R53	DRZ832111	RK73H 2A 270ΩF TD0804N
8R54	DRZ831591	MCR10J 4R7E TD0804N

TRIG SELECTOR 11

CIRCUIT REFERENCE	IWATSU PART NO.	DESCRIPTION
11C1	DCC810571	C2012F 1H 104Z A TD0804N
11C2	DCC820021	C2012F 1C 105Z A TD84N
11C3, 11C9	DCC810571	C2012F 1H 104Z A TD0804N
11C10	DCC820021	C2012F 1C 105Z A TD84N
11C11	DCC810571	C2012F 1H 104Z A TD0804N
11C12	DCC820021	C2012F 1C 105Z A TD84N
11C13, 11C19	DCC810571	C2012F 1H 104Z A TD0804N
11C20	DCC820021	C2012F 1C 105Z A TD84N
11C21	DCC810511	C2012F 1H 103Z A TD84N
11C23	DCC816401	C2012CH 1H 030C A TD84N
11C25	DCC816521	C2012CH 1H 220J A TD84N
11C26	DCC810571	C2012F 1H 104Z A TD0804N
11C31	DCC810511	C2012F 1H 103Z A TD84N
11C33	DCC816401	C2012CH 1H 030C A TD84N
11C35	DCC816521	C2012CH 1H 220J A TD84N
11C36	DCC810571	C2012F 1H 104Z A TD0804N
11C37	DCC816521	C2012CH 1H 220J A TD84N
11C38	DCC810511	C2012F 1H 103Z A TD84N
11C42	DCC816521	C2012CH 1H 220J A TD84N
11C43	DCC810571	C2012F 1H 104Z A TD0804N
11C54, 11C56	DCC810511	C2012F 1H 103Z A TD84N
11C57	DCC810571	C2012F 1H 104Z A TD0804N
11C70 to 11C73	DCC810571	C2012F 1H 104Z A TD0804N
11C74	DCC820121	EMK325F 106ZH-T TE0804N
11C75	DCE219051	SME-CE04W 1A 101M TC04R
11C76 to 11C82	DCC810571	C2012F 1H 104Z A TD0804N
11D1	DDD810241	1SS 272 TE0804R
11DL1, 11DL2	DZB999061	LDH33A202B TE1208B
11DL4 to 11DL7	DZB999071	LDH33A801B TE1208B
11FL1	DCL870021	NFM41P11C204 TE1204N
11IC1, 11IC2	DIC322671	MC 10E116FN/SY 10E116JC
11IC3	DIC322931	MC 10E157FN
11IC4	DIC891061	MST412 SMART TRIGGER IC
11IC5	DIC322831	MC 10EL11D
11IC6	DIC499821	TC7S04F/SC7S04F TE0804L
11IC7	DIC322721	MC 10H102M
11L1	DCL811011	BLM21A121FPT TD0804N
11Q1	DTR149011	2SD 571K/L TRB
11Q2	DTR890761	IMX5 TE0804R
11R1 to 11R4	DRZ833021	RK73H 2A 51ΩF TD0804N
11R9	DRZ833021	RK73H 2A 51ΩF TD0804N
11R10 to 11R14	DRZ833021	RK73H 2A 51ΩF TD0804N
11R19 to 11R21	DRZ833021	RK73H 2A 51ΩF TD0804N
11R22	DRZ832311	RK73H 2A 1.8KΩF TD0804N
11R23	DRZ832371	RK73H 2A 3.3KΩF TD0804N
11R24	DRZ832291	RK73H 2A 1.5KΩF TD0804N
11R25	DRZ832481	RK73H 2A 9.1KΩF TD0804N
11R26, 11R27	DRZ833021	RK73H 2A 51ΩF TD0804N
11R31	DRZ833021	RK73H 2A 51ΩF TD0804N
11R32	DRZ832311	RK73H 2A 1.8KΩF TD0804N
11R33	DRZ832371	RK73H 2A 3.3KΩF TD0804N
11R34	DRZ832291	RK73H 2A 1.5KΩF TD0804N
11R35	DRZ832481	RK73H 2A 9.1KΩF TD0804N

TRIG SELECTOR [11]

CIRCUIT REFERENCE	IWATSU PART NO.	DESCRIPTION
11R36	DRZ833021	RK73H 2A 51ΩF TD0804N
11R37	DRZ832481	RK73H 2A 9.1KΩF TD0804N
11R38, 11R39	DRZ833021	RK73H 2A 51ΩF TD0804N
11R41	DRZ833021	RK73H 2A 51ΩF TD0804N
11R42	DRZ832481	RK73H 2A 9.1KΩF TD0804N
11R43, 11R44	DRZ832011	RK73H 2A 100ΩF TD0804N
11R45 to 11R47	DRZ833061	RK73H 2A 75ΩF TD0804N
11R48	DRZ832091	RK73H 2A 220ΩF TD0804N
11R49, 11R50	DRZ833041	RK73H 2A 62ΩF TD0804N
11R51, 11R52	DRZ833441	RK73H 2A 10ΩF TD0804N
11R53	DRZ832711	RK73H 2A 82KΩF TD0804N
11R54, 11R55	DRZ833011	RK73H 2A 47ΩF TD0804N
11R56	DRZ832211	RK73H 2A 680ΩF TD0804N
11R57	DRZ832251	RK73H 2A 1.0KΩF TD0804N
11R58	DRZ833061	RK73H 2A 75ΩF TD0804N
11R59, 11R60	DRZ833021	RK73H 2A 51ΩF TD0804N
11R61	DRZ831501	MCR10 000E TD0804N
11R62 to 11R64	DRZ833021	RK73H 2A 51ΩF TD0804N
11R74	DRZ833441	RK73H 2A 10ΩF TD0804N
11R80, 11R81	DRZ833031	RK73H 2A 56ΩF TD0804N
11R84 to 11R86	DRZ833031	RK73H 2A 56ΩF TD0804N
11R89	DRZ833031	RK73H 2A 56ΩF TD0804N
11R90 to 11R93	DRZ833551	RK73H 2A 33ΩF TD0804N
11R98 to 11R103	DRZ833551	RK73H 2A 33ΩF TD0804N
11R108, 11R109	DRZ833551	RK73H 2A 33ΩF TD0804N

400MHZ OSC [12]

CIRCUIT REFERENCE	IWATSU PART NO.	DESCRIPTION
12C4	DCC810571	C2012F 1H 104Z A TD0804N
12C7, 12C8, 12C13	DCC816521	C2012CH 1H 220J A TD84N
12C17	DCC810571	C2012F 1H 104Z A TD0804N
12C19, 12C20	DCC810511	C2012F 1H 103Z A TD84N
12C21	DCC816381	C2012CH 1H 020C A TD84N
12C22	DCC815891	C2012CH 1H 150J A TD84N
12C23, 12C27	DCC810511	C2012F 1H 103Z A TD84N
12C31	DCC815841	C2012SL 1H 681J A TD84N
12C34	DCE219151	SME-CE04W 1A 471M TC04R
12C35	DCC819091	GRM42-6B 106K6.3PT TE0804N
12C40	DCC816421	C2012CH 1H 040C A TD84N
12C41	DCC810511	C2012F 1H 103Z A TD84N
12C50 to 12C56	DCC810571	C2012F 1H 104Z A TD0804N
12D1	DDD810401	HVU 202A3 TE0804R
12D2	DDD810241	1SS 272 TE0804R
12DL1	DZB999051	LDH33A152B TE1208B
12IC1	DIC483321	74HC595F/AF TE1612B
12IC2	DIC322921	MC 10H117M
12IC3	DIC322601	MC 10EL01
12IC4, 12IC5	DIC619271	TA 75S558F (TE85L) TE0804L
12L1	DCL811031	HK2125 18NJ-T TE0804N
12Q1	DTR215791	2SK 2287
12R2, 12R4	DRZ833021	RK73H 2A 51ΩF TD0804N
12R9, 12R10	DRZ832481	RK73H 2A 9.1KΩF TD0804N
12R11, 12R12	DRZ833021	RK73H 2A 51ΩF TD0804N
12R14	DRZ832481	RK73H 2A 9.1KΩF TD0804N
12R17, 12R18	DRZ833021	RK73H 2A 51ΩF TD0804N
12R19, 12R20	DRZ832171	RK73H 2A 470ΩF TD0804N
12R21	DRZ833481	RK73H 2A 15ΩF TD0804N
12R22	DRZ832731	RK73H 2A 100KΩF TD0804N
12R23	DRZ832441	RK73H 2A 6.2KΩF TD0804N
12R26	DRZ832491	RK73H 2A 10KΩF TD0804N
12R27	DRZ832531	RK73H 2A 15KΩF TD0804N
12R30	DRZ832251	RK73H 2A 1.0KΩF TD0804N
12R31	DRZ832481	RK73H 2A 9.1KΩF TD0804N
12R32	DRZ832341	RK73H 2A 2.4KΩF TD0804N
12R33	DRZ832321	RK73H 2A 2.0KΩF TD0804N
12R34	DRZ832491	RK73H 2A 10KΩF TD0804N
12R40, 12R41	DRZ833021	RK73H 2A 51ΩF TD0804N
12RA1, 12RA2	DFB810131	RAC16 4D 472J A TD0804M
12RA3, 12RA4	DFB810051	RAC16 4D 103J A TD0804M
12Z21	MHN001311	HEATSINK OSH-2425-SPL

TV SYNC SEP 13

CIRCUIT REFERENCE	IWATSU PART NO.	DESCRIPTION
13C2	DCC816541	C2012CH 1H 330J A TD84N
13C3	DCC820261	C2012F 1C 225Z A TE0804N
13C5	DCC810511	C2012F 1H 103Z A TD84N
13C17	DCC816601	C2012CH 1H 101J A TD84N
13C21	DCC819091	GRM42-6B 106K6.3PT TE0804N
13C22	DCC820021	C2012F 1C 105Z A TD84N
13C34, 13C43	DCC810571	C2012F 1H 104Z A TD0804N
13C44	DCF810121	ECHU 1C 104J TE0804N
13C50 to 13C53	DCC810571	C2012F 1H 104Z A TD0804N
13C54	DCC816801	C2012CH 1H 102J A TD84N
13C57 to 13C62	DCC810571	C2012F 1H 104Z A TD0804N
13C63	DCC816801	C2012CH 1H 102J A TD84N
13C64	DCC810571	C2012F 1H 104Z A TD0804N
13C65, 13C66	DCC816801	C2012CH 1H 102J A TD84N
13C67, 13C68	DCC810571	C2012F 1H 104Z A TD0804N
13D4	DDD810241	1SS 272 TE0804R
13IC1	DIC623501	PC 1663G-E1 TE1208F
13IC2	DIC614411	PC 812G2-E1 TE1208F
13IC3	DIC889161	TC 4W53F(TE12L) TE1208R
13IC4	DIC639041	PC 311G2-E1 TE1208F
13IC5	DIC639031	NJM 2903M(TE3) TE1208L
13IC6, 13IC7	DIC889161	TC 4W53F(TE12L) TE1208R
13IC8	DIC699531	LM 1881M TE1208B
13IC9	DIC448531	MC 74HC153F/AF
13IC10	DIC483321	74HC595F/AF TE1612B
13Q1	DTR890551	DTC114EK/RN1402 TE0804L
13Q4	DTR870031	3SK 241 TE0804L
13Q5	DTR890841	IMX3 TE0804R
13R1	DRZ832251	RK73H 2A 1.0KΩF TD0804N
13R2	DRZ832731	RK73H 2A 100KΩF TD0804N
13R3	DRZ832091	RK73H 2A 220ΩF TD0804N
13R4	DRZ832811	RK73H 2A 220KΩF TD0804N
13R5	DRZ832751	RK73H 2A 120KΩF TD0804N
13R6	DRZ832731	RK73H 2A 100KΩF TD0804N
13R7	DRZ832571	RK73H 2A 22KΩF TD0804N
13R10	DRZ832391	RK73H 2A 3.9KΩF TD0804N
13R11, 13R12	DRZ832091	RK73H 2A 220ΩF TD0804N
13R13	DRZ832491	RK73H 2A 10KΩF TD0804N
13R14, 13R15	DRZ832251	RK73H 2A 1.0KΩF TD0804N
13R16	DRZ832731	RK73H 2A 100KΩF TD0804N
13R18	DRZ832491	RK73H 2A 10KΩF TD0804N
13R19	DRZ828761	RR1220P-204-D TD0804N
13R20	DRZ832501	RK73H 2A 11KΩF TD0804N
13R21	DRZ832731	RK73H 2A 100KΩF TD0804N
13R22, 13R24	DRZ832811	RK73H 2A 220KΩF TD0804N
13R25	DRZ832391	RK73H 2A 3.9KΩF TD0804N
13R30	DRZ832511	RK73H 2A 12KΩF TD0804N
13R31	DRZ832331	RK73H 2A 2.2KΩF TD0804N
13R32	DRZ832151	RK73H 2A 390ΩF TD0804N
13R34	DRZ832251	RK73H 2A 1.0KΩF TD0804N
13R35	DRZ832331	RK73H 2A 2.2KΩF TD0804N
13R36	DRZ832731	RK73H 2A 100KΩF TD0804N
13R37	DRZ832331	RK73H 2A 2.2KΩF TD0804N

TV SYNC SEP 13

CIRCUIT REFERENCE	IWATSU PART NO.	DESCRIPTION
13R38, 13R39	DRZ832411	RK73H 2A 4.7KΩF TD0804N
13R40	DRZ832331	RK73H 2A 2.2KΩF TD0804N
13R41	DRZ832951	RK73H 2A 820KΩF TD0804N
13R42	DRZ832891	RK73H 2A 470KΩF TD0804N
13R43	DRZ832191	RK73H 2A 560ΩF TD0804N
13R44	DRZ832931	RK73H 2A 680KΩF TD0804N
13R45, 13R46	DRZ832011	RK73H 2A 100ΩF TD0804N
13R47, 13R48	DRZ832371	RK73H 2A 3.3KΩF TD0804N
13R50	DRZ832511	RK73H 2A 12KΩF TD0804N

TIME BASE 14

CIRCUIT REFERENCE	IWATSU PART NO.	DESCRIPTION
14C8	DCC810571	C2012F 1H 104Z A TD0804N
14C10, 14C21	DCC810511	C2012F 1H 103Z A TD84N
14C22, 14C28	DCC810511	C2012F 1H 103Z A TD84N
14C30, 14C31	DCC815841	C2012SL 1H 681J A TD84N
14C34, 14C35	DCC810941	C2012B 1H 682K A TD84N
14C36	DCC816601	C2012CH 1H 101J A TD84N
14C37, 14C38	DCC816801	C2012CH 1H 102J A TD84N
14C40	DCC810511	C2012F 1H 103Z A TD84N
14C41	DCC810571	C2012F 1H 104Z A TD0804N
14C42	DCC816421	C2012CH 1H 040C A TD84N
14C60	DCC820021	C2012F 1C 105Z A TD84N
14C61, 14C62	DCC810571	C2012F 1H 104Z A TD0804N
14C63	DCE219051	SME-CE04W 1A 101M TC04R
14C64 to 14C67	DCC810571	C2012F 1H 104Z A TD0804N
14C68, 14C69	DCE219051	SME-CE04W 1A 101M TC04R
14C70 to 14C75	DCC810571	C2012F 1H 104Z A TD0804N
14C76, 14C77	DCC810511	C2012F 1H 103Z A TD84N
14C78, 14C79	DCC810571	C2012F 1H 104Z A TD0804N
14C80	DCC820121	EMK325F 106ZH-T TE0804N
14C81	DCC810511	C2012F 1H 103Z A TD84N
14C83	DCC810571	C2012F 1H 104Z A TD0804N
14D1	DDD810241	1SS 272 TE0804R
14D2	DDD810261	HSM 88AS TL
14FL1, 14FL2	DCL870021	NFM41P11C204 TE1204N
14IC1	DIC891041	MTB411A TIMEBASE IC
14IC2	DIC891031	MCG426 CLOCK GENERATOR
14IC3	DHF060191	QCG571ABN-10.0000
14IC4	DIC322631	MC 10EL16D
14IC5	DHF060181	VC-5R0A30-2000 TE1608B
14IC6	DIC619271	TA 75S558F (TE85L) TE0804L
14IC7	DIC659791	TA 78L05F (TE12L) TE1208L
14IC8	DIC471841	PALCE16V8H-10JC/4 K0315ACQ
14L2, 14L4, 14L5	DCL811011	BLM21A121FPT TD0804N
14Q1	DTR890861	IMZ1 TE0804R
14Q2	DTR890851	IMH1 TE0804N
14R1, 14R2	DRZ833041	RK73H 2A 62ΩF TD0804N
14R3	DRZ833551	RK73H 2A 33ΩF TD0804N
14R4 to 14R7	DRZ833041	RK73H 2A 62ΩF TD0804N
14R8	DRZ832011	RK73H 2A 100ΩF TD0804N
14R10, 14R11	DRZ833021	RK73H 2A 51ΩF TD0804N
14R12 to 14R17	DRZ833041	RK73H 2A 62ΩF TD0804N
14R18	DRZ832311	RK73H 2A 1.8KΩF TD0804N
14R19	DRZ832371	RK73H 2A 3.3KΩF TD0804N
14R20	DRZ832331	RK73H 2A 2.2KΩF TD0804N
14R21	DRZ832311	RK73H 2A 1.8KΩF TD0804N
14R22	DRZ832331	RK73H 2A 2.2KΩF TD0804N
14R23	DRZ833041	RK73H 2A 62ΩF TD0804N
14R24 to 14R26	DRZ833021	RK73H 2A 51ΩF TD0804N
14R27	DRZ832731	RK73H 2A 100KΩF TD0804N
14R28, 14R29	DRZ833061	RK73H 2A 75ΩF TD0804N
14R30 to 14R33	DRZ832371	RK73H 2A 3.3KΩF TD0804N
14R34, 14R35	DRZ832491	RK73H 2A 10KΩF TD0804N

TIME BASE 14

CIRCUIT REFERENCE	IWATSU PART NO.	DESCRIPTION
14R36	DRZ832251	RK73H 2A 1.0KΩF TD0804N
14R37 to 14R39	DRZ833021	RK73H 2A 51ΩF TD0804N
14R40	DRZ832211	RK73H 2A 680ΩF TD0804N
14R45 to 14R48	DRZ833061	RK73H 2A 75ΩF TD0804N
14R50, 14R51	DRZ833021	RK73H 2A 51ΩF TD0804N
14R53	DRZ833551	RK73H 2A 33ΩF TD0804N
14R55	DRZ833021	RK73H 2A 51ΩF TD0804N
14R56	DRZ832011	RK73H 2A 100ΩF TD0804N
14R57	DRZ833041	RK73H 2A 62ΩF TD0804N
14R58, 14R59	DRZ832331	RK73H 2A 2.2KΩF TD0804N
14R60	DRZ832491	RK73H 2A 10KΩF TD0804N

T/D CNVT 15

CIRCUIT REFERENCE	IWATSU PART NO.	DESCRIPTION
15C1	DCC810511	C2012F 1H 103Z A TD84N
15C5	DCC810571	C2012F 1H 104Z A TD0804N
15C11	DCC816801	C2012CH 1H 102J A TD84N
15C14 to 15C16	DCC810571	C2012F 1H 104Z A TD0804N
15C21, 15C23	DCC810571	C2012F 1H 104Z A TD0804N
15C25	DCC810571	C2012F 1H 104Z A TD0804N
15C26	DCC820021	C2012F 1C 105Z A TD84N
15C27	DCC810511	C2012F 1H 103Z A TD84N
15C29	DCC810571	C2012F 1H 104Z A TD0804N
15C30, 15C31	DCC816801	C2012CH 1H 102J A TD84N
15C32, 15C33	DCC810571	C2012F 1H 104Z A TD0804N
15C34	DCC816801	C2012CH 1H 102J A TD84N
15C36	DCC810571	C2012F 1H 104Z A TD0804N
15C39	DCC816381	C2012CH 1H 020C A TD84N
15C41	DCC819091	GRM42-6B 106K6.3PT TE0804N
15C43	DCE219051	SME-CE04W 1A 101M TC04R
15C50	DCC810571	C2012F 1H 104Z A TD0804N
15C54	DCC816581	C2012CH 1H 680J A TD84N
15C55	DCC816511	C2012CH 1H 180J A TD84N
15C58	DCC816801	C2012CH 1H 102J A TD84N
15C60, 15C64	DCC810571	C2012F 1H 104Z A TD0804N
15C81, 15C83	DCE229201	SME-CE04W 1E 470M TC04R
15C84	DCC810571	C2012F 1H 104Z A TD0804N
15C85	DCE219051	SME-CE04W 1A 101M TC04R
15C86	DCC810571	C2012F 1H 104Z A TD0804N
15C87	DCE219051	SME-CE04W 1A 101M TC04R
15C88 to 15C91	DCC810571	C2012F 1H 104Z A TD0804N
15C92, 15C93	DCC820021	C2012F 1C 105Z A TD84N
15D1	DDD810261	HSM 88AS TL
15D2	DDD810461	HSM 124S-JTL TE0804L
15D3	DDD810261	HSM 88AS TL
15IC1	DIC614411	□PC 812G2-E1 TE1208F
15IC2	DIC614811	LT 1097S8-T2 TE1208B
15IC3	DIC639161	NJM 360M(TE3) TE1208L
15IC4	DIC659371	NJM 431U-TE1 (JRC)
15L1 to 15L4	DCL811011	BLM21A121FPT TD0804N
15Q1	DTR810041	2SA 1162Y TE85L
15Q2	DTR898711	XN 6435 TE0804R
15Q3 to 15Q5	DTR830071	2SC 3356-T1B
15Q6	DTR229091	2SJ 144-GR(TE85L) TE0804L
15Q7 to 15Q11	DTR830071	2SC 3356-T1B
15Q12, 15Q13	DTR860161	2SK 508 K51 TE0804L
15Q14	DTR830071	2SC 3356-T1B
15R1	DRZ832511	RK73H 2A 12KΩF TD0804N
15R2	DRZ832441	RK73H 2A 6.2KΩF TD0804N
15R3	DRZ832031	RK73H 2A 120ΩF TD0804N
15R4	DRZ832301	RK73H 2A 1.6KΩF TD0804N
15R5	DRZ832361	RK73H 2A 3.0KΩF TD0804N
15R6	DRZ832971	RK73H 2A 1.0MΩF TD0804N
15R10	DRZ820581	RN73F 2A 6.8KΩD TD0804N
15R11	DRZ820621	RN73F 2A 10KΩD TD0804N
15R12	DRZ820871	RN73F 2A 2.4KΩD TD0804N
15R13	DRZ832411	RK73H 2A 4.7KΩF TD0804N

T/D CNVT 15

CIRCUIT REFERENCE	IWATSU PART NO.	DESCRIPTION
15R14, 15R15	DRZ832491	RK73H 2A 10KΩF TD0804N
15R17	DRZ832251	RK73H 2A 1.0KΩF TD0804N
15R18	DRZ832381	RK73H 2A 3.6KΩF TD0804N
15R19	DRZ832461	RK73H 2A 7.5KΩF TD0804N
15R20	DRZ832411	RK73H 2A 4.7KΩF TD0804N
15R21	DRZ832251	RK73H 2A 1.0KΩF TD0804N
15R22, 15R23	DRZ833011	RK73H 2A 47ΩF TD0804N
15R24	DRZ832331	RK73H 2A 2.2KΩF TD0804N
15R25	DRZ832251	RK73H 2A 1.0KΩF TD0804N
15R26	DRZ832221	RK73H 2A 750ΩF TD0804N
15R27	DRZ832441	RK73H 2A 6.2KΩF TD0804N
15R28	DRZ832431	RK73H 2A 5.6KΩF TD0804N
15R29	DRZ832301	RK73H 2A 1.6KΩF TD0804N
15R30	DRZ833011	RK73H 2A 47ΩF TD0804N
15R31	DRZ832011	RK73H 2A 100ΩF TD0804N
15R32, 15R33	DRZ833011	RK73H 2A 47ΩF TD0804N
15R34	DRZ832011	RK73H 2A 100ΩF TD0804N
15R35, 15R36	DRZ832251	RK73H 2A 1.0KΩF TD0804N
15R37	DRZ832051	RK73H 2A 150ΩF TD0804N
15R38	DRZ833021	RK73H 2A 51ΩF TD0804N
15R39	DRZ832611	RK73H 2A 33KΩF TD0804N
15R40	DRZ832051	RK73H 2A 150ΩF TD0804N
15R41	DRZ832161	RK73H 2A 430ΩF TD0804N
15R42	DRZ820011	RN73G 2A 30ΩD TD0804N
15R43	DRZ833571	RK73H 2A 39ΩF TD0804N
15R44	DRZ833011	RK73H 2A 47ΩF TD0804N
15R50, 15R51	DRZ833021	RK73H 2A 51ΩF TD0804N
15R54, 15R55	DRZ833011	RK73H 2A 47ΩF TD0804N
15R56	DRZ833511	RK73H 2A 22ΩF TD0804N
15R57	DRZ832011	RK73H 2A 100ΩF TD0804N
15R58	DRZ820541	RN73F 2A 4.7KΩD TD0804N
15R59	DRZ832011	RK73H 2A 100ΩF TD0804N
15R60, 15R61	DRZ833011	RK73H 2A 47ΩF TD0804N
15R62	DRZ832391	RK73H 2A 3.9KΩF TD0804N
15R63, 15R64	DRZ820161	RN73F 2A 120ΩD TD0804N
15R65	DRZ832011	RK73H 2A 100ΩF TD0804N
15R66	DRZ832171	RK73H 2A 470ΩF TD0804N
15R67	DRZ832141	RK73H 2A 360ΩF TD0804N
15R70, 15R71	DRZ833551	RK73H 2A 33ΩF TD0804N
15R72	DRZ833011	RK73H 2A 47ΩF TD0804N
15R73	DRZ832471	RK73H 2A 8.2KΩF TD0804N
15R74	DRZ832491	RK73H 2A 10KΩF TD0804N
15R80, 15R81	DRZ828721	RR1220P-224-B TD0804N
15R82	DRZ828731	RR1220P-244-B TD0804N

CAL SIGNAL 16

CIRCUIT REFERENCE	IWATSU PART NO.	DESCRIPTION
16C3, 16C5	DCC810511	C2012F 1H 103Z A TD84N
16C7, 16C10	DCC810511	C2012F 1H 103Z A TD84N
16C12	DCC819091	GRM42-6B 106K6.3PT TE0804N
16C15	DCC816521	C2012CH 1H 220J A TD84N
16C60 to 16C69	DCC810571	C2012F 1H 104Z A TD0804N
16C70 to 16C73	DCC816801	C2012CH 1H 102J A TD84N
16C74	DCC816601	C2012CH 1H 101J A TD84N
16C75 to 16C77	DCC816801	C2012CH 1H 102J A TD84N
16C80 to 16C83	DCC820121	EMK325F 106ZH-T TE0804N
16D1, 16D2	DDD810241	1SS 272 TE0804R
16IC1	DIC483031	74HC4051F TE1612B
16IC2	DIC614811	LT 1097S8-T2 TE1208B
16IC3	DIC619271	TA 75S558F (TE85L) TE0804L
16IC4	DIC499441	74HC4053F/AF TE1612B
16IC5	DIC448531	MC 74HC153F/AF
16IC6	DIC483321	74HC595F/AF TE1612B
16J2	KHB095411	SMALL PIN JACK
16L1 to 16L4	DCL811011	BLM21A121FPT TD0804N
16R1	DRZ828541	RN73F 2A 18KΩB TD0804N
16R2	DRZ828551	RN73F 2A 2KΩB TD0804N
16R3, 16R4	DRZ832311	RK73H 2A 1.8KΩF TD0804N
16R5	DRZ832321	RK73H 2A 2.0KΩF TD0804N
16R6	DRZ828581	RN73F 2A 560ΩB TD0804N
16R7	DRZ833511	RK73H 2A 22ΩF TD0804N
16R10	DRZ832491	RK73H 2A 10KΩF TD0804N
16R11, 16R12	DRZ832351	RK73H 2A 2.7KΩF TD0804N
16R16 to 16R19	DRZ833061	RK73H 2A 75ΩF TD0804N
16R20 to 16R24	DRZ832071	RK73H 2A 180ΩF TD0804N
16R25	DRZ832031	RK73H 2A 120ΩF TD0804N

DC GENE 1/2 17

CIRCUIT REFERENCE	IWATSU PART NO.	DESCRIPTION
17C10, 17C12	DCC810511	C2012F 1H 103Z A TD84N
17C13	DCC810511	C2012F 1H 103Z A TD84N
17C16	DCC816601	C2012CH 1H 101J A TD84N
17C19, 17C22	DCC816641	C2012CH 1H 221J A TD84N
17C30	DCC810511	C2012F 1H 103Z A TD84N
17C33	DCC810571	C2012F 1H 104Z A TD0804N
17C35 to 17C37	DCC810571	C2012F 1H 104Z A TD0804N
17C50	DCC820021	C2012F 1C 105Z A TD84N
17C52 to 17C54	DCC820021	C2012F 1C 105Z A TD84N
17C55 to 17C60	DCC810571	C2012F 1H 104Z A TD0804N
17C61	DCC820021	C2012F 1C 105Z A TD84N
17C62	DCC810571	C2012F 1H 104Z A TD0804N
17C63	DCC820021	C2012F 1C 105Z A TD84N
17C64	DCC810571	C2012F 1H 104Z A TD0804N
17C65	DCC820021	C2012F 1C 105Z A TD84N
17C71, 17C73	DCE929471	SXE 16VB-220 TC04R
17IC1	DIC528501	□PD 78081GB-A67-3BS-MTX
17IC2	DIC645151	DAC 712UK
17IC3	DIC483031	74HC4051F TE1612B
17IC5	DIC619271	TA 75S558F (TE85L) TE0804L
17IC6	DIC639041	□PC 311G2-E1 TE1208F
17IC7	DIC614411	□PC 812G2-E1 TE1208F
17IC8	DIC499381	74HC138F/AF TE1612B
17IC9	DIC889101	TC 7SU04F TE0804L
17L1 to 17L3	DCL811011	BLM21A121FPT TD0804N
17Q1	DTR838661	2SC 2712LG TE85L
17R10	DRZ832101	RK73H 2A 240ΩF TD0804N
17R11	DRZ832081	RK73H 2A 200ΩF TD0804N
17R12	DRZ832501	RK73H 2A 11KΩF TD0804N
17R13	DRZ832461	RK73H 2A 7.5KΩF TD0804N
17R14	DRZ828561	RN73F 2A 3KΩB TD0804N
17R15	DRZ832241	RK73H 2A 910ΩF TD0804N
17R16	DRZ828531	RN73F 2A 1.2KΩB TD0804N
17R17, 17R18	DRZ832131	RK73H 2A 330ΩF TD0804N
17R19	DRZ832971	RK73H 2A 1.0MΩF TD0804N
17R21	DRZ832101	RK73H 2A 240ΩF TD0804N
17R22	DRZ832131	RK73H 2A 330ΩF TD0804N
17R23 to 17R25	DRZ832251	RK73H 2A 1.0KΩF TD0804N
17R26	DRZ832131	RK73H 2A 330ΩF TD0804N
17R30 to 17R32	DRZ832581	RK73H 2A 24KΩF TD0804N
17R35 to 17R37	DRZ832511	RK73H 2A 12KΩF TD0804N
17R40	DRZ831501	MCR10 000E TD0804N

DC GENE 2/2 [18]

CIRCUIT REFERENCE	IWATSU PART NO.	DESCRIPTION
18C1	DCF810121	ECHU 1C 104J TE0804N
18C2 to 18C7	DCC811111	C2012B 1E 104K A TD84N
18C8	DCF810121	ECHU 1C 104J TE0804N
18C17 to 18C19	DCC811111	C2012B 1E 104K A TD84N
18C20	DCC810571	C2012F 1H 104Z A TD0804N
18C21	DCF810121	ECHU 1C 104J TE0804N
18C22	DCC811111	C2012B 1E 104K A TD84N
18C23,18C24	DCC810571	C2012F 1H 104Z A TD0804N
18C50 to 18C53	DCC810571	C2012F 1H 104Z A TD0804N
18C55,18C56	DCC810571	C2012F 1H 104Z A TD0804N
18C60 to 18C71	DCC810571	C2012F 1H 104Z A TD0804N
18IC1, 18IC3	DIC483021	TC 4051BF (EL) TE1612B
18IC10 to 18IC13	DIC614761	TL 084CNS
18IC14	DIC614411	□PC 812G2-E1 TE1208F
18R1, 18R8	DRZ832071	RK73H 2A 180ΩF TD0804N
18R12, 18R13	DRZ832071	RK73H 2A 180ΩF TD0804N
18R19, 18R21	DRZ832071	RK73H 2A 180ΩF TD0804N
18R31	DRZ832011	RK73H 2A 100ΩF TD0804N
18RA1, 18RA2	DFB810111	RAC16 4D 101J A TD0804M
18RA5	DFB810111	RAC16 4D 101J A TD0804M

MAIN CONT 1/2 [19]

CIRCUIT REFERENCE	IWATSU PART NO.	DESCRIPTION
19C10	DCC816641	C2012CH 1H 221J A TD84N
19C51 to 19C53	DCC810571	C2012F 1H 104Z A TD0804N
19C54	DCC820031	C2012F 1C 224Z A TD84N
19C55 to 19C59	DCC810571	C2012F 1H 104Z A TD0804N
19C60	DCC820031	C2012F 1C 224Z A TD84N
19C61, 19C62	DCC820021	C2012F 1C 105Z A TD84N
19C63	DCC820031	C2012F 1C 224Z A TD84N
19C64	DCC810571	C2012F 1H 104Z A TD0804N
19IC1	DIC471852	PALCE16V8H-10JC/4 K0327MBC
19IC2	DIC471881	PALCE16V8H-7JC/5 K0319HCS
19IC3	DIC471891	PALCE16V8H-7JC/5 K0320HMR
19IC4	DIC484011	74VHC138F EL TE1612B
19IC5	DIC449631	MC 74HC574F/AF
19IC6	DIC471871	PALCE16V8H-10JC/4 K0318MST
19IC7	DIC471861	PALCE16V8H-10JC/4 K0317MCG
19IC8	DIC645141	PCF 8584T TE2412B
19IC9	DIC483031	74HC4051F TE1612B
19IC10	DIC484491	74VHCT541AF EL TE2412B
19IC11	DIC471631	74VHCT573AF
19IC12	DIC484531	74VHC32F EL TE1612B
19IC13	DIC495111	74HCT245AF TE2412B
19IC14	DIC471901	PALCE16V8H-7JC/5 K0321HMS
19R1	DRZ831501	MCR10 000E TD0804N
19R2	DRZ832331	RK73H 2A 2.2KΩF TD0804N
19R3	DRZ832251	RK73H 2A 1.0KΩF TD0804N
19R4	DRZ832331	RK73H 2A 2.2KΩF TD0804N
19R5, 19R6	DRZ832251	RK73H 2A 1.0KΩF TD0804N
19R7	DRZ832011	RK73H 2A 100ΩF TD0804N
19R8	DRZ832251	RK73H 2A 1.0KΩF TD0804N
19R9	DRZ832331	RK73H 2A 2.2KΩF TD0804N
19R10	DRZ832131	RK73H 2A 330ΩF TD0804N
19R21, 19R22	DRZ832101	RK73H 2A 240ΩF TD0804N
19R24, 19R25	DRZ832101	RK73H 2A 240ΩF TD0804N
19R26, 19R27	DRZ832251	RK73H 2A 1.0KΩF TD0804N
19RA2, 19RA4	DFB810041	RAC16 4D 220J A TD0804M
19RA6	DFB810041	RAC16 4D 220J A TD0804M
19RA8	DFB810081	RAC16 4D 102J A TD0804M
19RA12	DFB810111	RAC16 4D 101J A TD0804M
19RA16	DFB810041	RAC16 4D 220J A TD0804M
19RA18	DFB810121	RAC16 4D 470J A TD0804M
19RA19, 19RA20	DFB810041	RAC16 4D 220J A TD0804M

MAIN CONT 2/2 [20]

CIRCUIT REFERENCE	IWATSU PART NO.	DESCRIPTION
20C3	DCC810511	C2012F 1H 103Z A TD84N
20C4, 20C5	DCC810571	C2012F 1H 104Z A TD0804N
20C6	DCE219051	SME-CE04W 1A 101M TC04R
20C31	DCC810511	C2012F 1H 103Z A TD84N
20C51 to 20C64	DCC810571	C2012F 1H 104Z A TD0804N
20C70, 20C71	DCC810571	C2012F 1H 104Z A TD0804N
20C80	DCC816801	C2012CH 1H 102J A TD84N
20IC1	DIC449631	MC 74HC574F/AF
20IC2, 20IC3	DIC499381	74HC138F/AF TE1612B
20IC5, 20IC6	DIC499381	74HC138F/AF TE1612B
20IC7	DIC499321	74HC04F/AF TE1612B
20IC8	DIC529201	AT93C66-10SC JEDEC TE1208B
20IC9	DIC470461	DS 1620S TE1612B
20IC10	DIC889161	TC 4W53F(TE12L) TE1208R
20IC11, 20IC12	DIC642201	MB88346BPF-G-BND-EF TE2412F
20IC13	DIC659371	NJM 431U-TE1 (JRC)
20IC14	DIC449631	MC 74HC574F/AF
20IC15	DIC619271	TA 75S558F (TE85L) TE0804L
20IC16	DIC889131	TC 7W32F(TE12L) TE1208R
20J1, 20J3, 20J4	DCN129381	52808-2691 TE4412B
20R3	DRZ832011	RK73H 2A 100ΩF TD0804N
20R4	DRZ832291	RK73H 2A 1.5KΩF TD0804N
20R5	DRZ820441	RN73F 2A 1.8KΩD TD0804N
20R6	DRZ820491	RN73F 2A 3KΩD TD0804N
20R7, 20R8	DRZ833011	RK73H 2A 47ΩF TD0804N
20R10, 20R11	DRZ832331	RK73H 2A 2.2KΩF TD0804N
20R14	DRZ832011	RK73H 2A 100ΩF TD0804N
20R15, 20R16	DRZ832331	RK73H 2A 2.2KΩF TD0804N
20R17 to 20R19	DRZ832011	RK73H 2A 100ΩF TD0804N
20R22	DRZ832291	RK73H 2A 1.5KΩF TD0804N
20R24	DRZ832011	RK73H 2A 100ΩF TD0804N
20R30	DRZ820621	RN73F 2A 10KΩD TD0804N
20R31	DRZ820661	RN73F 2A 15KΩD TD0804N
20R32	DRZ832441	RK73H 2A 6.2KΩF TD0804N
20R33	DRZ832221	RK73H 2A 750ΩF TD0804N
20R34, 20R35	DRZ832491	RK73H 2A 10KΩF TD0804N
20R36, 20R37	DRZ832011	RK73H 2A 100ΩF TD0804N
20RA4, 20RA5	DFB810111	RAC16 4D 101J A TD0804M
20RA8, 20RA10	DFB810111	RAC16 4D 101J A TD0804M

POWER CONNECTOR [21]

CIRCUIT REFERENCE	IWATSU PART NO.	DESCRIPTION
21C1 to 21C4	DCC810511	C2012F 1H 103Z A TD84N
21C10	DCE229221	SME-CE04W 1E 221M TC04R
21C11	DCC820031	C2012F 1C 224Z A TD84N
21C12	DCE229201	SME-CE04W 1E 470M TC04R
21C13	DCC820031	C2012F 1C 224Z A TD84N
21C18	DCE229201	SME-CE04W 1E 470M TC04R
21C19	DCC820031	C2012F 1C 224Z A TD84N
21C20	DCE219151	SME-CE04W 1A 471M TC04R
21C21	DCC820021	C2012F 1C 105Z A TD84N
21C30	DCE219051	SME-CE04W 1A 101M TC04R
21C31	DCC820031	C2012F 1C 224Z A TD84N
21C40	DCE219151	SME-CE04W 1A 471M TC04R
21C41	DCC820021	C2012F 1C 105Z A TD84N
21C50	DCE219051	SME-CE04W 1A 101M TC04R
21C51	DCC820031	C2012F 1C 224Z A TD84N
21C52	DCC810511	C2012F 1H 103Z A TD84N
21C60	DCE229221	SME-CE04W 1E 221M TC04R
21C61	DCC820031	C2012F 1C 224Z A TD84N
21C62	DCE229201	SME-CE04W 1E 470M TC04R
21C63	DCC820031	C2012F 1C 224Z A TD84N
21C68	DCE229201	SME-CE04W 1E 470M TC04R
21C69	DCC820031	C2012F 1C 224Z A TD84N
21C70	DCE219151	SME-CE04W 1A 471M TC04R
21C71	DCC820021	C2012F 1C 105Z A TD84N
21C80	DCE219051	SME-CE04W 1A 101M TC04R
21C81	DCC820031	C2012F 1C 224Z A TD84N
21C90	DCE219151	SME-CE04W 1A 471M TC04R
21C91	DCC820021	C2012F 1C 105Z A TD84N
21C100	DCE219051	SME-CE04W 1A 101M TC04R
21C101	DCC820031	C2012F 1C 224Z A TD84N
21C102, 21C103	DCC810511	C2012F 1H 103Z A TD84N
21C110 to 21C112	DCC810511	C2012F 1H 103Z A TD84N
21J1	DCN126021	CONNECTOR 53258-0610
21J2	DCN126081	CONNECTOR 53258-0710
21J3	DCN990911	CONNECTOR 5267-07A
21L10, 21L11	DCL119361	BL02RN2-R62 TD04N
21L14, 21L20	DCL119361	BL02RN2-R62 TD04N
21L25, 21L40	DCL119361	BL02RN2-R62 TD04N
21L41, 21L46	DCL119361	BL02RN2-R62 TD04N
21L60, 21L61	DCL119361	BL02RN2-R62 TD04N
21L64, 21L70	DCL119361	BL02RN2-R62 TD04N
21L75, 21L90	DCL119361	BL02RN2-R62 TD04N
21L91, 21L96	DCL119361	BL02RN2-R62 TD04N
21SW1	DSW017001	SPUP19

CH1 FRONT END 2

CIRCUIT REFERENCE	IWATSU PART NO.	DESCRIPTION
2C1, 2C2	DCC816471	C2012CH 1H 080D A TD84N
2C3, 2C4	DCC850101	GRM42-6CH 050C500PT TE0804N
2C6	DCV819091	TZBX4 Z250BA110 TE1208R
2C7	DCC816521	C2012CH 1H 220J A TD84N
2C10	DCC850101	GRM42-6CH 050C500PT TE0804N
2C12	DCV819091	TZBX4 Z250BA110 TE1208R
2C13	DCC816521	C2012CH 1H 220J A TD84N
2C14	DCC816451	C2012CH 1H 060D A TD84N
2C15	DCC816381	C2012CH 1H 020C A TD84N
2C18	DCC816491	C2012CH 1H 100D A TD84N
2C19	DCC810511	C2012F 1H 103Z A TD84N
2C20	DCC840041	GHM1530B 473K250 TE0804N
2C21	DCC850011	GRM42-6 W5R 222K500 TE0804N
2C22	DCC850091	GRM42-6CH 020C500PT TE0804N
2C24	DCC816371	C2012CH 1H 1R5C A TD84N
2C25	DCV819051	TZBX4 Z030BA110 TE1208R
2C26	DCC811731	C1608B 1H 102K A TD0804N
2C27 to 2C29	DCC810511	C2012F 1H 103Z A TD84N
2C31	DCC816421	C2012CH 1H 040C A TD84N
2C32 to 2C35	DCC810511	C2012F 1H 103Z A TD84N
2C36	DCC810571	C2012F 1H 104Z A TD0804N
2C37, 2C39	DCC816601	C2012CH 1H 101J A TD84N
2C40	DCC810571	C2012F 1H 104Z A TD0804N
2C41	DCC810981	C2012B 1H 153K A TD84N
2C42	DCC811161	C2012B 1H 333K A TD84N
2C43 to 2C46	DCC810511	C2012F 1H 103Z A TD84N
2C47	DCC811161	C2012B 1H 333K A TD84N
2C48	DCV819051	TZBX4 Z030BA110 TE1208R
2C49	DCC810511	C2012F 1H 103Z A TD84N
2C50	DCE919141	SRA 10VB-100 TC04R
2C51 to 2C53	DCC810511	C2012F 1H 103Z A TD84N
2C54, 2C55	DCC810571	C2012F 1H 104Z A TD0804N
2C58	DCC820021	C2012F 1C 105Z A TD84N
2C59, 2C60	DCC810511	C2012F 1H 103Z A TD84N
2C70 to 2C74	DCC816801	C2012CH 1H 102J A TD84N
2C75, 2C76	DCC820251	C2012B 1C 474K A TD0804N
2C80	DCC810571	C2012F 1H 104Z A TD0804N
2C81	DCC816491	C2012CH 1H 100D A TD84N
2C83 to 2C86	DCC820021	C2012F 1C 105Z A TD84N
2C87	DCC810511	C2012F 1H 103Z A TD84N
2C88	DCC816491	C2012CH 1H 100D A TD84N
2C90 to 2C96	DCC810511	C2012F 1H 103Z A TD84N
2C99	DCC819091	GRM42-6B 106K6.3PT TE0804N
2D1, 2D2	DDD810461	HSM 124S-JTL TE0804L
2D3	DDD810081	1SS 226 (TE85L) TE0804L
2D4 to 2D6	DDD810241	1SS 272 TE0804R
2D7 to 2D9	DDD810461	HSM 124S-JTL TE0804L
2D10, 2D11	DDD810241	1SS 272 TE0804R
2FL1 to 2FL7	DCL870041	NFM39R12C222T1 TE0804N
2IC1	DIC614811	LT 1097S8-T2 TE1208B
2IC2	DIC619191	NJM 082M(TE3) TE1208L
2IC3	DIC614891	HFE428 1GHZ FRONT END
2IC4	DIC631231	HTR420 TRIGGER COMPARATOR

CH1 FRONT END 2

CIRCUIT REFERENCE	IWATSU PART NO.	DESCRIPTION
2IC5	DIC483321	74HC595F/AF TE1612B
2IC6	DIC619271	TA 75S558F (TE85L) TE0804L
2J1A	DCN126091	7093XXP01 PROBUS CONNECTOR
2J1B	DCN045681	CONNECTOR BNC-BR-PC-1
2L1	DCL810831	HK1608 18NJ-T TD0804N
2L2	DCL811011	BLM21A121FPT TD0804N
2L3	DCL810811	HK1608 10NJ-T TD0804N
2L4	DCL811011	BLM21A121FPT TD0804N
2L11 to 2L14	DCL810811	HK1608 10NJ-T TD0804N
2Q1	DTR860161	2SK 508 K51 TE0804L
2Q2 to 2Q4	DTR830521	2SC 3583-T1B TE0804L
2Q5, 2Q6	DTR810041	2SA 1162Y TE85L
2Q7 to 2Q9	DTR890471	DTA114YK/RN2407 TE0804L
2Q10, 2Q11	DTR890471	DTA114YK/RN2407 TE0804L
2Q12	DTR810041	2SA 1162Y TE85L
2Q14	DTR838661	2SC 2712LG TE85L
2Q15, 2Q16	DTR890581	DTC114YK/RN1407 TE0804L
2Q17, 2Q18	DTR810041	2SA 1162Y TE85L
2R1, 2R2 to 2R10	DRZ820971	RN73G 2A 20ΩD TD0804N
2R11	DRZ833071	RK73H 2A 82ΩF TD0804N
2R12	DRZ833561	RK73H 2A 36ΩF TD0804N
2R13	DRZ832011	RK73H 2A 100ΩF TD0804N
2R14	DRZ831611	MCR10J 5R6E TD0804N
2R15 to 2R17	DRZ828721	RR1220P-224-B TD0804N
2R18	DRZ828731	RR1220P-244-B TD0804N
2R19	DRZ828711	RR1220P-114-B TD0804N
2R20	DRZ832261	RK73H 2A 1.1KΩF TD0804N
2R21	DRZ832081	RK73H 2A 200ΩF TD0804N
2R22	DRZ833581	RK73H 2A 43ΩF TD0804N
2R24	DRZ833551	RK73H 2A 33ΩF TD0804N
2R25	DRZ833041	RK73H 2A 62ΩF TD0804N
2R26	DRZ828751	RR1220P-474-B TD0804N
2R27	DRZ828741	RR1220P-434-B TD0804N
2R28	DRZ828711	RR1220P-114-B TD0804N
2R29	DRZ832261	RK73H 2A 1.1KΩF TD0804N
2R30	DRZ832081	RK73H 2A 200ΩF TD0804N
2R31, 2R32	DRZ831121	MCR10J 240E TD0804N
2R33	DRZ833581	RK73H 2A 43ΩF TD0804N
2R35 to 2R42	DRZ828761	RR1220P-204-D TD0804N
2R43	DRZ832121	RK73H 2A 300ΩF TD0804N
2R44	DRZ832011	RK73H 2A 100ΩF TD0804N
2R45	DRZ832031	RK73H 2A 120ΩF TD0804N
2R46, 2R47	DRZ831431	MCR10J 335E TD0804N
2R48	DRZ828621	RK73H 1J 51ΩF TD0804N
2R49	DRZ820971	RN73G 2A 20ΩD TD0804N
2R50	DRZ832101	RK73H 2A 240ΩF TD0804N
2R51	DRZ830861	MCR10J 300E TD0804N
2R53	DRZ832531	RK73H 2A 15KΩF TD0804N
2R54	DRZ832251	RK73H 2A 1.0KΩF TD0804N
2R55	DRZ832441	RK73H 2A 6.2KΩF TD0804N
2R56	DRZ832251	RK73H 2A 1.0KΩF TD0804N
2R58	DRZ832051	RK73H 2A 150ΩF TD0804N
2R59	DRZ820971	RN73G 2A 20ΩD TD0804N

CH1 FRONT END 2

CIRCUIT REFERENCE	IWATSU PART NO.	DESCRIPTION
2R60 to 2R62	DRZ832201	RK73H 2A 620ΩF TD0804N
2R63	DRZ820971	RN73G 2A 20ΩD TD0804N
2R64 to 2R67	DRZ832091	RK73H 2A 220ΩF TD0804N
2R68	DRZ832601	RK73H 2A 30KΩF TD0804N
2R69	DRZ832401	RK73H 2A 4.3KΩF TD0804N
2R70	DRZ832281	RK73H 2A 1.3KΩF TD0804N
2R71	DRZ832031	RK73H 2A 120ΩF TD0804N
2R74, 2R75	DRZ828761	RR1220P-204-D TD0804N
2R76	DRZ828711	RR1220P-114-B TD0804N
2R77	DRZ832661	RK73H 2A 51KΩF TD0804N
2R78	DRV810251	G4AT/ST-4TA 5KΩ TE1208L
2R79	DRZ832011	RK73H 2A 100ΩF TD0804N
2R80	DRZ832251	RK73H 2A 1.0KΩF TD0804N
2R81, 2R82	DRZ820861	RN73F 2A 100KΩD TD0804N
2R83	DRZ832321	RK73H 2A 2.0KΩF TD0804N
2R84	DRZ832301	RK73H 2A 1.6KΩF TD0804N
2R85	DDD074121	LP310 1F 202F 302 TE0804N
2R86	DRZ832491	RK73H 2A 10KΩF TD0804N
2R87	DDD074121	LP310 1F 202F 302 TE0804N
2R88	DRZ832491	RK73H 2A 10KΩF TD0804N
2R89	DRZ832251	RK73H 2A 1.0KΩF TD0804N
2R90	DRZ832491	RK73H 2A 10KΩF TD0804N
2R91	DRZ828571	RN73F 2A 510ΩB TD0804N
2R92	DRZ833021	RK73H 2A 51ΩF TD0804N
2R93	DRZ833571	RK73H 2A 39ΩF TD0804N
2R94	DRZ833441	RK73H 2A 10ΩF TD0804N
2R95	DRZ833021	RK73H 2A 51ΩF TD0804N
2R97	DRZ832291	RK73H 2A 1.5KΩF TD0804N
2R98	DRZ832471	RK73H 2A 8.2KΩF TD0804N
2R100	DRZ832301	RK73H 2A 1.6KΩF TD0804N
2R101	DRZ832191	RK73H 2A 560ΩF TD0804N
2R105	DRZ832351	RK73H 2A 2.7KΩF TD0804N
2R106	DRZ832191	RK73H 2A 560ΩF TD0804N
2R107	DRZ832351	RK73H 2A 2.7KΩF TD0804N
2R108	DRZ832191	RK73H 2A 560ΩF TD0804N
2R109	DRZ832011	RK73H 2A 100ΩF TD0804N
2R110	DRZ832321	RK73H 2A 2.0KΩF TD0804N
2R115, 2R116	DRZ833021	RK73H 2A 51ΩF TD0804N
2R120	DRZ832251	RK73H 2A 1.0KΩF TD0804N
2R123 to 2R125	DRZ832011	RK73H 2A 100ΩF TD0804N
2R126	DRZ832251	RK73H 2A 1.0KΩF TD0804N
2R127	DRZ832391	RK73H 2A 3.9KΩF TD0804N
2R128	DRZ832121	RK73H 2A 300ΩF TD0804N
2R129	DRZ832251	RK73H 2A 1.0KΩF TD0804N
2R130	DRZ832391	RK73H 2A 3.9KΩF TD0804N
2R131	DRZ832121	RK73H 2A 300ΩF TD0804N
2RL1, 2RL2	DKD028511	NAS-5W-K-TN-B05 TE2416B
2RL3, 2RL4	DKD030381	NASL-5W-K-TN TE2416B
2RL5	DKD028511	NAS-5W-K-TN-B05 TE2416B

CH2 FRONT END 3

CIRCUIT REFERENCE	IWATSU PART NO.	DESCRIPTION
3C1, 3C2	DCC816471	C2012CH 1H 080D A TD84N
3C3, 3C4	DCC850101	GRM42-6CH 050C500PT TE0804N
3C6	DCV819091	TZBX4 Z250BA110 TE1208R
3C7	DCC816521	C2012CH 1H 220J A TD84N
3C10	DCC850101	GRM42-6CH 050C500PT TE0804N
3C12	DCV819091	TZBX4 Z250BA110 TE1208R
3C13	DCC816521	C2012CH 1H 220J A TD84N
3C14	DCC816451	C2012CH 1H 060D A TD84N
3C15	DCC816381	C2012CH 1H 020C A TD84N
3C18	DCC816491	C2012CH 1H 100D A TD84N
3C19	DCC810511	C2012F 1H 103Z A TD84N
3C20	DCC840041	GHM1530B 473K250 TE0804N
3C21	DCC850011	GRM42-6 W5R 222K500 TE0804N
3C22	DCC850091	GRM42-6CH 020C500PT TE0804N
3C24	DCC816371	C2012CH 1H 1R5C A TD84N
3C25	DCV819051	TZBX4 Z030BA110 TE1208R
3C26	DCC811731	C1608B 1H 102K A TD0804N
3C27 to 3C29	DCC810511	C2012F 1H 103Z A TD84N
3C31	DCC816421	C2012CH 1H 040C A TD84N
3C32 to 3C35	DCC810511	C2012F 1H 103Z A TD84N
3C36	DCC810571	C2012F 1H 104Z A TD0804N
3C37, 3C39	DCC816601	C2012CH 1H 101J A TD84N
3C40	DCC810571	C2012F 1H 104Z A TD0804N
3C41	DCC810981	C2012B 1H 153K A TD84N
3C42	DCC811161	C2012B 1H 333K A TD84N
3C43 to 3C46	DCC810511	C2012F 1H 103Z A TD84N
3C47	DCC811161	C2012B 1H 333K A TD84N
3C48	DCV819051	TZBX4 Z030BA110 TE1208R
3C49	DCC810511	C2012F 1H 103Z A TD84N
3C50	DCE919141	SRA 10VB-100 TC04R
3C51 to 3C53	DCC810511	C2012F 1H 103Z A TD84N
3C54, 3C55	DCC810571	C2012F 1H 104Z A TD0804N
3C58	DCC820021	C2012F 1C 105Z A TD84N
3C59, 3C60	DCC810511	C2012F 1H 103Z A TD84N
3C70 to 3C74	DCC816801	C2012CH 1H 102J A TD84N
3C75, 3C76	DCC820251	C2012B 1C 474K A TD0804N
3C80	DCC810571	C2012F 1H 104Z A TD0804N
3C81	DCC816491	C2012CH 1H 100D A TD84N
3C83 to 3C86	DCC820021	C2012F 1C 105Z A TD84N
3C87	DCC810511	C2012F 1H 103Z A TD84N
3C88	DCC816491	C2012CH 1H 100D A TD84N
3C90 to 3C96	DCC810511	C2012F 1H 103Z A TD84N
3C99	DCC819091	GRM42-6B 106K6.3PT TE0804N
3D1, 3D2	DDD810461	HSM 124S-JTL TE0804L
3D3	DDD810081	1SS 226 (TE85L) TE0804L
3D4 to 3D6	DDD810241	1SS 272 TE0804R
3D7 to 3D9	DDD810461	HSM 124S-JTL TE0804L
3D10, 3D11	DDD810241	1SS 272 TE0804R
3FL1 to 3FL7	DCL870041	NFM39R12C222T1 TE0804N
3IC1	DIC614811	LT 1097S8-T2 TE1208B
3IC2	DIC619191	NJM 082M(TE3) TE1208L
3IC3	DIC614891	HFE428 1GHZ FRONT END

CH2 FRONT END 3

CIRCUIT REFERENCE	IWATSU PART NO.	DESCRIPTION
3IC4	DIC631231	HTR420 TRIGGER COMPARATOR
3IC5	DIC483321	74HC595F/AF TE1612B
3IC6	DIC619271	TA 75S558F (TE85L) TE0804L
3J1A	DCN126091	7093XXP01 PROBUS CONNECTOR
3J1B	DCN045681	CONNECTOR BNC-BR-PC-1
3L1	DCL810831	HK1608 18NJ-T TD0804N
3L2	DCL811011	BLM21A121FPT TD0804N
3L3	DCL810811	HK1608 10NJ-T TD0804N
3L4	DCL811011	BLM21A121FPT TD0804N
3L11 to 3L14	DCL810811	HK1608 10NJ-T TD0804N
3L15 to 3L18	DRZ831801	MCR03 EZH J000E TD0804N
3Q1	DTR860161	2SK 508 K51 TE0804L
3Q2 to 3Q4	DTR830521	2SC 3583-T1B TE0804L
3Q5, 3Q6	DTR810041	2SA 1162Y TE85L
3Q7 to 3Q11	DTR890471	DTA114YK/RN2407 TE0804L
3Q12	DTR810041	2SA 1162Y TE85L
3Q14	DTR838661	2SC 2712LG TE85L
3Q15, 3Q16	DTR890581	DTC114YK/RN1407 TE0804L
3Q17, 3Q18	DTR810041	2SA 1162Y TE85L
3R1 to 3R10	DRZ820971	RN73G 2A 20ΩD TD0804N
3R11	DRZ833071	RK73H 2A 82ΩF TD0804N
3R12	DRZ833561	RK73H 2A 36ΩF TD0804N
3R13	DRZ832011	RK73H 2A 100ΩF TD0804N
3R14	DRZ831611	MCR10J 5R6E TD0804N
3R15 to 3R17	DRZ828721	RR1220P-224-B TD0804N
3R18	DRZ828731	RR1220P-244-B TD0804N
3R19	DRZ828711	RR1220P-114-B TD0804N
3R20	DRZ832261	RK73H 2A 1.1KΩF TD0804N
3R21	DRZ832081	RK73H 2A 200ΩF TD0804N
3R22	DRZ833581	RK73H 2A 43ΩF TD0804N
3R24	DRZ833551	RK73H 2A 33ΩF TD0804N
3R25	DRZ833041	RK73H 2A 62ΩF TD0804N
3R26	DRZ828751	RR1220P-474-B TD0804N
3R27	DRZ828741	RR1220P-434-B TD0804N
3R28	DRZ828711	RR1220P-114-B TD0804N
3R29	DRZ832261	RK73H 2A 1.1KΩF TD0804N
3R30	DRZ832081	RK73H 2A 200ΩF TD0804N
3R31, 3R32	DRZ831121	MCR10J 240E TD0804N
3R33	DRZ833581	RK73H 2A 43ΩF TD0804N
3R35 to 3R42	DRZ828761	RR1220P-204-D TD0804N
3R43	DRZ832121	RK73H 2A 300ΩF TD0804N
3R44	DRZ832011	RK73H 2A 100ΩF TD0804N
3R45	DRZ832031	RK73H 2A 120ΩF TD0804N
3R46, 3R47	DRZ831431	MCR10J 335E TD0804N
3R48	DRZ828621	RK73H 1J 51ΩF TD0804N
3R49	DRZ820971	RN73G 2A 20ΩD TD0804N
3R50	DRZ832101	RK73H 2A 240ΩF TD0804N
3R51	DRZ830861	MCR10J 300E TD0804N
3R53	DRZ832531	RK73H 2A 15KΩF TD0804N
3R54	DRZ832251	RK73H 2A 1.0KΩF TD0804N
3R55	DRZ832441	RK73H 2A 6.2KΩF TD0804N
3R56	DRZ832251	RK73H 2A 1.0KΩF TD0804N
3R58	DRZ832051	RK73H 2A 150ΩF TD0804N

CH2 FRONT END 3

CIRCUIT REFERENCE	IWATSU PART NO.	DESCRIPTION
3R59	DRZ820971	RN73G 2A 20ΩD TD0804N
3R60 to 3R62	DRZ832201	RK73H 2A 620ΩF TD0804N
3R63	DRZ820971	RN73G 2A 20ΩD TD0804N
3R64 to 3R67	DRZ832091	RK73H 2A 220ΩF TD0804N
3R68	DRZ832601	RK73H 2A 30KΩF TD0804N
3R69	DRZ832401	RK73H 2A 4.3KΩF TD0804N
3R70	DRZ832281	RK73H 2A 1.3KΩF TD0804N
3R71	DRZ832031	RK73H 2A 120ΩF TD0804N
3R74, 3R75	DRZ828761	RR1220P-204-D TD0804N
3R76	DRZ828711	RR1220P-114-B TD0804N
3R77	DRZ832661	RK73H 2A 51KΩF TD0804N
3R78	DRV810251	G4AT/ST-4TA 5KΩ TE1208L
3R79	DRZ832011	RK73H 2A 100ΩF TD0804N
3R80	DRZ832251	RK73H 2A 1.0KΩF TD0804N
3R81, 3R82	DRZ820861	RN73F 2A 100KΩD TD0804N
3R83	DRZ832321	RK73H 2A 2.0KΩF TD0804N
3R84	DRZ832301	RK73H 2A 1.6KΩF TD0804N
3R85	DDD074121	LP310 1F 202F 302 TE0804N
3R86	DRZ832491	RK73H 2A 10KΩF TD0804N
3R87	DDD074121	LP310 1F 202F 302 TE0804N
3R88	DRZ832491	RK73H 2A 10KΩF TD0804N
3R89	DRZ832251	RK73H 2A 1.0KΩF TD0804N
3R90	DRZ832491	RK73H 2A 10KΩF TD0804N
3R91	DRZ828571	RN73F 2A 510ΩB TD0804N
3R92	DRZ833021	RK73H 2A 51ΩF TD0804N
3R93	DRZ833571	RK73H 2A 39ΩF TD0804N
3R94	DRZ833441	RK73H 2A 10ΩF TD0804N
3R95	DRZ833021	RK73H 2A 51ΩF TD0804N
3R97	DRZ832291	RK73H 2A 1.5KΩF TD0804N
3R98	DRZ832471	RK73H 2A 8.2KΩF TD0804N
3R100	DRZ832301	RK73H 2A 1.6KΩF TD0804N
3R101	DRZ832191	RK73H 2A 560ΩF TD0804N
3R105	DRZ832351	RK73H 2A 2.7KΩF TD0804N
3R106	DRZ832191	RK73H 2A 560ΩF TD0804N
3R107	DRZ832351	RK73H 2A 2.7KΩF TD0804N
3R108	DRZ832191	RK73H 2A 560ΩF TD0804N
3R109	DRZ832011	RK73H 2A 100ΩF TD0804N
3R110	DRZ832321	RK73H 2A 2.0KΩF TD0804N
3R120	DRZ832251	RK73H 2A 1.0KΩF TD0804N
3R123 to 3R125	DRZ832011	RK73H 2A 100ΩF TD0804N
3R126	DRZ832251	RK73H 2A 1.0KΩF TD0804N
3R127	DRZ832391	RK73H 2A 3.9KΩF TD0804N
3R128	DRZ832121	RK73H 2A 300ΩF TD0804N
3R129	DRZ832251	RK73H 2A 1.0KΩF TD0804N
3R130	DRZ832391	RK73H 2A 3.9KΩF TD0804N
3R131	DRZ832121	RK73H 2A 300ΩF TD0804N
3RL1, 3RL2	DKD028511	NAS-5W-K-TN-B05 TE2416B
3RL3, 3RL4	DKD030381	NASL-5W-K-TN TE2416B
3RL5	DKD028511	NAS-5W-K-TN-B05 TE2416B

CH3 FRONT END 4

CIRCUIT REFERENCE	IWATSU PART NO.	DESCRIPTION
4C1, 4C2	DCC816471	C2012CH 1H 080D A TD84N
4C3, 4C4	DCC850101	GRM42-6CH 050C500PT TE0804N
4C6	DCV819091	TZBX4 Z250BA110 TE1208R
4C7	DCC816521	C2012CH 1H 220J A TD84N
4C10	DCC850101	GRM42-6CH 050C500PT TE0804N
4C12	DCV819091	TZBX4 Z250BA110 TE1208R
4C13	DCC816521	C2012CH 1H 220J A TD84N
4C14	DCC816451	C2012CH 1H 060D A TD84N
4C15	DCC816381	C2012CH 1H 020C A TD84N
4C18	DCC816491	C2012CH 1H 100D A TD84N
4C19	DCC810511	C2012F 1H 103Z A TD84N
4C20	DCC840041	GHM1530B 473K250 TE0804N
4C21	DCC850011	GRM42-6 W5R 222K500 TE0804N
4C22	DCC850091	GRM42-6CH 020C500PT TE0804N
4C24	DCC816371	C2012CH 1H 1R5C A TD84N
4C25	DCV819051	TZBX4 Z030BA110 TE1208R
4C26	DCC811731	C1608B 1H 102K A TD0804N
4C27 to 4C29	DCC810511	C2012F 1H 103Z A TD84N
4C31	DCC816421	C2012CH 1H 040C A TD84N
4C32 to 4C35	DCC810511	C2012F 1H 103Z A TD84N
4C36	DCC810571	C2012F 1H 104Z A TD0804N
4C37, 4C39	DCC816601	C2012CH 1H 101J A TD84N
4C40	DCC810571	C2012F 1H 104Z A TD0804N
4C41	DCC810981	C2012B 1H 153K A TD84N
4C42	DCC811161	C2012B 1H 333K A TD84N
4C43 to 4C46	DCC810511	C2012F 1H 103Z A TD84N
4C47	DCC811161	C2012B 1H 333K A TD84N
4C48	DCV819051	TZBX4 Z030BA110 TE1208R
4C49	DCC810511	C2012F 1H 103Z A TD84N
4C50	DCE919141	SRA 10VB-100 TC04R
4C51 to 4C53	DCC810511	C2012F 1H 103Z A TD84N
4C54, 4C55	DCC810571	C2012F 1H 104Z A TD0804N
4C58	DCC820021	C2012F 1C 105Z A TD84N
4C59, 4C60	DCC810511	C2012F 1H 103Z A TD84N
4C70 to 4C74	DCC816801	C2012CH 1H 102J A TD84N
4C75, 4C76	DCC820251	C2012B 1C 474K A TD0804N
4C80	DCC810571	C2012F 1H 104Z A TD0804N
4C81	DCC816491	C2012CH 1H 100D A TD84N
4C83 to 4C86	DCC820021	C2012F 1C 105Z A TD84N
4C87	DCC810511	C2012F 1H 103Z A TD84N
4C88	DCC816491	C2012CH 1H 100D A TD84N
4C90 to 4C96	DCC810511	C2012F 1H 103Z A TD84N
4C99	DCC819091	GRM42-6B 106K6.3PT TE0804N
4D1, 4D2	DDD810461	HSM 124S-JTL TE0804L
4D3	DDD810081	1SS 226 (TE85L) TE0804L
4D4 to 4D6	DDD810241	1SS 272 TE0804R
4D7 to 4D9	DDD810461	HSM 124S-JTL TE0804L
4D10, 4D11	DDD810241	1SS 272 TE0804R
4FL1 to 4FL7	DCL870041	NFM39R12C222T1 TE0804N
4IC1	DIC614811	LT 1097S8-T2 TE1208B
4IC2	DIC619191	NJM 082M(TE3) TE1208L
4IC3	DIC614891	HFE428 1GHZ FRONT END

CH3 FRONT END 4

CIRCUIT REFERENCE	IWATSU PART NO.	DESCRIPTION
4IC4	DIC631231	HTR420 TRIGGER COMPARATOR
4IC5	DIC483321	74HC595F/AF TE1612B
4IC6	DIC619271	TA 75S558F (TE85L) TE0804L
4J1A	DCN126091	7093XXP01 PROBUS CONNECTOR
4J1B	DCN045681	CONNECTOR BNC-BR-PC-1
4L1	DCL810831	HK1608 18NJ-T TD0804N
4L2	DCL811011	BLM21A121FPT TD0804N
4L3	DCL810811	HK1608 10NJ-T TD0804N
4L4	DCL811011	BLM21A121FPT TD0804N
4L11 to 4L14	DCL810811	HK1608 10NJ-T TD0804N
4L15 to 4L18	DRZ831801	MCR03 EZH J000E TD0804N
4Q1	DTR860161	2SK 508 K51 TE0804L
4Q2 to 4Q4	DTR830521	2SC 3583-T1B TE0804L
4Q5, 4Q6	DTR810041	2SA 1162Y TE85L
4Q7 to 4Q11	DTR890471	DTA114YK/RN2407 TE0804L
4Q12	DTR810041	2SA 1162Y TE85L
4Q14	DTR838661	2SC 2712LG TE85L
4Q15, 4Q16	DTR890581	DTC114YK/RN1407 TE0804L
4Q17, 4Q18	DTR810041	2SA 1162Y TE85L
4R1 to 4R10	DRZ820971	RN73G 2A 20ΩD TD0804N
4R11	DRZ833071	RK73H 2A 82ΩF TD0804N
4R12	DRZ833561	RK73H 2A 36ΩF TD0804N
4R13	DRZ832011	RK73H 2A 100ΩF TD0804N
4R14	DRZ831611	MCR10J 5R6E TD0804N
4R15 to 4R17	DRZ828721	RR1220P-224-B TD0804N
4R18	DRZ828731	RR1220P-244-B TD0804N
4R19	DRZ828711	RR1220P-114-B TD0804N
4R20	DRZ832261	RK73H 2A 1.1KΩF TD0804N
4R21	DRZ832081	RK73H 2A 200ΩF TD0804N
4R22	DRZ833581	RK73H 2A 43ΩF TD0804N
4R24	DRZ833551	RK73H 2A 33ΩF TD0804N
4R25	DRZ833041	RK73H 2A 62ΩF TD0804N
4R26	DRZ828751	RR1220P-474-B TD0804N
4R27	DRZ828741	RR1220P-434-B TD0804N
4R28	DRZ828711	RR1220P-114-B TD0804N
4R29	DRZ832261	RK73H 2A 1.1KΩF TD0804N
4R30	DRZ832081	RK73H 2A 200ΩF TD0804N
4R31, 4R32	DRZ831121	MCR10J 240E TD0804N
4R33	DRZ833581	RK73H 2A 43ΩF TD0804N
4R35 to 4R42	DRZ828761	RR1220P-204-D TD0804N
4R43	DRZ832121	RK73H 2A 300ΩF TD0804N
4R44	DRZ832011	RK73H 2A 100ΩF TD0804N
4R45	DRZ832031	RK73H 2A 120ΩF TD0804N
4R46, 4R47	DRZ831431	MCR10J 335E TD0804N
4R48	DRZ828621	RK73H 1J 51ΩF TD0804N
4R49	DRZ820971	RN73G 2A 20ΩD TD0804N
4R50	DRZ832101	RK73H 2A 240ΩF TD0804N
4R51	DRZ830861	MCR10J 300E TD0804N
4R53	DRZ832531	RK73H 2A 15KΩF TD0804N
4R54	DRZ832251	RK73H 2A 1.0KΩF TD0804N
4R55	DRZ832441	RK73H 2A 6.2KΩF TD0804N
4R56	DRZ832251	RK73H 2A 1.0KΩF TD0804N

CH3 FRONT END 4

CIRCUIT REFERENCE	IWATSU PART NO.	DESCRIPTION
4R58	DRZ832051	RK73H 2A 150ΩF TD0804N
4R59	DRZ820971	RN73G 2A 20ΩD TD0804N
4R60 to 4R62	DRZ832201	RK73H 2A 620ΩF TD0804N
4R63	DRZ820971	RN73G 2A 20ΩD TD0804N
4R64 to 4R67	DRZ832091	RK73H 2A 220ΩF TD0804N
4R68	DRZ832601	RK73H 2A 30KΩF TD0804N
4R69	DRZ832401	RK73H 2A 4.3KΩF TD0804N
4R70	DRZ832281	RK73H 2A 1.3KΩF TD0804N
4R71	DRZ832031	RK73H 2A 120ΩF TD0804N
4R74, 4R75	DRZ828761	RR1220P-204-D TD0804N
4R76	DRZ828711	RR1220P-114-B TD0804N
4R77	DRZ832661	RK73H 2A 51KΩF TD0804N
4R78	DRV810251	G4AT/ST-4TA 5KΩ TE1208L
4R79	DRZ832011	RK73H 2A 100ΩF TD0804N
4R80	DRZ832251	RK73H 2A 1.0KΩF TD0804N
4R81, 4R82	DRZ820861	RN73F 2A 100KΩD TD0804N
4R83	DRZ832321	RK73H 2A 2.0KΩF TD0804N
4R84	DRZ832301	RK73H 2A 1.6KΩF TD0804N
4R85	DDD074121	LP310 1F 202F 302 TE0804N
4R86	DRZ832491	RK73H 2A 10KΩF TD0804N
4R87	DDD074121	LP310 1F 202F 302 TE0804N
4R88	DRZ832491	RK73H 2A 10KΩF TD0804N
4R89	DRZ832251	RK73H 2A 1.0KΩF TD0804N
4R90	DRZ832491	RK73H 2A 10KΩF TD0804N
4R91	DRZ828571	RN73F 2A 510ΩB TD0804N
4R92	DRZ833021	RK73H 2A 51ΩF TD0804N
4R93	DRZ833571	RK73H 2A 39ΩF TD0804N
4R94	DRZ833441	RK73H 2A 10ΩF TD0804N
4R95	DRZ833021	RK73H 2A 51ΩF TD0804N
4R97	DRZ832291	RK73H 2A 1.5KΩF TD0804N
4R98	DRZ832471	RK73H 2A 8.2KΩF TD0804N
4R100	DRZ832301	RK73H 2A 1.6KΩF TD0804N
4R101	DRZ832191	RK73H 2A 560ΩF TD0804N
4R105	DRZ832351	RK73H 2A 2.7KΩF TD0804N
4R106	DRZ832191	RK73H 2A 560ΩF TD0804N
4R107	DRZ832351	RK73H 2A 2.7KΩF TD0804N
4R108	DRZ832191	RK73H 2A 560ΩF TD0804N
4R109	DRZ832011	RK73H 2A 100ΩF TD0804N
4R110	DRZ832321	RK73H 2A 2.0KΩF TD0804N
4R120	DRZ832251	RK73H 2A 1.0KΩF TD0804N
4R123 to 4R125	DRZ832011	RK73H 2A 100ΩF TD0804N
4R126	DRZ832251	RK73H 2A 1.0KΩF TD0804N
4R127	DRZ832391	RK73H 2A 3.9KΩF TD0804N
4R128	DRZ832121	RK73H 2A 300ΩF TD0804N
4R129	DRZ832251	RK73H 2A 1.0KΩF TD0804N
4R130	DRZ832391	RK73H 2A 3.9KΩF TD0804N
4R131	DRZ832121	RK73H 2A 300ΩF TD0804N
4RL1, 4RL2	DKD028511	NAS-5W-K-TN-B05 TE2416B
4RL3, 4RL4	DKD030381	NASL-5W-K-TN TE2416B
4RL5	DKD028511	NAS-5W-K-TN-B05 TE2416B

CH4 FRONT END 5

CIRCUIT REFERENCE	IWATSU PART NO.	DESCRIPTION
5C1, 5C2	DCC816471	C2012CH 1H 080D A TD84N
5C3, 5C4	DCC850101	GRM42-6CH 050C500PT TE0804N
5C6	DCV819091	TZBX4 Z250BA110 TE1208R
5C7	DCC816521	C2012CH 1H 220J A TD84N
5C10	DCC850101	GRM42-6CH 050C500PT TE0804N
5C12	DCV819091	TZBX4 Z250BA110 TE1208R
5C13	DCC816521	C2012CH 1H 220J A TD84N
5C14	DCC816451	C2012CH 1H 060D A TD84N
5C15	DCC816381	C2012CH 1H 020C A TD84N
5C18	DCC816491	C2012CH 1H 100D A TD84N
5C19	DCC810511	C2012F 1H 103Z A TD84N
5C20	DCC840041	GHM1530B 473K250 TE0804N
5C21	DCC850011	GRM42-6 W5R 222K500 TE0804N
5C22	DCC850091	GRM42-6CH 020C500PT TE0804N
5C24	DCC816371	C2012CH 1H 1R5C A TD84N
5C25	DCV819051	TZBX4 Z030BA110 TE1208R
5C26	DCC811731	C1608B 1H 102K A TD0804N
5C27 to 5C29	DCC810511	C2012F 1H 103Z A TD84N
5C31	DCC816421	C2012CH 1H 040C A TD84N
5C32 to 5C35	DCC810511	C2012F 1H 103Z A TD84N
5C36	DCC810571	C2012F 1H 104Z A TD0804N
5C37, 5C39	DCC816601	C2012CH 1H 101J A TD84N
5C40	DCC810571	C2012F 1H 104Z A TD0804N
5C41	DCC810981	C2012B 1H 153K A TD84N
5C42	DCC811161	C2012B 1H 333K A TD84N
5C43 to 5C46	DCC810511	C2012F 1H 103Z A TD84N
5C47	DCC811161	C2012B 1H 333K A TD84N
5C48	DCV819051	TZBX4 Z030BA110 TE1208R
5C49	DCC810511	C2012F 1H 103Z A TD84N
5C50	DCE919141	SRA 10VB-100 TC04R
5C51 to 5C53	DCC810511	C2012F 1H 103Z A TD84N
5C54, 5C55	DCC810571	C2012F 1H 104Z A TD0804N
5C58	DCC820021	C2012F 1C 105Z A TD84N
5C59, 5C60	DCC810511	C2012F 1H 103Z A TD84N
5C70 to 5C74	DCC816801	C2012CH 1H 102J A TD84N
5C75, 5C76	DCC820251	C2012B 1C 474K A TD0804N
5C80	DCC810571	C2012F 1H 104Z A TD0804N
5C81	DCC816491	C2012CH 1H 100D A TD84N
5C83 to 5C86	DCC820021	C2012F 1C 105Z A TD84N
5C87	DCC810511	C2012F 1H 103Z A TD84N
5C88	DCC816491	C2012CH 1H 100D A TD84N
5C90 to 5C96	DCC810511	C2012F 1H 103Z A TD84N
5C99	DCC819091	GRM42-6B 106K6.3PT TE0804N
5D1, 5D2	DDD810461	HSM 124S-JTL TE0804L
5D3	DDD810081	1SS 226 (TE85L) TE0804L
5D4 to 5D6	DDD810241	1SS 272 TE0804R
5D7 to 5D9	DDD810461	HSM 124S-JTL TE0804L
5D10, 5D11	DDD810241	1SS 272 TE0804R
5FL1 to 5FL7	DCL870041	NFM39R12C222T1 TE0804N
5IC1	DIC614811	LT 1097S8-T2 TE1208B
5IC2	DIC619191	NJM 082M(TE3) TE1208L
5IC3	DIC614891	HFE428 1GHZ FRONT END
5IC4	DIC631231	HTR420 TRIGGER COMPARATOR

CH4 FRONT END 5

CIRCUIT REFERENCE	IWATSU PART NO.	DESCRIPTION
5IC5	DIC483321	74HC595F/AF TE1612B
5IC6	DIC619271	TA 75S558F (TE85L) TE0804L
5J1A	DCN126091	7093XXP01 PROBUS CONNECTOR
5J1B	DCN045681	CONNECTOR BNC-BR-PC-1
5L1	DCL810831	HK1608 18NJ-T TD0804N
5L2	DCL811011	BLM21A121FPT TD0804N
5L3	DCL810811	HK1608 10NJ-T TD0804N
5L4	DCL811011	BLM21A121FPT TD0804N
5L11 to 5L14	DCL810811	HK1608 10NJ-T TD0804N
5Q1	DTR860161	2SK 508 K51 TE0804L
5Q2 to 5Q4	DTR830521	2SC 3583-T1B TE0804L
5Q5, 5Q6	DTR810041	2SA 1162Y TE85L
5Q7 to 5Q11	DTR890471	DTA114YK/RN2407 TE0804L
5Q12	DTR810041	2SA 1162Y TE85L
5Q14	DTR838661	2SC 2712LG TE85L
5Q15, 5Q16	DTR890581	DTC114YK/RN1407 TE0804L
5Q17, 5Q18	DTR810041	2SA 1162Y TE85L
5R1 to 5R10	DRZ820971	RN73G 2A 20ΩD TD0804N
5R11	DRZ833071	RK73H 2A 82ΩF TD0804N
5R12	DRZ833561	RK73H 2A 36ΩF TD0804N
5R13	DRZ832011	RK73H 2A 100ΩF TD0804N
5R14	DRZ831611	MCR10J 5R6E TD0804N
5R15 to 5R17	DRZ828721	RR1220P-224-B TD0804N
5R18	DRZ828731	RR1220P-244-B TD0804N
5R19	DRZ828711	RR1220P-114-B TD0804N
5R20	DRZ832261	RK73H 2A 1.1KΩF TD0804N
5R21	DRZ832081	RK73H 2A 200ΩF TD0804N
5R22	DRZ833581	RK73H 2A 43ΩF TD0804N
5R24	DRZ833551	RK73H 2A 33ΩF TD0804N
5R25	DRZ833041	RK73H 2A 62ΩF TD0804N
5R26	DRZ828751	RR1220P-474-B TD0804N
5R27	DRZ828741	RR1220P-434-B TD0804N
5R28	DRZ828711	RR1220P-114-B TD0804N
5R29	DRZ832261	RK73H 2A 1.1KΩF TD0804N
5R30	DRZ832081	RK73H 2A 200ΩF TD0804N
5R31, 5R32	DRZ831121	MCR10J 240E TD0804N
5R33	DRZ833581	RK73H 2A 43ΩF TD0804N
5R35 to 5R42	DRZ828761	RR1220P-204-D TD0804N
5R43	DRZ832121	RK73H 2A 300ΩF TD0804N
5R44	DRZ832011	RK73H 2A 100ΩF TD0804N
5R45	DRZ832031	RK73H 2A 120ΩF TD0804N
5R46, 5R47	DRZ831431	MCR10J 335E TD0804N
5R48	DRZ828621	RK73H 1J 51ΩF TD0804N
5R49	DRZ820971	RN73G 2A 20ΩD TD0804N
5R50	DRZ832101	RK73H 2A 240ΩF TD0804N
5R51	DRZ830861	MCR10J 300E TD0804N
5R53	DRZ832531	RK73H 2A 15KΩF TD0804N
5R54	DRZ832251	RK73H 2A 1.0KΩF TD0804N
5R55	DRZ832441	RK73H 2A 6.2KΩF TD0804N
5R56	DRZ832251	RK73H 2A 1.0KΩF TD0804N
5R58	DRZ832051	RK73H 2A 150ΩF TD0804N
5R59	DRZ820971	RN73G 2A 20ΩD TD0804N

CH4 FRONT END 5

CIRCUIT REFERENCE	IWATSU PART NO.	DESCRIPTION
5R60 to 5R62	DRZ832201	RK73H 2A 620ΩF TD0804N
5R63	DRZ820971	RN73G 2A 20ΩD TD0804N
5R64 to 5R67	DRZ832091	RK73H 2A 220ΩF TD0804N
5R68	DRZ832601	RK73H 2A 30KΩF TD0804N
5R69	DRZ832401	RK73H 2A 4.3KΩF TD0804N
5R70	DRZ832281	RK73H 2A 1.3KΩF TD0804N
5R71	DRZ832031	RK73H 2A 120ΩF TD0804N
5R74, 5R75	DRZ828761	RR1220P-204-D TD0804N
5R76	DRZ828711	RR1220P-114-B TD0804N
5R77	DRZ832661	RK73H 2A 51KΩF TD0804N
5R78	DRV810251	G4AT/ST-4TA 5KΩ TE1208L
5R79	DRZ832011	RK73H 2A 100ΩF TD0804N
5R80	DRZ832251	RK73H 2A 1.0KΩF TD0804N
5R81, 5R82	DRZ820861	RN73F 2A 100KΩD TD0804N
5R83	DRZ832321	RK73H 2A 2.0KΩF TD0804N
5R84	DRZ832301	RK73H 2A 1.6KΩF TD0804N
5R85	DDD074121	LP310 1F 202F 302 TE0804N
5R86	DRZ832491	RK73H 2A 10KΩF TD0804N
5R87	DDD074121	LP310 1F 202F 302 TE0804N
5R88	DRZ832491	RK73H 2A 10KΩF TD0804N
5R89	DRZ832251	RK73H 2A 1.0KΩF TD0804N
5R90	DRZ832491	RK73H 2A 10KΩF TD0804N
5R91	DRZ828571	RN73F 2A 510ΩB TD0804N
5R92	DRZ833021	RK73H 2A 51ΩF TD0804N
5R93	DRZ833571	RK73H 2A 39ΩF TD0804N
5R94	DRZ833441	RK73H 2A 10ΩF TD0804N
5R95	DRZ833021	RK73H 2A 51ΩF TD0804N
5R97	DRZ832291	RK73H 2A 1.5KΩF TD0804N
5R98	DRZ832471	RK73H 2A 8.2KΩF TD0804N
5R100	DRZ832301	RK73H 2A 1.6KΩF TD0804N
5R101	DRZ832191	RK73H 2A 560ΩF TD0804N
5R105	DRZ832351	RK73H 2A 2.7KΩF TD0804N
5R106	DRZ832191	RK73H 2A 560ΩF TD0804N
5R107	DRZ832351	RK73H 2A 2.7KΩF TD0804N
5R108	DRZ832191	RK73H 2A 560ΩF TD0804N
5R109	DRZ832011	RK73H 2A 100ΩF TD0804N
5R110	DRZ832321	RK73H 2A 2.0KΩF TD0804N
5R115, 5R116	DRZ833021	RK73H 2A 51ΩF TD0804N
5R120	DRZ832251	RK73H 2A 1.0KΩF TD0804N
5R123 to 5R125	DRZ832011	RK73H 2A 100ΩF TD0804N
5R126	DRZ832251	RK73H 2A 1.0KΩF TD0804N
5R127	DRZ832391	RK73H 2A 3.9KΩF TD0804N
5R128	DRZ832121	RK73H 2A 300ΩF TD0804N
5R129	DRZ832251	RK73H 2A 1.0KΩF TD0804N
5R130	DRZ832391	RK73H 2A 3.9KΩF TD0804N
5R131	DRZ832121	RK73H 2A 300ΩF TD0804N
5RL1, 5RL2	DKD028511	NAS-5W-K-TN-B05 TE2416B
5RL3, 5RL4	DKD030381	NASL-5W-K-TN TE2416B
5RL5	DKD028511	NAS-5W-K-TN-B05 TE2416B

EXT TRIGGER 6

CIRCUIT REFERENCE	IWATSU PART NO.	DESCRIPTION
6C1	DCC816451	C2012CH 1H 060D A TD84N
6C2	DCC816491	C2012CH 1H 100D A TD84N
6C3, 6C4	DCC850101	GRM42-6CH 050C500PT TE0804N
6C5	DCC816401	C2012CH 1H 030C A TD84N
6C6	DCV819091	TZBX4 Z250BA110 TE1208R
6C7	DCC816531	C2012CH 1H 270J A TD84N
6C19	DCC810511	C2012F 1H 103Z A TD84N
6C18	DCC816491	C2012CH 1H 100D A TD84N
6C21	DCC850011	GRM42-6 W5R 222K500 TE0804N
6C22	DCC850091	GRM42-6CH 020C500PT TE0804N
6C24	DCC816381	C2012CH 1H 020C A TD84N
6C25	DCV819051	TZBX4 Z030BA110 TE1208R
6C26	DCC816801	C2012CH 1H 102J A TD84N
6C27 to 6C29	DCC810511	C2012F 1H 103Z A TD84N
6C31	DCC816451	C2012CH 1H 060D A TD84N
6C32 to 6C34	DCC810511	C2012F 1H 103Z A TD84N
6C36	DCC810511	C2012F 1H 103Z A TD84N
6C37	DCC816801	C2012CH 1H 102J A TD84N
6C39	DCC816601	C2012CH 1H 101J A TD84N
6C40	DCC810571	C2012F 1H 104Z A TD0804N
6C41	DCC810981	C2012B 1H 153K A TD84N
6C42	DCC811161	C2012B 1H 333K A TD84N
6C43, 6C44	DCC810511	C2012F 1H 103Z A TD84N
6C47	DCC820021	C2012F 1C 105Z A TD84N
6C50	DCE919141	SRA 10VB-100 TC04R
6C51 to 6C53	DCC810511	C2012F 1H 103Z A TD84N
6C54, 6C55	DCC810571	C2012F 1H 104Z A TD0804N
6C58	DCC820021	C2012F 1C 105Z A TD84N
6C59 to 6C64	DCC810511	C2012F 1H 103Z A TD84N
6C65	DCC811111	C2012B 1E 104K A TD84N
6C66	DCC810511	C2012F 1H 103Z A TD84N
6C67	DCC816601	C2012CH 1H 101J A TD84N
6C68, 6C69	DCC810511	C2012F 1H 103Z A TD84N
6C70 to 6C72	DCC816801	C2012CH 1H 102J A TD84N
6C75	DCC820251	C2012B 1C 474K A TD0804N
6C80	DCC810571	C2012F 1H 104Z A TD0804N
6C90 to 6C96	DCC810511	C2012F 1H 103Z A TD84N
6C99	DCC819091	GRM42-6B 106K6.3PT TE0804N
6D1, 6D2	DDD810461	HSM 124S-JTL TE0804L
6D3	DDD810081	1SS 226 (TE85L) TE0804L
6D5, 6D6	DDD810241	1SS 272 TE0804R
6D7 to 6D9	DDD810461	HSM 124S-JTL TE0804L
6D10	DDD810241	1SS 272 TE0804R
6D11	DDD810131	1SS 269 TE0804L
6FL1 to 6FL4	DCL870041	NFM39R12C222T1 TE0804N
6FL7	DCL870041	NFM39R12C222T1 TE0804N
6FL10 to 6FL13	DCL870021	NFM41P11C204 TE1204N
6IC1	DIC614811	LT 1097S8-T2 TE1208B
6IC2, 6IC3	DIC619101	NJM 4558M(TE3) TE1206L
6IC4	DIC631231	HTR420 TRIGGER COMPARATOR
6IC5	DIC483321	74HC595F/AF TE1612B
6IC6	DIC322631	MC 10EL16D
6J1A	DCN126091	7093XXP01 PROBUS CONNECTOR

EXT TRIGGER 6

CIRCUIT REFERENCE	IWATSU PART NO.	DESCRIPTION
6J1B	DCN045681	CONNECTOR BNC-BR-PC-1
6L1	DCL810831	HK1608 18NJ-T TD0804N
6L2, 6L4	DCL811011	BLM21A121FPT TD0804N
6Q1	DTR860161	2SK 508 K51 TE0804L
6Q2 to 6Q4	DTR830521	2SC 3583-T1B TE0804L
6Q5, 6Q6	DTR810041	2SA 1162Y TE85L
6Q7 to 6Q9	DTR890471	DTA114YK/RN2407 TE0804L
6Q10	DTR830521	2SC 3583-T1B TE0804L
6Q12	DTR810041	2SA 1162Y TE85L
6Q14	DTR838661	2SC 2712LG TE85L
6Q15	DTR890581	DTC114YK/RN1407 TE0804L
6Q17	DTR810041	2SA 1162Y TE85L
6R1 to 6R10	DRZ820971	RN73G 2A 20ΩD TD0804N
6R11	DRZ833071	RK73H 2A 82ΩF TD0804N
6R12	DRZ833531	RK73H 2A 27ΩF TD0804N
6R13	DRZ832151	RK73H 2A 390ΩF TD0804N
6R14	DRZ830861	MCR10J 300E TD0804N
6R15 to 6R17	DRZ828721	RR1220P-224-B TD0804N
6R18	DRZ828731	RR1220P-244-B TD0804N
6R19	DRZ828711	RR1220P-114-B TD0804N
6R20	DRZ832261	RK73H 2A 1.1KΩF TD0804N
6R21	DRZ832091	RK73H 2A 220ΩF TD0804N
6R22	DRZ820971	RN73G 2A 20ΩD TD0804N
6R24	DRZ833031	RK73H 2A 56ΩF TD0804N
6R35 to 6R39	DRZ828761	RR1220P-204-D TD0804N
6R44	DRZ832011	RK73H 2A 100ΩF TD0804N
6R45	DRZ832051	RK73H 2A 150ΩF TD0804N
6R46, 6R47	DRZ831431	MCR10J 335E TD0804N
6R48	DRZ833021	RK73H 2A 51ΩF TD0804N
6R49	DRZ820971	RN73G 2A 20ΩD TD0804N
6R50	DRZ832101	RK73H 2A 240ΩF TD0804N
6R51	DRZ830861	MCR10J 300E TD0804N
6R53	DRZ832531	RK73H 2A 15KΩF TD0804N
6R54	DRZ832251	RK73H 2A 1.0KΩF TD0804N
6R55	DRZ832441	RK73H 2A 6.2KΩF TD0804N
6R56	DRZ832251	RK73H 2A 1.0KΩF TD0804N
6R58	DRZ832051	RK73H 2A 150ΩF TD0804N
6R59	DRZ820971	RN73G 2A 20ΩD TD0804N
6R60 to 6R62	DRZ832201	RK73H 2A 620ΩF TD0804N
6R63	DRZ820971	RN73G 2A 20ΩD TD0804N
6R64 to 6R67	DRZ832101	RK73H 2A 240ΩF TD0804N
6R68	DRZ832601	RK73H 2A 30KΩF TD0804N
6R69	DRZ832411	RK73H 2A 4.7KΩF TD0804N
6R70	DRZ832101	RK73H 2A 240ΩF TD0804N
6R72	DRZ831121	MCR10J 240E TD0804N
6R74	DRZ828761	RR1220P-204-D TD0804N
6R76	DRZ828711	RR1220P-114-B TD0804N
6R77	DRZ832251	RK73H 2A 1.0KΩF TD0804N
6R78	DRZ832661	RK73H 2A 51KΩF TD0804N
6R79	DRZ832391	RK73H 2A 3.9KΩF TD0804N
6R80	DRZ832631	RK73H 2A 39KΩF TD0804N
6R81	DRZ832361	RK73H 2A 3.0KΩF TD0804N
6R83	DRZ832321	RK73H 2A 2.0KΩF TD0804N

EXT TRIGGER 6

CIRCUIT REFERENCE	IWATSU PART NO.	DESCRIPTION
6R84	DRZ832301	RK73H 2A 1.6KΩF TD0804N
6R85	DDD074121	LP310 1F 202F 302 TE0804N
6R86	DRZ832491	RK73H 2A 10KΩF TD0804N
6R87	DDD074121	LP310 1F 202F 302 TE0804N
6R88	DRZ832491	RK73H 2A 10KΩF TD0804N
6R89	DRZ832251	RK73H 2A 1.0KΩF TD0804N
6R90	DRZ832491	RK73H 2A 10KΩF TD0804N
6R91	DRZ828571	RN73F 2A 510ΩB TD0804N
6R92	DRZ833021	RK73H 2A 51ΩF TD0804N
6R93	DRZ833011	RK73H 2A 47ΩF TD0804N
6R94	DRZ833441	RK73H 2A 10ΩF TD0804N
6R97	DRZ832291	RK73H 2A 1.5KΩF TD0804N
6R98	DRZ832471	RK73H 2A 8.2KΩF TD0804N
6R100	DRZ831121	MCR10J 240E TD0804N
6R101	DRZ832421	RK73H 2A 5.1KΩF TD0804N
6R105	DRZ832331	RK73H 2A 2.2KΩF TD0804N
6R106	DRZ832191	RK73H 2A 560ΩF TD0804N
6R107	DRZ832331	RK73H 2A 2.2KΩF TD0804N
6R108	DRZ832191	RK73H 2A 560ΩF TD0804N
6R109	DRZ832011	RK73H 2A 100ΩF TD0804N
6R110	DRZ832321	RK73H 2A 2.0KΩF TD0804N
6R120	DRZ832251	RK73H 2A 1.0KΩF TD0804N
6R123 to 6R125	DRZ832011	RK73H 2A 100ΩF TD0804N
6R126	DRZ832251	RK73H 2A 1.0KΩF TD0804N
6R127	DRZ832391	RK73H 2A 3.9KΩF TD0804N
6R128	DRZ832121	RK73H 2A 300ΩF TD0804N
6R150	DRZ832011	RK73H 2A 100ΩF TD0804N
6R151, 6R152	DRZ832491	RK73H 2A 10KΩF TD0804N
6R154	DRZ820971	RN73G 2A 20ΩD TD0804N
6R155, 6R156	DRZ832251	RK73H 2A 1.0KΩF TD0804N
6R157	DRZ832051	RK73H 2A 150ΩF TD0804N
6R158 to 6R161	DRZ832491	RK73H 2A 10KΩF TD0804N
6R162	DRZ832081	RK73H 2A 200ΩF TD0804N
6R163	DRZ832321	RK73H 2A 2.0KΩF TD0804N
6RL1, 6RL2	DKD028511	NAS-5W-K-TN-B05 TE2416B
6RL3	DKD030381	NASL-5W-K-TN TE2416B

CH1 A/D CNVT 7

CIRCUIT REFERENCE	IWATSU PART NO.	DESCRIPTION
7C1	DCC810511	C2012F 1H 103Z A TD84N
7C3	DCC816641	C2012CH 1H 221J A TD84N
7C5	DCC820021	C2012F 1C 105Z A TD84N
7C6, 7C11, 7C12	DCC810511	C2012F 1H 103Z A TD84N
7C13	DCC820021	C2012F 1C 105Z A TD84N
7C20	DCC810511	C2012F 1H 103Z A TD84N
7C22	DCC810571	C2012F 1H 104Z A TD0804N
7C30	DCC820021	C2012F 1C 105Z A TD84N
7C31, 7C32	DCC810571	C2012F 1H 104Z A TD0804N
7C40, 7C46	DCC820021	C2012F 1C 105Z A TD84N
7C47	DCC810511	C2012F 1H 103Z A TD84N
7C50	DCC816801	C2012CH 1H 102J A TD84N
7C51	DCC820121	EMK325F 106ZH-T TE0804N
7C52 to 7C54	DCC810511	C2012F 1H 103Z A TD84N
7C55	DCE219051	SME-CE04W 1A 101M TC04R
7C56	DCC810511	C2012F 1H 103Z A TD84N
7C57 to 7C59	DCC820121	EMK325F 106ZH-T TE0804N
7C60	DCC810571	C2012F 1H 104Z A TD0804N
7C61 to 7C63	DCC810511	C2012F 1H 103Z A TD84N
7C64	DCC820121	EMK325F 106ZH-T TE0804N
7C65	DCC810571	C2012F 1H 104Z A TD0804N
7C66	DCC810511	C2012F 1H 103Z A TD84N
7C67	DCE219151	SME-CE04W 1A 471M TC04R
7C68, 7C69	DCC820121	EMK325F 106ZH-T TE0804N
7C70 to 7C73	DCC810571	C2012F 1H 104Z A TD0804N
7C74	DCC820121	EMK325F 106ZH-T TE0804N
7C80	DCE219051	SME-CE04W 1A 101M TC04R
7C81, 7C83	DCC820031	C2012F 1C 224Z A TD84N
7C84	DCE219051	SME-CE04W 1A 101M TC04R
7C85	DCC820031	C2012F 1C 224Z A TD84N
7C86	DCE229201	SME-CE04W 1E 470M TC04R
7C87	DCC820031	C2012F 1C 224Z A TD84N
7C88	DCE229201	SME-CE04W 1E 470M TC04R
7C89	DCC820031	C2012F 1C 224Z A TD84N
7C90 to 7C92	DCC810571	C2012F 1H 104Z A TD0804N
7C94, 7C95	DCC810511	C2012F 1H 103Z A TD84N
7C96	DCC810571	C2012F 1H 104Z A TD0804N
7FL1 to 7FL3	DCL870021	NFM41P11C204 TE1204N
7IC1	DIC642371	HAD626 500MS/S ADC
7IC2	DIC619101	NJM 4558M(TE3) TE1208L
7IC3, 7IC4	DIC619271	TA 75S558F (TE85L) TE0804L
7J1	DCN126131	89177-5600
7L4 to 7L8	DCL119361	BL02RN2-R62 TD04N
7Q1	DTR890841	IMX3 TE0804R
7Q2, 7Q3	DTR830481	2SC 2873-Y TE1208L
7Q4	DTR129011	2SB 605K/L TRB
7Q5	DTR810161	2SA 1213-Y TE12L
7R1	DRZ832531	RK73H 2A 15KΩF TD0804N
7R2	DRZ832721	RK73H 2A 91KΩF TD0804N
7R3	DRZ832361	RK73H 2A 3.0KΩF TD0804N
7R4	DRZ832341	RK73H 2A 2.4KΩF TD0804N
7R10	DRZ832491	RK73H 2A 10KΩF TD0804N

CH1 A/D CNVT 7

CIRCUIT REFERENCE	IWATSU PART NO.	DESCRIPTION
7R11	DRZ832321	RK73H 2A 2.0KΩF TD0804N
7R12	DRZ832301	RK73H 2A 1.6KΩF TD0804N
7R13	DRZ833061	RK73H 2A 75ΩF TD0804N
7R14	DRZ832051	RK73H 2A 150ΩF TD0804N
7R15 to 7R17	DRZ832251	RK73H 2A 1.0KΩF TD0804N
7R20	DRZ832341	RK73H 2A 2.4KΩF TD0804N
7R21	DRZ832481	RK73H 2A 9.1KΩF TD0804N
7R22	DRZ832311	RK73H 2A 1.8KΩF TD0804N
7R25	DRZ832251	RK73H 2A 1.0KΩF TD0804N
7R26	DRZ832211	RK73H 2A 680ΩF TD0804N
7R30	DRZ832321	RK73H 2A 2.0KΩF TD0804N
7R31	DRZ832311	RK73H 2A 1.8KΩF TD0804N
7R32, 7R33	DRZ833061	RK73H 2A 75ΩF TD0804N
7R34	DRZ833551	RK73H 2A 33ΩF TD0804N
7R35	DRZ832251	RK73H 2A 1.0KΩF TD0804N
7R40 to 7R43	DRZ833491	RK73H 2A 18ΩF TD0804N
7R46, 7R47	DRZ832351	RK73H 2A 2.7KΩF TD0804N
7R48, 7R49	DRZ832281	RK73H 2A 1.3KΩF TD0804N
7R50	DRZ832171	RK73H 2A 470ΩF TD0804N
7R51	DRZ832351	RK73H 2A 2.7KΩF TD0804N
7R52	DRZ832121	RK73H 2A 300ΩF TD0804N
7R53	DRZ832111	RK73H 2A 270ΩF TD0804N
7R54	DRZ831591	MCR10J 4R7E TD0804N

CH2 A/D CNVT 8

CIRCUIT REFERENCE	IWATSU PART NO.	DESCRIPTION
8C1	DCC810511	C2012F 1H 103Z A TD84N
8C3	DCC816641	C2012CH 1H 221J A TD84N
8C5	DCC820021	C2012F 1C 105Z A TD84N
8C6, 8C11, 8C12	DCC810511	C2012F 1H 103Z A TD84N
8C13	DCC820021	C2012F 1C 105Z A TD84N
8C20	DCC810511	C2012F 1H 103Z A TD84N
8C22	DCC810571	C2012F 1H 104Z A TD0804N
8C30	DCC820021	C2012F 1C 105Z A TD84N
8C31, 8C32	DCC810571	C2012F 1H 104Z A TD0804N
8C40, 8C46	DCC820021	C2012F 1C 105Z A TD84N
8C47	DCC810511	C2012F 1H 103Z A TD84N
8C50	DCC816801	C2012CH 1H 102J A TD84N
8C51	DCC820121	EMK325F 106ZH-T TE0804N
8C52 to 8C54	DCC810511	C2012F 1H 103Z A TD84N
8C55	DCE219051	SME-CE04W 1A 101M TC04R
8C56	DCC810511	C2012F 1H 103Z A TD84N
8C57 to 8C59	DCC820121	EMK325F 106ZH-T TE0804N
8C60	DCC810571	C2012F 1H 104Z A TD0804N
8C61 to 8C63	DCC810511	C2012F 1H 103Z A TD84N
8C64	DCC820121	EMK325F 106ZH-T TE0804N
8C65	DCC810571	C2012F 1H 104Z A TD0804N
8C66	DCC810511	C2012F 1H 103Z A TD84N
8C67	DCE219151	SME-CE04W 1A 471M TC04R
8C68, 8C69	DCC820121	EMK325F 106ZH-T TE0804N
8C70 to 8C73	DCC810571	C2012F 1H 104Z A TD0804N
8C74	DCC820121	EMK325F 106ZH-T TE0804N
8C80	DCE219051	SME-CE04W 1A 101M TC04R
8C81, 8C83	DCC820031	C2012F 1C 224Z A TD84N
8C84	DCE219051	SME-CE04W 1A 101M TC04R
8C85	DCC820031	C2012F 1C 224Z A TD84N
8C86	DCE229201	SME-CE04W 1E 470M TC04R
8C87	DCC820031	C2012F 1C 224Z A TD84N
8C88	DCE229201	SME-CE04W 1E 470M TC04R
8C89	DCC820031	C2012F 1C 224Z A TD84N
8C90 to 8C92	DCC810571	C2012F 1H 104Z A TD0804N
8C94, 8C95	DCC810511	C2012F 1H 103Z A TD84N
8C96	DCC810571	C2012F 1H 104Z A TD0804N
8FL1 to 8FL3	DCL870021	NFM41P11C204 TE1204N
8IC1	DIC642371	HAD626 500MS/S ADC
8IC2	DIC619101	NJM 4558M(TE3) TE1208L
8IC3, 8IC4	DIC619271	TA 75S558F (TE85L) TE0804L
8J1	DCN126131	89177-5600
8L4 to 8L8	DCL119361	BL02RN2-R62 TD04N
8Q1	DTR890841	IMX3 TE0804R
8Q2, 8Q3	DTR830481	2SC 2873-Y TE1208L
8Q4	DTR129011	2SB 605K/L TRB
8Q5	DTR810161	2SA 1213-Y TE12L
8R1	DRZ832531	RK73H 2A 15KΩF TD0804N
8R2	DRZ832721	RK73H 2A 91KΩF TD0804N
8R3	DRZ832361	RK73H 2A 3.0KΩF TD0804N
8R4	DRZ832341	RK73H 2A 2.4KΩF TD0804N
8R10	DRZ832491	RK73H 2A 10KΩF TD0804N
8R11	DRZ832321	RK73H 2A 2.0KΩF TD0804N

CH2 A/D CNVT 8

CIRCUIT REFERENCE	IWATSU PART NO.	DESCRIPTION
8R12	DRZ832301	RK73H 2A 1.6KΩF TD0804N
8R13	DRZ833061	RK73H 2A 75ΩF TD0804N
8R14	DRZ832051	RK73H 2A 150ΩF TD0804N
8R15 to 8R17	DRZ832251	RK73H 2A 1.0KΩF TD0804N
8R20	DRZ832341	RK73H 2A 2.4KΩF TD0804N
8R21	DRZ832481	RK73H 2A 9.1KΩF TD0804N
8R22	DRZ832311	RK73H 2A 1.8KΩF TD0804N
8R25	DRZ832251	RK73H 2A 1.0KΩF TD0804N
8R26	DRZ832211	RK73H 2A 680ΩF TD0804N
8R30	DRZ832321	RK73H 2A 2.0KΩF TD0804N
8R31	DRZ832311	RK73H 2A 1.8KΩF TD0804N
8R32, 8R33	DRZ833061	RK73H 2A 75ΩF TD0804N
8R34	DRZ833551	RK73H 2A 33ΩF TD0804N
8R35	DRZ832251	RK73H 2A 1.0KΩF TD0804N
8R40 to 8R43	DRZ833491	RK73H 2A 18ΩF TD0804N
8R46, 8R47	DRZ832351	RK73H 2A 2.7KΩF TD0804N
8R48, 8R49	DRZ832281	RK73H 2A 1.3KΩF TD0804N
8R50	DRZ832171	RK73H 2A 470ΩF TD0804N
8R51	DRZ832351	RK73H 2A 2.7KΩF TD0804N
8R52	DRZ832121	RK73H 2A 300ΩF TD0804N
8R53	DRZ832111	RK73H 2A 270ΩF TD0804N
8R54	DRZ831591	MCR10J 4R7E TD0804N

CH3 A/D CNVT 9

CIRCUIT REFERENCE	IWATSU PART NO.	DESCRIPTION
9C1	DCC810511	C2012F 1H 103Z A TD84N
9C3	DCC816641	C2012CH 1H 221J A TD84N
9C5	DCC820021	C2012F 1C 105Z A TD84N
9C6, 9C11, 9C12	DCC810511	C2012F 1H 103Z A TD84N
9C13	DCC820021	C2012F 1C 105Z A TD84N
9C20	DCC810511	C2012F 1H 103Z A TD84N
9C22	DCC810571	C2012F 1H 104Z A TD0804N
9C30	DCC820021	C2012F 1C 105Z A TD84N
9C31, 9C32	DCC810571	C2012F 1H 104Z A TD0804N
9C40, 9C46	DCC820021	C2012F 1C 105Z A TD84N
9C47	DCC810511	C2012F 1H 103Z A TD84N
9C50	DCC816801	C2012CH 1H 102J A TD84N
9C51	DCC820121	EMK325F 106ZH-T TE0804N
9C52 to 9C54	DCC810511	C2012F 1H 103Z A TD84N
9C55	DCE219051	SME-CE04W 1A 101M TC04R
9C56	DCC810511	C2012F 1H 103Z A TD84N
9C57 to 9C59	DCC820121	EMK325F 106ZH-T TE0804N
9C60	DCC810571	C2012F 1H 104Z A TD0804N
9C61 to 9C63	DCC810511	C2012F 1H 103Z A TD84N
9C64	DCC820121	EMK325F 106ZH-T TE0804N
9C65	DCC810571	C2012F 1H 104Z A TD0804N
9C66	DCC810511	C2012F 1H 103Z A TD84N
9C67	DCE219151	SME-CE04W 1A 471M TC04R
9C68, 9C69	DCC820121	EMK325F 106ZH-T TE0804N
9C70 to 9C73	DCC810571	C2012F 1H 104Z A TD0804N
9C74	DCC820121	EMK325F 106ZH-T TE0804N
9C80	DCE219051	SME-CE04W 1A 101M TC04R
9C81, 9C83	DCC820031	C2012F 1C 224Z A TD84N
9C84	DCE219051	SME-CE04W 1A 101M TC04R
9C85	DCC820031	C2012F 1C 224Z A TD84N
9C86	DCE229201	SME-CE04W 1E 470M TC04R
9C87	DCC820031	C2012F 1C 224Z A TD84N
9C88	DCE229201	SME-CE04W 1E 470M TC04R
9C89	DCC820031	C2012F 1C 224Z A TD84N
9C90 to 9C92	DCC810571	C2012F 1H 104Z A TD0804N
9C94, 9C95	DCC810511	C2012F 1H 103Z A TD84N
9C96	DCC810571	C2012F 1H 104Z A TD0804N
9FL1 to 9FL3	DCL870021	NFM41P11C204 TE1204N
9IC1	DIC642371	HAD626 500MS/S ADC
9IC2	DIC619101	NJM 4558M(TE3) TE1208L
9IC3, 9IC4	DIC619271	TA 75S558F (TE85L) TE0804L
9J1	DCN126131	89177-5600
9L4 to 9L8	DCL119361	BL02RN2-R62 TD04N
9Q1	DTR890841	IMX3 TE0804R
9Q2, 9Q3	DTR830481	2SC 2873-Y TE1208L
9Q4	DTR129011	2SB 605K/L TRB
9Q5	DTR810161	2SA 1213-Y TE12L
9R1	DRZ832531	RK73H 2A 15KΩF TD0804N
9R2	DRZ832721	RK73H 2A 91KΩF TD0804N
9R3	DRZ832361	RK73H 2A 3.0KΩF TD0804N
9R4	DRZ832341	RK73H 2A 2.4KΩF TD0804N
9R10	DRZ832491	RK73H 2A 10KΩF TD0804N

CH3 A/D CNVT 9

CIRCUIT REFERENCE	IWATSU PART NO	DESCRIPTION
9R11	DRZ832321	RK73H 2A 2.0KΩF TD0804N
9R12	DRZ832301	RK73H 2A 1.6KΩF TD0804N
9R13	DRZ833061	RK73H 2A 75ΩF TD0804N
9R14	DRZ832051	RK73H 2A 150ΩF TD0804N
9R15 to 9R17	DRZ832251	RK73H 2A 1.0KΩF TD0804N
9R20	DRZ832341	RK73H 2A 2.4KΩF TD0804N
9R21	DRZ832481	RK73H 2A 9.1KΩF TD0804N
9R22	DRZ832311	RK73H 2A 1.8KΩF TD0804N
9R25	DRZ832251	RK73H 2A 1.0KΩF TD0804N
9R26	DRZ832211	RK73H 2A 680ΩF TD0804N
9R30	DRZ832221	RK73H 2A 2.0KΩF TD0804N
9R31	DRZ832311	RK73H 2A 1.8KΩF TD0804N
9R32, 9R33	DRZ833061	RK73H 2A 75ΩF TD0804N
9R34	DRZ833551	RK73H 2A 33ΩF TD0804N
9R35	DRZ832251	RK73H 2A 1.0KΩF TD0804N
9R40 to 9R43	DRZ833491	RK73H 2A 18ΩF TD0804N
9R46, 9R47	DRZ832351	RK73H 2A 2.7KΩF TD0804N
9R48, 9R49	DRZ832281	RK73H 2A 1.3KΩF TD0804N
9R50	DRZ832171	RK73H 2A 470ΩF TD0804N
9R51	DRZ832351	RK73H 2A 2.7KΩF TD0804N
9R52	DRZ832121	RK73H 2A 300ΩF TD0804N
9R53	DRZ832111	RK73H 2A 270ΩF TD0804N
9R54	DRZ831591	MCR10J 4R7E TD0804N

CH4 A/D CNVT 10

CIRCUIT REFERENCE	IWATSU PART NO.	DESCRIPTION
10C1	DCC810511	C2012F 1H 103Z A TD84N
10C3	DCC816641	C2012CH 1H 221J A TD84N
10C5	DCC820021	C2012F 1C 105Z A TD84N
10C6, 10C11, 10C12	DCC810511	C2012F 1H 103Z A TD84N
10C13	DCC820021	C2012F 1C 105Z A TD84N
10C20	DCC810511	C2012F 1H 103Z A TD84N
10C22	DCC810571	C2012F 1H 104Z A TD0804N
10C30	DCC820021	C2012F 1C 105Z A TD84N
10C31, 10C32	DCC810571	C2012F 1H 104Z A TD0804N
10C40, 10C46	DCC820021	C2012F 1C 105Z A TD84N
10C47	DCC810511	C2012F 1H 103Z A TD84N
10C50	DCC816801	C2012CH 1H 102J A TD84N
10C51	DCC820121	EMK325F 106ZH-T TE0804N
10C52 to 10C54	DCC810511	C2012F 1H 103Z A TD84N
10C55	DCE219051	SME-CE04W 1A 101M TC04R
10C56	DCC810511	C2012F 1H 103Z A TD84N
10C57 to 10C59	DCC820121	EMK325F 106ZH-T TE0804N
10C60	DCC810571	C2012F 1H 104Z A TD0804N
10C61 to 10C63	DCC810511	C2012F 1H 103Z A TD84N
10C64	DCC820121	EMK325F 106ZH-T TE0804N
10C65	DCC810571	C2012F 1H 104Z A TD0804N
10C66	DCC810511	C2012F 1H 103Z A TD84N
10C67	DCE219151	SME-CE04W 1A 471M TC04R
10C68, 10C69	DCC820121	EMK325F 106ZH-T TE0804N
10C70 to 10C73	DCC810571	C2012F 1H 104Z A TD0804N
10C74	DCC820121	EMK325F 106ZH-T TE0804N
10C80	DCE219051	SME-CE04W 1A 101M TC04R
10C81, 10C83	DCC820031	C2012F 1C 224Z A TD84N
10C84	DCE219051	SME-CE04W 1A 101M TC04R
10C85	DCC820031	C2012F 1C 224Z A TD84N
10C86	DCE229201	SME-CE04W 1E 470M TC04R
10C87	DCC820031	C2012F 1C 224Z A TD84N
10C88	DCE229201	SME-CE04W 1E 470M TC04R
10C89	DCC820031	C2012F 1C 224Z A TD84N
10C90 to 10C92	DCC810571	C2012F 1H 104Z A TD0804N
10C94, 10C95	DCC810511	C2012F 1H 103Z A TD84N
10C96	DCC810571	C2012F 1H 104Z A TD0804N
10FL1 to 10FL3	DCL870021	NFM41P11C204 TE1204N
10IC1	DIC642371	HAD626 500MS/S ADC
10IC2	DIC619101	NJM 4558M(TE3) TE1208L
10IC3, 10IC4	DIC619271	TA 75S558F (TE85L) TE0804L
10J1	DCN126131	89177-5600
10L4 to 10L8	DCL119361	BL02RN2-R62 TD04N
10Q1	DTR890841	IMX3 TE0804R
10Q2, 10Q3	DTR830481	2SC 2873-Y TE1208L
10Q4	DTR129011	2SB 605K/L TRB
10Q5	DTR810161	2SA 1213-Y TE12L
10R1	DRZ832531	RK73H 2A 15KΩF TD0804N
10R2	DRZ832721	RK73H 2A 91KΩF TD0804N
10R3	DRZ832361	RK73H 2A 3.0KΩF TD0804N
10R4	DRZ832341	RK73H 2A 2.4KΩF TD0804N
10R10	DRZ832491	RK73H 2A 10KΩF TD0804N
10R11	DRZ832321	RK73H 2A 2.0KΩF TD0804N

CH4 A/D CNVT [10]

CIRCUIT REFERENCE	IWATSU PART NO.	DESCRIPTION
10R12	DRZ832301	RK73H 2A 1.6KΩF TD0804N
10R13	DRZ833061	RK73H 2A 75ΩF TD0804N
10R14	DRZ832051	RK73H 2A 150ΩF TD0804N
10R15 to 10R17	DRZ832251	RK73H 2A 1.0KΩF TD0804N
10R20	DRZ832341	RK73H 2A 2.4KΩF TD0804N
10R21	DRZ832481	RK73H 2A 9.1KΩF TD0804N
10R22	DRZ832311	RK73H 2A 1.8KΩF TD0804N
10R25	DRZ832251	RK73H 2A 1.0KΩF TD0804N
10R26	DRZ832211	RK73H 2A 680ΩF TD0804N
10R30	DRZ832321	RK73H 2A 2.0KΩF TD0804N
10R31	DRZ832311	RK73H 2A 1.8KΩF TD0804N
10R32, 10R33	DRZ833061	RK73H 2A 75ΩF TD0804N
10R34	DRZ833551	RK73H 2A 33ΩF TD0804N
10R35	DRZ832251	RK73H 2A 1.0KΩF TD0804N
10R40 to 10R43	DRZ833491	RK73H 2A 18ΩF TD0804N
10R46, 10R47	DRZ832351	RK73H 2A 2.7KΩF TD0804N
10R48, 10R49	DRZ832281	RK73H 2A 1.3KΩF TD0804N
10R50	DRZ832171	RK73H 2A 470ΩF TD0804N
10R51	DRZ832351	RK73H 2A 2.7KΩF TD0804N
10R52	DRZ832121	RK73H 2A 300ΩF TD0804N
10R53	DRZ832111	RK73H 2A 270ΩF TD0804N
10R54	DRZ831591	MCR10J 4R7E TD0804N

TRIG SELECTOR [11]

CIRCUIT REFERENCE	IWATSU PART NO.	DESCRIPTION
11C1	DCC810571	C2012F 1H 104Z A TD0804N
11C2	DCC820021	C2012F 1C 105Z A TD84N
11C3, 11C5	DCC810571	C2012F 1H 104Z A TD0804N
11C7, 11C9	DCC810571	C2012F 1H 104Z A TD0804N
11C10	DCC820021	C2012F 1C 105Z A TD84N
11C11	DCC810571	C2012F 1H 104Z A TD0804N
11C12	DCC820021	C2012F 1C 105Z A TD84N
11C13, 11C15	DCC810571	C2012F 1H 104Z A TD0804N
11C17, 11C19	DCC810571	C2012F 1H 104Z A TD0804N
11C20	DCC820021	C2012F 1C 105Z A TD84N
11C21	DCC810511	C2012F 1H 103Z A TD84N
11C23	DCC816401	C2012CH 1H 030C A TD84N
11C25	DCC816521	C2012CH 1H 220J A TD84N
11C26	DCC810571	C2012F 1H 104Z A TD0804N
11C31	DCC810511	C2012F 1H 103Z A TD84N
11C33	DCC816401	C2012CH 1H 030C A TD84N
11C35	DCC816521	C2012CH 1H 220J A TD84N
11C36	DCC810571	C2012F 1H 104Z A TD0804N
11C37	DCC816521	C2012CH 1H 220J A TD84N
11C38	DCC810511	C2012F 1H 103Z A TD84N
11C42	DCC816521	C2012CH 1H 220J A TD84N
11C43	DCC810571	C2012F 1H 104Z A TD0804N
11C54, 11C56	DCC810511	C2012F 1H 103Z A TD84N
11C57	DCC810571	C2012F 1H 104Z A TD0804N
11C70 to 11C73	DCC810571	C2012F 1H 104Z A TD0804N
11C74	DCC820121	EMK325F 106ZH-T TE0804N
11C75	DCE219051	SME-CE04W 1A 101M TC04R
11C76 to 11C82	DCC810571	C2012F 1H 104Z A TD0804N
11D1	DDD810241	1SS 272 TE0804R
11DL1, 11DL2	DZB999061	LDH33A202B TE1208B
11DL4 to 11DL7	DZB999071	LDH33A801B TE1208B
11FL1	DCL870021	NFM41P11C204 TE1204N
11IC1, 11IC2	DIC322671	MC 10E116FN/SY 10E116JC
11IC3	DIC322931	MC 10E157FN
11IC4	DIC891061	MST412 SMART TRIGGER IC
11IC5	DIC322831	MC 10EL11D
11IC6	DIC499821	TC7S04F/SC7S04F TE0804L
11IC7	DIC322721	MC 10H102M
11L1	DCL811011	BLM21A121FPT TD0804N
11Q1	DTR149011	2SD 571K/L TRB
11Q2	DTR890761	IMX5 TE0804R
11R1 to 11R21	DRZ833021	RK73H 2A 51ΩF TD0804N
11R22	DRZ832311	RK73H 2A 1.8KΩF TD0804N
11R23	DRZ832371	RK73H 2A 3.3KΩF TD0804N
11R24	DRZ832291	RK73H 2A 1.5KΩF TD0804N
11R25	DRZ832481	RK73H 2A 9.1KΩF TD0804N
11R26, 11R27	DRZ833021	RK73H 2A 51ΩF TD0804N
11R31	DRZ833021	RK73H 2A 51ΩF TD0804N
11R32	DRZ832311	RK73H 2A 1.8KΩF TD0804N
11R33	DRZ832371	RK73H 2A 3.3KΩF TD0804N
11R34	DRZ832291	RK73H 2A 1.5KΩF TD0804N
11R35	DRZ832481	RK73H 2A 9.1KΩF TD0804N

TRIG SELECTOR [11]

CIRCUIT REFERENCE	IWATSU PART NO.	DESCRIPTION
11R36	DRZ833021	RK73H 2A 51ΩF TD0804N
11R37	DRZ832481	RK73H 2A 9.1KΩF TD0804N
11R38 to 11R41	DRZ833021	RK73H 2A 51ΩF TD0804N
11R42	DRZ832481	RK73H 2A 9.1KΩF TD0804N
11R43, 11R44	DRZ832011	RK73H 2A 100ΩF TD0804N
11R45 to 11R47	DRZ833061	RK73H 2A 75ΩF TD0804N
11R48	DRZ832091	RK73H 2A 220ΩF TD0804N
11R49, 11R50	DRZ833041	RK73H 2A 62ΩF TD0804N
11R51, 11R52	DRZ833441	RK73H 2A 10ΩF TD0804N
11R53	DRZ832711	RK73H 2A 82KΩF TD0804N
11R54, 11R55	DRZ833011	RK73H 2A 47ΩF TD0804N
11R56	DRZ832211	RK73H 2A 680ΩF TD0804N
11R57	DRZ832251	RK73H 2A 1.0KΩF TD0804N
11R58	DRZ833061	RK73H 2A 75ΩF TD0804N
11R59, 11R60	DRZ833021	RK73H 2A 51ΩF TD0804N
11R61	DRZ831501	MCR10 000E TD0804N
11R62 to 11R64	DRZ833021	RK73H 2A 51ΩF TD0804N
11R70 to 11R73	DRZ831501	MCR10 000E TD0804N
11R74	DRZ833441	RK73H 2A 10ΩF TD0804N
11R80 to 11R89	DRZ833031	RK73H 2A 56ΩF TD0804N
11R90 to 11R109	DRZ833551	RK73H 2A 33ΩF TD0804N

400MHZ OSC [12]

CIRCUIT REFERENCE	IWATSU PART NO.	DESCRIPTION
12C4	DCC810571	C2012F 1H 104Z A TD0804N
12C7, 12C8	DCC816521	C2012CH 1H 220J A TD84N
12C13	DCC816521	C2012CH 1H 220J A TD84N
12C17	DCC810571	C2012F 1H 104Z A TD0804N
12C19, 12C20	DCC810511	C2012F 1H 103Z A TD84N
12C21	DCC816381	C2012CH 1H 020C A TD84N
12C22	DCC815891	C2012CH 1H 150J A TD84N
12C23, 12C27	DCC810511	C2012F 1H 103Z A TD84N
12C31	DCC815841	C2012SL 1H 681J A TD84N
12C34	DCE219151	SME-CE04W 1A 471M TC04R
12C35	DCC819091	GRM42-6B 106K6.3PT TE0804N
12C40	DCC816421	C2012CH 1H 040C A TD84N
12C41	DCC810511	C2012F 1H 103Z A TD84N
12C50 to 12C56	DCC810571	C2012F 1H 104Z A TD0804N
12D1	DDD810401	HVU 202A3 TE0804R
12D2	DDD810241	1SS 272 TE0804R
12DL1	DZB999051	LDH33A152B TE1208B
12IC1	DIC483321	74HC595F/AF TE1612B
12IC2	DIC322921	MC 10H117M
12IC3	DIC322601	MC 10EL01
12IC4, 12IC5	DIC619271	TA 75S558F (TE85L) TE0804L
12L1	DCL811031	HK2125 18NJ-T TE0804N
12Q1	DTR215791	2SK 2287
12R2, 12R4	DRZ833021	RK73H 2A 51ΩF TD0804N
12R9, 12R10	DRZ832481	RK73H 2A 9.1KΩF TD0804N
12R11, 12R12	DRZ833021	RK73H 2A 51ΩF TD0804N
12R14	DRZ832481	RK73H 2A 9.1KΩF TD0804N
12R17, 12R18	DRZ833021	RK73H 2A 51ΩF TD0804N
12R19, 12R20	DRZ832171	RK73H 2A 470ΩF TD0804N
12R21	DRZ833481	RK73H 2A 15ΩF TD0804N
12R22	DRZ832731	RK73H 2A 100KΩF TD0804N
12R23	DRZ832441	RK73H 2A 6.2KΩF TD0804N
12R26	DRZ832491	RK73H 2A 10KΩF TD0804N
12R27	DRZ832531	RK73H 2A 15KΩF TD0804N
12R30	DRZ832251	RK73H 2A 1.0KΩF TD0804N
12R31	DRZ832481	RK73H 2A 9.1KΩF TD0804N
12R32	DRZ832341	RK73H 2A 2.4KΩF TD0804N
12R33	DRZ832321	RK73H 2A 2.0KΩF TD0804N
12R34	DRZ832491	RK73H 2A 10KΩF TD0804N
12R40, 12R41	DRZ833021	RK73H 2A 51ΩF TD0804N
12RA1, 12RA2	DFB810131	RAC16 4D 472J A TD0804M
12RA3, 12RA4	DFB810051	RAC16 4D 103J A TD0804M
12Z21	MHN001311	HEATSINK OSH-2425-SPL

TV SYNC SEP 13

CIRCUIT REFERENCE	IWATSU PART NO.	DESCRIPTION
13C2	DCC816541	C2012CH 1H 330J A TD84N
13C3	DCC820261	C2012F 1C 225Z A TE0804N
13C5	DCC810511	C2012F 1H 103Z A TD84N
13C17	DCC816601	C2012CH 1H 101J A TD84N
13C21	DCC819091	GRM42-6B 106K6.3PT TE0804N
13C22	DCC820021	C2012F 1C 105Z A TD84N
13C34, 13C43	DCC810571	C2012F 1H 104Z A TD0804N
13C44	DCF810121	ECHU 1C 104J TE0804N
13C50 to 13C53	DCC810571	C2012F 1H 104Z A TD0804N
13C54	DCC816801	C2012CH 1H 102J A TD84N
13C57 to 13C62	DCC810571	C2012F 1H 104Z A TD0804N
13C63	DCC816801	C2012CH 1H 102J A TD84N
13C64	DCC810571	C2012F 1H 104Z A TD0804N
13C65, 13C66	DCC816801	C2012CH 1H 102J A TD84N
13C67, 13C68	DCC810571	C2012F 1H 104Z A TD0804N
13D4	DDD810241	1SS 272 TE0804R
13IC1	DIC623501	□PC 1663G-E1 TE1208F
13IC2	DIC614411	□PC 812G2-E1 TE1208F
13IC3	DIC889161	TC 4W53F(TE12L) TE1208R
13IC4	DIC639041	□PC 311G2-E1 TE1208F
13IC5	DIC639031	NJM 2903M(TE3) TE1208L
13IC6, 13IC7	DIC889161	TC 4W53F(TE12L) TE1208R
13IC8	DIC699531	LM 1881M TE1208B
13IC9	DIC448531	MC 74HC153F/AF
13IC10	DIC483321	74HC595F/AF TE1612B
13Q1	DTR890551	DTC114EK/RN1402 TE0804L
13Q4	DTR870031	3SK 241 TE0804L
13Q5	DTR890841	IMX3 TE0804R
13R1	DRZ832251	RK73H 2A 1.0KΩF TD0804N
13R2	DRZ832731	RK73H 2A 100KΩF TD0804N
13R3	DRZ832091	RK73H 2A 220ΩF TD0804N
13R4	DRZ832811	RK73H 2A 220KΩF TD0804N
13R5	DRZ832751	RK73H 2A 120KΩF TD0804N
13R6	DRZ832731	RK73H 2A 100KΩF TD0804N
13R7	DRZ832571	RK73H 2A 22KΩF TD0804N
13R10	DRZ832391	RK73H 2A 3.9KΩF TD0804N
13R11, 13R12	DRZ832091	RK73H 2A 220ΩF TD0804N
13R13	DRZ832491	RK73H 2A 10KΩF TD0804N
13R14, 13R15	DRZ832251	RK73H 2A 1.0KΩF TD0804N
13R16	DRZ832731	RK73H 2A 100KΩF TD0804N
13R18	DRZ832491	RK73H 2A 10KΩF TD0804N
13R19	DRZ828761	RR1220P-204-D TD0804N
13R20	DRZ832501	RK73H 2A 11KΩF TD0804N
13R21	DRZ832731	RK73H 2A 100KΩF TD0804N
13R22, 13R24	DRZ832811	RK73H 2A 220KΩF TD0804N
13R25	DRZ832391	RK73H 2A 3.9KΩF TD0804N
13R30	DRZ832511	RK73H 2A 12KΩF TD0804N
13R31	DRZ832331	RK73H 2A 2.2KΩF TD0804N
13R32	DRZ832151	RK73H 2A 390ΩF TD0804N
13R34	DRZ832251	RK73H 2A 1.0KΩF TD0804N
13R35	DRZ832331	RK73H 2A 2.2KΩF TD0804N
13R36	DRZ832731	RK73H 2A 100KΩF TD0804N

TV SYNC SEP 13

CIRCUIT REFERENCE	IWATSU PART NO.	DESCRIPTION
13R37	DRZ832331	RK73H 2A 2.2KΩF TD0804N
13R38, 13R39	DRZ832411	RK73H 2A 4.7KΩF TD0804N
13R40	DRZ832331	RK73H 2A 2.2KΩF TD0804N
13R41	DRZ832951	RK73H 2A 820KΩF TD0804N
13R42	DRZ832891	RK73H 2A 470KΩF TD0804N
13R43	DRZ832191	RK73H 2A 560ΩF TD0804N
13R44	DRZ832931	RK73H 2A 680KΩF TD0804N
13R45, 13R46	DRZ832011	RK73H 2A 100ΩF TD0804N
13R47, 13R48	DRZ832371	RK73H 2A 3.3KΩF TD0804N
13R50	DRZ832511	RK73H 2A 12KΩF TD0804N

TIME BASE [14]

CIRCUIT REFERENCE	IWATSU PART NO.	DESCRIPTION
14C8	DCC810571	C2012F 1H 104Z A TD0804N
14C10, 14C21	DCC810511	C2012F 1H 103Z A TD84N
14C22, 14C28	DCC810511	C2012F 1H 103Z A TD84N
14C30, 14C31	DCC815841	C2012SL 1H 681J A TD84N
14C34, 14C35	DCC810941	C2012B 1H 682K A TD84N
14C36	DCC816601	C2012CH 1H 101J A TD84N
14C37, 14C38	DCC816801	C2012CH 1H 102J A TD84N
14C40	DCC810511	C2012F 1H 103Z A TD84N
14C41	DCC810571	C2012F 1H 104Z A TD0804N
14C42	DCC816421	C2012CH 1H 040C A TD84N
14C50	DCC820021	C2012F 1C 105Z A TD84N
14C61, 14C62	DCC810571	C2012F 1H 104Z A TD0804N
14C63	DCE219051	SME-CE04W 1A 101M TC04R
14C64 to 14C67	DCC810571	C2012F 1H 104Z A TD0804N
14C68, 14C69	DCE219051	SME-CE04W 1A 101M TC04R
14C70 to 14C75	DCC810571	C2012F 1H 104Z A TD0804N
14C76, 14C77	DCC810511	C2012F 1H 103Z A TD84N
14C78, 14C79	DCC810571	C2012F 1H 104Z A TD0804N
14C80	DCC820121	EMK325F 106ZH-T TE0804N
14C81	DCC810511	C2012F 1H 103Z A TD84N
14C83	DCC810571	C2012F 1H 104Z A TD0804N
14D1	DDD810241	1SS 272 TE0804R
14D2	DDD810261	HSM 88AS TL
14FL1, 14FL2	DCL870021	NFM41P11C204 TE1204N
14IC1	DIC891041	MTB411A TIMEBASE IC
14IC2	DIC891031	MCG426 CLOCK GENERATOR
14IC3	DHF060191	QCG571ABN-10.0000
14IC4	DIC322631	MC 10EL16D
14IC5	DHF060181	VC-5R0A30-2000 TE1608B
14IC6	DIC619271	TA 75S558F (TE85L) TE0804L
14IC7	DIC659791	TA 78L05F (TE12L) TE1208L
14IC8	DIC471841	PALCE16V8H-10JC/4 K0315ACQ
14L2, 14L4, 14L5	DCL811011	BLM21A121FPT TD0804N
14Q1	DTR890861	IMZ1 TE0804R
14Q2	DTR890851	IMH1 TE0804N
14R1, 14R2	DRZ833041	RK73H 2A 62ΩF TD0804N
14R3	DRZ833551	RK73H 2A 33ΩF TD0804N
14R4 to 14R7	DRZ833041	RK73H 2A 62ΩF TD0804N
14R8	DRZ832011	RK73H 2A 100ΩF TD0804N
14R10, 14R11	DRZ833021	RK73H 2A 51ΩF TD0804N
14R12 to 14R17	DRZ833041	RK73H 2A 62ΩF TD0804N
14R18	DRZ832311	RK73H 2A 1.8KΩF TD0804N
14R19	DRZ832371	RK73H 2A 3.3KΩF TD0804N
14R20	DRZ832331	RK73H 2A 2.2KΩF TD0804N
14R21	DRZ832311	RK73H 2A 1.8KΩF TD0804N
14R22	DRZ832331	RK73H 2A 2.2KΩF TD0804N
14R23	DRZ833041	RK73H 2A 62ΩF TD0804N
14R24 to 14R26	DRZ833021	RK73H 2A 51ΩF TD0804N
14R27	DRZ832731	RK73H 2A 100KΩF TD0804N
14R28, 14R29	DRZ833061	RK73H 2A 75ΩF TD0804N
14R30 to 14R33	DRZ832371	RK73H 2A 3.3KΩF TD0804N
14R34, 14R35	DRZ832491	RK73H 2A 10KΩF TD0804N
14R36	DRZ832251	RK73H 2A 1.0KΩF TD0804N

TIME BASE [14]

CIRCUIT REFERENCE	IWATSU PART NO.	DESCRIPTION
14R37 to 14R39	DRZ833021	RK73H 2A 51ΩF TD0804N
14R40	DRZ832211	RK73H 2A 680ΩF TD0804N
14R50, 14R51	DRZ833021	RK73H 2A 51ΩF TD0804N
14R53, 14R54	DRZ833551	RK73H 2A 33ΩF TD0804N
14R55	DRZ833021	RK73H 2A 51ΩF TD0804N
14R56	DRZ832011	RK73H 2A 100ΩF TD0804N
14R57	DRZ833041	RK73H 2A 62ΩF TD0804N
14R58, 14R59	DRZ832331	RK73H 2A 2.2KΩF TD0804N
14R60	DRZ832491	RK73H 2A 10KΩF TD0804N

T/D CNVT 15

CIRCUIT REFERENCE	IWATSU PART NO.	DESCRIPTION
15C1	DCC810511	C2012F 1H 103Z A TD84N
15C5	DCC810571	C2012F 1H 104Z A TD0804N
15C11	DCC816801	C2012CH 1H 102J A TD84N
15C14 to 15C16	DCC810571	C2012F 1H 104Z A TD0804N
15C21, 15C23	DCC810571	C2012F 1H 104Z A TD0804N
15C25	DCC810571	C2012F 1H 104Z A TD0804N
15C26	DCC820021	C2012F 1C 105Z A TD84N
15C27	DCC810511	C2012F 1H 103Z A TD84N
15C29	DCC810571	C2012F 1H 104Z A TD0804N
15C30, 15C31	DCC816801	C2012CH 1H 102J A TD84N
15C32, 15C33	DCC810571	C2012F 1H 104Z A TD0804N
15C34	DCC816801	C2012CH 1H 102J A TD84N
15C36	DCC810571	C2012F 1H 104Z A TD0804N
15C39	DCC816381	C2012CH 1H 020C A TD84N
15C41	DCC819091	GRM42-6B 106K6.3PT TE0804N
15C43	DCE219051	SME-CE04W 1A 101M TC04R
15C50	DCC810571	C2012F 1H 104Z A TD0804N
15C54	DCC816581	C2012CH 1H 680J A TD84N
15C55	DCC816511	C2012CH 1H 180J A TD84N
15C58	DCC816801	C2012CH 1H 102J A TD84N
15C60, 15C64	DCC810571	C2012F 1H 104Z A TD0804N
15C81, 15C83	DCE229201	SME-CE04W 1E 470M TC04R
15C84	DCC810571	C2012F 1H 104Z A TD0804N
15C85	DCE219051	SME-CE04W 1A 101M TC04R
15C86	DCC810571	C2012F 1H 104Z A TD0804N
15C87	DCE219051	SME-CE04W 1A 101M TC04R
15C88 to 15C91	DCC810571	C2012F 1H 104Z A TD0804N
15C92, 15C93	DCC820021	C2012F 1C 105Z A TD84N
15D1	DDD810261	HSM 88AS TL
15D2	DDD810461	HSM 124S-JTL TE0804L
15D3	DDD810261	HSM 88AS TL
15IC1	DIC614411	□PC 812G2-E1 TE1208F
15IC2	DIC614811	LT 1097S8-T2 TE1208B
15IC3	DIC639161	NJM 360M(TE3) TE1208L
15IC4	DIC659371	NJM 431U-TE1 (JRC)
15L1 to 15L4	DCL811011	BLM21A121FPT TD0804N
15Q1	DTR810041	2SA 1162Y TE85L
15Q2	DTR898711	XN 6435 TE0804R
15Q3 to 15Q5	DTR830071	2SC 3356-T1B
15Q6	DTR229091	2SJ 144-GR(TE85L) TE0804L
15Q7 to 15Q11	DTR830071	2SC 3356-T1B
15Q12, 15Q13	DTR860161	2SK 508 K51 TE0804L
15Q14	DTR830071	2SC 3356-T1B
15R1	DRZ832511	RK73H 2A 12KΩF TD0804N
15R2	DRZ832441	RK73H 2A 6.2KΩF TD0804N
15R3	DRZ832031	RK73H 2A 120ΩF TD0804N
15R4	DRZ832301	RK73H 2A 1.6KΩF TD0804N
15R5	DRZ832361	RK73H 2A 3.0KΩF TD0804N
15R6	DRZ832971	RK73H 2A 1.0MΩF TD0804N
15R10	DRZ820581	RN73F 2A 6.8KΩD TD0804N
15R11	DRZ820621	RN73F 2A 10KΩD TD0804N
15R12	DRZ820871	RN73F 2A 2.4KΩD TD0804N

T/D CNVT 15

CIRCUIT REFERENCE	IWATSU PART NO.	DESCRIPTION
15R13	DRZ832411	RK73H 2A 4.7KΩF TD0804N
15R14, 15R15	DRZ832491	RK73H 2A 10KΩF TD0804N
15R17	DRZ832251	RK73H 2A 1.0KΩF TD0804N
15R18	DRZ832381	RK73H 2A 3.6KΩF TD0804N
15R19	DRZ832461	RK73H 2A 7.5KΩF TD0804N
15R20	DRZ832411	RK73H 2A 4.7KΩF TD0804N
15R21	DRZ832251	RK73H 2A 1.0KΩF TD0804N
15R22, 15R23	DRZ833011	RK73H 2A 47ΩF TD0804N
15R24	DRZ832331	RK73H 2A 2.2KΩF TD0804N
15R25	DRZ832251	RK73H 2A 1.0KΩF TD0804N
15R26	DRZ832221	RK73H 2A 750ΩF TD0804N
15R27	DRZ832441	RK73H 2A 6.2KΩF TD0804N
15R28	DRZ832431	RK73H 2A 5.6KΩF TD0804N
15R29	DRZ832301	RK73H 2A 1.6KΩF TD0804N
15R30	DRZ833011	RK73H 2A 47ΩF TD0804N
15R31	DRZ832011	RK73H 2A 100ΩF TD0804N
15R32, 15R33	DRZ833011	RK73H 2A 47ΩF TD0804N
15R34	DRZ832011	RK73H 2A 100ΩF TD0804N
15R35, 15R36	DRZ832251	RK73H 2A 1.0KΩF TD0804N
15R37	DRZ832051	RK73H 2A 150ΩF TD0804N
15R38	DRZ833021	RK73H 2A 51ΩF TD0804N
15R39	DRZ832611	RK73H 2A 33KΩF TD0804N
15R40	DRZ832051	RK73H 2A 150ΩF TD0804N
15R41	DRZ832161	RK73H 2A 430ΩF TD0804N
15R42	DRZ820011	RN73G 2A 30ΩD TD0804N
15R43	DRZ833571	RK73H 2A 39ΩF TD0804N
15R44	DRZ833011	RK73H 2A 47ΩF TD0804N
15R50, 15R51	DRZ833021	RK73H 2A 51ΩF TD0804N
15R54, 15R55	DRZ833011	RK73H 2A 47ΩF TD0804N
15R56	DRZ833511	RK73H 2A 22ΩF TD0804N
15R57	DRZ832011	RK73H 2A 100ΩF TD0804N
15R58	DRZ820541	RN73F 2A 4.7KΩD TD0804N
15R59	DRZ832011	RK73H 2A 100ΩF TD0804N
15R60, 15R61	DRZ833011	RK73H 2A 47ΩF TD0804N
15R62	DRZ832391	RK73H 2A 3.9KΩF TD0804N
15R63, 15R64	DRZ820161	RN73F 2A 120ΩD TD0804N
15R65	DRZ832011	RK73H 2A 100ΩF TD0804N
15R66	DRZ832171	RK73H 2A 470ΩF TD0804N
15R67	DRZ832141	RK73H 2A 360ΩF TD0804N
15R70, 15R71	DRZ833551	RK73H 2A 33ΩF TD0804N
15R72	DRZ833011	RK73H 2A 47ΩF TD0804N
15R73	DRZ832471	RK73H 2A 8.2KΩF TD0804N
15R74	DRZ832491	RK73H 2A 10KΩF TD0804N
15R80, 15R81	DRZ828721	RR1220P-224-B TD0804N
15R82	DRZ828731	RR1220P-244-B TD0804N

CAL SIGNAL 16

CIRCUIT REFERENCE	IWATSU PART NO.	DESCRIPTION
16C3, 16C5	DCC810511	C2012F 1H 103Z A TD84N
16C7, 16C10	DCC810511	C2012F 1H 103Z A TD84N
16C12	DCC819091	GRM42-6B 106K6.3PT TE0804N
16C15	DCC816521	C2012CH 1H 220J A TD84N
16C60 to 16C69	DCC810571	C2012F 1H 104Z A TD0804N
16C70 to 16C73	DCC816801	C2012CH 1H 102J A TD84N
16C74	DCC816601	C2012CH 1H 101J A TD84N
16C75 to 16C77	DCC816801	C2012CH 1H 102J A TD84N
16C80 to 16C83	DCC820121	EMK325F 106ZH-T TE0804N
16D1, 16D2	DDD810241	1SS 272 TE0804R
16IC1	DIC483031	74HC4051F TE1612B
16IC2	DIC614811	LT 1097S8-T2 TE1208B
16IC3	DIC619271	TA 75S558F (TE85L) TE0804L
16IC4	DIC499441	74HC4053F/AF TE1612B
16IC5	DIC448531	MC 74HC153F/AF
16IC6	DIC483321	74HC595F/AF TE1612B
16J2	KHB095411	SMALL PIN JACK
16L1 to 16L4	DCL811011	BLM21A121FPT TD0804N
16R1	DRZ828541	RN73F 2A 18KΩB TD0804N
16R2	DRZ828551	RN73F 2A 2KΩB TD0804N
16R3, 16R4	DRZ832311	RK73H 2A 1.8KΩF TD0804N
16R5	DRZ832321	RK73H 2A 2.0KΩF TD0804N
16R6	DRZ828581	RN73F 2A 560ΩB TD0804N
16R7	DRZ833511	RK73H 2A 22ΩF TD0804N
16R10	DRZ832491	RK73H 2A 10KΩF TD0804N
16R11	DRZ832351	RK73H 2A 2.7KΩF TD0804N
16R12	DRZ832331	RK73H 2A 2.2KΩF TD0804N
16R16 to 16R19	DRZ833061	RK73H 2A 75ΩF TD0804N
16R20 to 16R24	DRZ832071	RK73H 2A 180ΩF TD0804N
16R25	DRZ832031	RK73H 2A 120ΩF TD0804N

DC GENE 1/2 17

CIRCUIT REFERENCE	IWATSU PART NO.	DESCRIPTION
17C10, 17C12, 17C13	DCC810511	C2012F 1H 103Z A TD84N
17C16	DCC816601	C2012CH 1H 101J A TD84N
17C19, 17C22	DCC816641	C2012CH 1H 221J A TD84N
17C30	DCC810511	C2012F 1H 103Z A TD84N
17C33	DCC810571	C2012F 1H 104Z A TD0804N
17C35 to 17C39	DCC810571	C2012F 1H 104Z A TD0804N
17C50	DCC820021	C2012F 1C 105Z A TD84N
17C52 to 17C54	DCC820021	C2012F 1C 105Z A TD84N
17C55	DCC810571	C2012F 1H 104Z A TD0804N
17C56 to 17C60	DCC810571	C2012F 1H 104Z A TD0804N
17C61	DCC820021	C2012F 1C 105Z A TD84N
17C62	DCC810571	C2012F 1H 104Z A TD0804N
17C63	DCC820021	C2012F 1C 105Z A TD84N
17C64	DCC810571	C2012F 1H 104Z A TD0804N
17C65	DCC820021	C2012F 1C 105Z A TD84N
17C71, 17C73	DCE929471	SXE 16VB-220 TC04R
17IC1	DIC528501	□PD 78081GB-A67-3BS-MTX
17IC2	DIC645151	DAC 712UK
17IC3, 17IC4	DIC483031	74HC4051F TE1612B
17IC5	DIC619271	TA 75S558F (TE85L) TE0804L
17IC6	DIC639041	□PC 311G2-E1 TE1208F
17IC7	DIC614411	□PC 812G2-E1 TE1208F
17IC8	DIC499381	74HC138F/AF TE1612B
17IC9	DIC889101	TC 7SU04F TE0804L
17L1 to 17L3	DCL811011	BLM21A121FPT TD0804N
17Q1	DTR838661	2SC 2712LG TE85L
17R10	DRZ832101	RK73H 2A 240ΩF TD0804N
17R11	DRZ832081	RK73H 2A 200ΩF TD0804N
17R12	DRZ832501	RK73H 2A 11KΩF TD0804N
17R13	DRZ832461	RK73H 2A 7.5KΩF TD0804N
17R14	DRZ828561	RN73F 2A 3KΩB TD0804N
17R15	DRZ832241	RK73H 2A 910ΩF TD0804N
17R16	DRZ828531	RN73F 2A 1.2KΩB TD0804N
17R17, 17R18	DRZ832131	RK73H 2A 330ΩF TD0804N
17R19	DRZ832971	RK73H 2A 1.0MΩF TD0804N
17R21	DRZ832101	RK73H 2A 240ΩF TD0804N
17R22	DRZ832131	RK73H 2A 330ΩF TD0804N
17R23 to 17R25	DRZ832251	RK73H 2A 1.0KΩF TD0804N
17R26	DRZ832131	RK73H 2A 330ΩF TD0804N
17R30 to 17R34	DRZ832581	RK73H 2A 24KΩF TD0804N
17R35 to 17R39	DRZ832511	RK73H 2A 12KΩF TD0804N
17R40	DRZ831501	MCR10 000E TD0804N

DC GENE 2/2 [18]

CIRCUIT REFERENCE	IWATSU PART NO.	DESCRIPTION
18C1	DCF810121	ECHU 1C 104J TE0804N
18C2 to 18C7	DCC811111	C2012B 1E 104K A TD84N
18C8	DCF810121	ECHU 1C 104J TE0804N
18C9 to 18C11	DCC811111	C2012B 1E 104K A TD84N
18C12, 18C13	DCF810121	ECHU 1C 104J TE0804N
18C14 to 18C19	DCC811111	C2012B 1E 104K A TD84N
18C20	DCC810571	C2012F 1H 104Z A TD0804N
18C21	DCF810121	ECHU 1C 104J TE0804N
18C22	DCC811111	C2012B 1E 104K A TD84N
18C23, 18C24	DCC810571	C2012F 1H 104Z A TD0804N
18C50 to 18C53	DCC810571	C2012F 1H 104Z A TD0804N
18C55, 18C56	DCC810571	C2012F 1H 104Z A TD0804N
18C60 to 18C71	DCC810571	C2012F 1H 104Z A TD0804N
18IC1 to 18IC3	DIC483021	TC 4051BF (EL) TE1612B
18IC10 to 18IC13	DIC614761	TL 084CNS
18IC14	DIC614411	□PC 812G2-E1 TE1208F
18IC16	DIC614761	TL 084CNS
18R1, 18R8	DRZ832071	RK73H 2A 180ΩF TD0804N
18R12, 18R13	DRZ832071	RK73H 2A 180ΩF TD0804N
18R19, 18R21	DRZ832071	RK73H 2A 180ΩF TD0804N
18R31	DRZ832011	RK73H 2A 100ΩF TD0804N
18RA1 to 18RA5	DFB810111	RAC16 4D 101J A TD0804M

MAIN CONT 1/2 [19]

CIRCUIT REFERENCE	IWATSU PART NO.	DESCRIPTION
19C10	DCC816641	C2012CH 1H 221J A TD84N
19C51 to 19C53	DCC810571	C2012F 1H 104Z A TD0804N
19C54	DCC820031	C2012F 1C 224Z A TD84N
19C55 to 19C59	DCC810571	C2012F 1H 104Z A TD0804N
19C60	DCC820031	C2012F 1C 224Z A TD84N
19C61, 19C62	DCC820021	C2012F 1C 105Z A TD84N
19C63	DCC820031	C2012F 1C 224Z A TD84N
19C64	DCC810571	C2012F 1H 104Z A TD0804N
19IC1	DIC471852	PALCE16V8H-10JC/4 K0327MBC
19IC2	DIC471881	PALCE16V8H-7JC/5 K0319HCS
19IC3	DIC471891	PALCE16V8H-7JC/5 K0320HMR
19IC4	DIC484011	74VHC138F EL TE1612B
19IC5	DIC449631	MC 74HC574F/AF
19IC6	DIC471871	PALCE16V8H-10JC/4 K0318MST
19IC7	DIC471861	PALCE16V8H-10JC/4 K0317MCG
19IC8	DIC645141	PCF 8584T TE2412B
19IC9	DIC483031	74HC4051F TE1612B
19IC10	DIC484491	74VHCT541AF EL TE2412B
19IC11	DIC471631	74VHCT573AF
19IC12	DIC484531	74VHC32F EL TE1612B
19IC13	DIC495111	74HCT245AF TE2412B
19IC14	DIC471901	PALCE16V8H-7JC/5 K0321HMS
19R1	DRZ831501	MCR10 000E TD0804N
19R2	DRZ832331	RK73H 2A 2.2KΩF TD0804N
19R3	DRZ832251	RK73H 2A 1.0KΩF TD0804N
19R4	DRZ832331	RK73H 2A 2.2KΩF TD0804N
19R5, 19R6	DRZ832251	RK73H 2A 1.0KΩF TD0804N
19R7	DRZ832011	RK73H 2A 100ΩF TD0804N
19R8	DRZ832251	RK73H 2A 1.0KΩF TD0804N
19R9	DRZ832331	RK73H 2A 2.2KΩF TD0804N
19R10	DRZ832131	RK73H 2A 330ΩF TD0804N
19R21, 19R22	DRZ832101	RK73H 2A 240ΩF TD0804N
19R24, 19R25	DRZ832101	RK73H 2A 240ΩF TD0804N
19R26, 19R27	DRZ832251	RK73H 2A 1.0KΩF TD0804N
19RA2, 19RA4	DFB810041	RAC16 4D 220J A TD0804M
19RA6	DFB810041	RAC16 4D 220J A TD0804M
19RA8	DFB810081	RAC16 4D 102J A TD0804M
19RA12	DFB810111	RAC16 4D 101J A TD0804M
19RA16	DFB810041	RAC16 4D 220J A TD0804M
19RA18	DFB810121	RAC16 4D 470J A TD0804M
19RA19, 19RA20	DFB810041	RAC16 4D 220J A TD0804M

MAIN CONT 2/2 [20]

CIRCUIT REFERENCE	IWATSU PART NO.	DESCRIPTION
20C3	DCC810511	C2012F 1H 103Z A TD84N
20C4, 20C5	DCC810571	C2012F 1H 104Z A TD0804N
20C6	DCE219051	SME-CE04W 1A 101M TC04R
20C31	DCC810511	C2012F 1H 103Z A TD84N
20C51 to 20C64	DCC810571	C2012F 1H 104Z A TD0804N
20C70, 20C71	DCC810571	C2012F 1H 104Z A TD0804N
20C80	DCC816801	C2012CH 1H 102J A TD84N
20IC1	DIC449631	MC 74HC574F/AF
20IC2 to 20IC6	DIC499381	74HC138F/AF TE1612B
20IC7	DIC499321	74HC04F/AF TE1612B
20IC8	DIC529201	AT93C86-10SC JEDEC TE1208B
20IC9	DIC470461	DS 1620S TE1612B
20IC10	DIC889161	TC 4W53F(TE12L) TE1208R
20IC11, 20IC12	DIC642201	MB88346BPF-G-BND-EF TE2412F
20IC13	DIC659371	NJM 431U-TE1 (JRC)
20IC14	DIC449631	MC 74HC574F/AF
20IC15	DIC619271	TA 75S558F (TE85L) TE0804L
20IC16	DIC889131	TC 7W32F(TE12L) TE1208R
20J1, 20J2	DCN129381	52808-2691 TE4412B
20J3, 20J4	DCN129391	52808-2291 TE4412B
20R3	DRZ832011	RK73H 2A 100ΩF TD0804N
20R4	DRZ832291	RK73H 2A 1.5KΩF TD0804N
20R5	DRZ820441	RN73F 2A 1.8KΩD TD0804N
20R6	DRZ820491	RN73F 2A 3KΩD TD0804N
20R7, 20R8	DRZ833011	RK73H 2A 47ΩF TD0804N
20R10 to 20R13	DRZ832331	RK73H 2A 2.2KΩF TD0804N
20R14	DRZ832011	RK73H 2A 100ΩF TD0804N
20R15, 20R16	DRZ832331	RK73H 2A 2.2KΩF TD0804N
20R17 to 20R19	DRZ832011	RK73H 2A 100ΩF TD0804N
20R22	DRZ832291	RK73H 2A 1.5KΩF TD0804N
20R24	DRZ832011	RK73H 2A 100ΩF TD0804N
20R30	DRZ820621	RN73F 2A 10KΩD TD0804N
20R31	DRZ820661	RN73F 2A 15KΩD TD0804N
20R32	DRZ832441	RK73H 2A 6.2KΩF TD0804N
20R33	DRZ832221	RK73H 2A 750ΩF TD0804N
20R34, 20R35	DRZ832491	RK73H 2A 10KΩF TD0804N
20R36, 20R37	DRZ832011	RK73H 2A 100ΩF TD0804N
20RA4 to 20RA8	DFB810111	RAC16 4D 101J A TD0804M
20RA10	DFB810111	RAC16 4D 101J A TD0804M

POWER CONNECTOR [21]

CIRCUIT REFERENCE	IWATSU PART NO.	DESCRIPTION
21C1 to 21C4	DCC810511	C2012F 1H 103Z A TD84N
21C10	DCE229221	SME-CE04W 1E 221M TC04R
21C11	DCC820031	C2012F 1C 224Z A TD84N
21C12	DCE229201	SME-CE04W 1E 470M TC04R
21C13	DCC820031	C2012F 1C 224Z A TD84N
21C18	DCE229201	SME-CE04W 1E 470M TC04R
21C19	DCC820031	C2012F 1C 224Z A TD84N
21C20	DCE219151	SME-CE04W 1A 471M TC04R
21C21	DCC820021	C2012F 1C 105Z A TD84N
21C30	DCE219051	SME-CE04W 1A 101M TC04R
21C31	DCC820031	C2012F 1C 224Z A TD84N
21C40	DCE219151	SME-CE04W 1A 471M TC04R
21C41	DCC820021	C2012F 1C 105Z A TD84N
21C50	DCE219051	SME-CE04W 1A 101M TC04R
21C51	DCC820031	C2012F 1C 224Z A TD84N
21C52	DCC810511	C2012F 1H 103Z A TD84N
21C60	DCE229221	SME-CE04W 1E 221M TC04R
21C61	DCC820031	C2012F 1C 224Z A TD84N
21C62	DCE229201	SME-CE04W 1E 470M TC04R
21C63	DCC820031	C2012F 1C 224Z A TD84N
21C68	DCE229201	SME-CE04W 1E 470M TC04R
21C69	DCC820031	C2012F 1C 224Z A TD84N
21C70	DCE219151	SME-CE04W 1A 471M TC04R
21C71	DCC820021	C2012F 1C 105Z A TD84N
21C80	DCE219051	SME-CE04W 1A 101M TC04R
21C81	DCC820031	C2012F 1C 224Z A TD84N
21C90	DCE219151	SME-CE04W 1A 471M TC04R
21C91	DCC820021	C2012F 1C 105Z A TD84N
21C100	DCE219051	SME-CE04W 1A 101M TC04R
21C101	DCC820031	C2012F 1C 224Z A TD84N
21C102, 21C103	DCC810511	C2012F 1H 103Z A TD84N
21C110 to 21C112	DCC810511	C2012F 1H 103Z A TD84N
21J1	DCN126021	CONNECTOR 53258-0610
21J2	DCN126081	CONNECTOR 53258-0710
21J3	DCN990911	CONNECTOR 5267-07A
21L10, 21L11	DCL119361	BL02RN2-R62 TD04N
21L14, 21L20	DCL119361	BL02RN2-R62 TD04N
21L25, 21L40	DCL119361	BL02RN2-R62 TD04N
21L41, 21L46	DCL119361	BL02RN2-R62 TD04N
21L60, 21L61	DCL119361	BL02RN2-R62 TD04N
21L64, 21L70	DCL119361	BL02RN2-R62 TD04N
21L75, 21L90	DCL119361	BL02RN2-R62 TD04N
21L91, 21L96	DCL119361	BL02RN2-R62 TD04N
21SW1	DSW017001	SPUP19

CPU 31

CIRCUIT REFERENCE	IWATSU PART NO.	DESCRIPTION
31C1 to 31C3	DCC810571	C2012F 1H 104Z A TD0804N
31C4, 31C5	DCE219051	SME-CE04W 1A 101M TC04R
31C6, 31C76	DCC810571	C2012F 1H 104Z A TD0804N
31C149 to 31C151	DCC810571	C2012F 1H 104Z A TD0804N
31C187	DCC820021	C2012F 1C 105Z A TD84N
31IC1	DIC560411	XPC 603PFE166LC
31IC2	DIC484991	MC 88916DW80R2 TE2412B
31IC3	DHF060141	FXO-31FH 16.000MHZ TE1608B
31IC4	DIC699231	M51957BFP TE1208F
31IC6	DIC471621	74VHCT04AF
31IC77 to 31IC79	DIC484491	74VHCT541AF EL TE2412B
31L12	DCL119361	BL02RN2-R62 TD04N
31R2, 31R3	DRZ833011	RK73H 2A 47ΩF TD0804N
31R4	DRZ832131	RK73H 2A 330ΩF TD0804N
31R5	DRZ832971	RK73H 2A 1.0MΩF TD0804N
31R7 to 31R9	DRZ832011	RK73H 2A 100ΩF TD0804N
31R12	DRZ832011	RK73H 2A 100ΩF TD0804N
31R14	DRZ833441	RK73H 2A 10ΩF TD0804N
31R15	DRZ832251	RK73H 2A 1.0KΩF TD0804N
31R17	DRZ832491	RK73H 2A 10KΩF TD0804N
31R18	DRZ832391	RK73H 2A 3.9KΩF TD0804N
31R95	DRZ831501	MCR10 000E TD0804N
31RA1 to 31RA5	DFB810051	RAC16 4D 103J A TD0804M
31RA6, 31RA7	DFB810081	RAC16 4D 102J A TD0804M
31RA8 to 31RA24	DFB810051	RAC16 4D 103J A TD0804M
31RA25	DFB810081	RAC16 4D 102J A TD0804M

DRAM 32

CIRCUIT REFERENCE	IWATSU PART NO.	DESCRIPTION
32IC7, 32IC8	DCN997011	SIMM 52706-7220
32IC9 to 32IC11	DIC199381	74F157AF
32IC13	DIC471641	EPM7032STC44-10 (K0323DRM)
32IC14	DIC471831	PALCE16V8H-10JC/4 K0314CAS
32IC84	DIC483711	74HC374F/AF TE2412B
32P2	DCN125971	CONNECTOR A1-10PA-2.54DSA
32Q8	DTR890521	DTC143TK/RN1410 TE0804L
32R19	DRZ832411	RK73H 2A 4.7KΩF TD0804N
32R20	DRZ832341	RK73H 2A 2.4KΩF TD0804N
32R85	DRZ832491	RK73H 2A 10KΩF TD0804N
32R96, 32R97	DRZ832091	RK73H 2A 220ΩF TD0804N
32R100, 32R191	DRZ832091	RK73H 2A 220ΩF TD0804N
32R129 to 32R134	DRZ832131	RK73H 2A 330ΩF TD0804N
32RA26 to 32RA28	DFB810041	RAC16 4D 220J A TD0804M
32RA29, 32RA99	DFB810051	RAC16 4D 103J A TD0804M

BUS CONTROL 33

CIRCUIT REFERENCE	IWATSU PART NO.	DESCRIPTION
33IC15	DIC560361	MC 68150FN33
33IC16	DIC556321	□PD 71071GC-3B6 (NEC)
33IC17	DIC471781	PALCE16V8H-10JC/4 K0309D32
33IC18	DIC471931	PALCE16V8H-10JC/4 K0322ABT
33IC19	DIC471761	PALCE16V8H-10JC/4 K0307A32
33IC20	DIC484481	74VHCT373F EL TE2412B
33IC21	DIC471772	PALCE16V8H-10JC/4 K0329A9
33IC22	DIC472013	PALCE16V8H-10JC/4 K0328D8
33IC23, 33IC24	DIC484011	74VHC138F EL TE1612B
33IC25	DIC483091	74HC393F/AF TE1612B
33IC53	DIC199301	74F74F
33IC75	DIC484011	74VHC138F EL TE1612B
33IC76	DIC471811	PALCE16V8H-10JC/4 K0312IRW
33R21	DRZ832491	RK73H 2A 10KΩF TD0804N
33R64	DRZ832251	RK73H 2A 1.0KΩF TD0804N
33R67	DRZ832491	RK73H 2A 10KΩF TD0804N
33R104, 33R105	DRZ832091	RK73H 2A 220ΩF TD0804N
33R107, 33R108	DRZ832091	RK73H 2A 220ΩF TD0804N
33R110, 33R111	DRZ832091	RK73H 2A 220ΩF TD0804N
33R113, 33R114	DRZ832091	RK73H 2A 220ΩF TD0804N
33RA30, 33RA31	DFB810051	RAC16 4D 103J A TD0804M
33RA33, 33RA34	DFB810051	RAC16 4D 103J A TD0804M
33RA88, 33RA89	DFB810051	RAC16 4D 103J A TD0804M
33RA91	DFB810051	RAC16 4D 103J A TD0804M

VGA CONTROL 34

CIRCUIT REFERENCE	IWATSU PART NO.	DESCRIPTION
34C8 to 34C10	DCC816641	C2012CH 1H 221J A TD84N
34C11	DCE219051	SME-CE04W 1A 101M TC04R
34C12	DCC810571	C2012F 1H 104Z A TD0804N
34C13	DCE219051	SME-CE04W 1A 101M TC04R
34C14	DCC810571	C2012F 1H 104Z A TD0804N
34C15	DCE219051	SME-CE04W 1A 101M TC04R
34C16	DCC810571	C2012F 1H 104Z A TD0804N
34C17, 34C18	DCC816801	C2012CH 1H 102J A TD84N
34C144	DCC820021	C2012F 1C 105Z A TD84N
34C145	DCE219051	SME-CE04W 1A 101M TC04R
34C146 to 34C148	DCC820021	C2012F 1C 105Z A TD84N
34C152	DCC810571	C2012F 1H 104Z A TD0804N
34C160	DCC820021	C2012F 1C 105Z A TD84N
34C162	DCC810511	C2012F 1H 103Z A TD84N
34C166	DCE916011	LXV 10VB-1000M J20MC
34C167	DCE949181	SRA 50VB-3.3 TC04R
34IC27, 34IC28	DIC518551	DRAM 1MX16(M70)F TE4416B
34IC29	DIC471751	F65545B2-5
34IC86	DIC699231	M51957BFP TE1208F
34J1	DCN129501	52808-3091 TE5612B
34L1 to 34L5	DCL810711	BLM31A260SPT TE0804N
34L6	DCL119361	BL02RN2-R62 TD04N
34P4	DCN026621	CONNECTOR 17HE-R13150-73HC1
34P5	DCN994241	CONNECTOR 5267-05A
34Q2	DTR890521	DTC143TK/RN1410 TE0804L
34Q10	DTR215791	2SK 2287
34Q11	DTR890521	DTC143TK/RN1410 TE0804L
34R22 to 34R24	DRZ832251	RK73H 2A 1.0KΩF TD0804N
34R25 to 34R27	DRZ832051	RK73H 2A 150ΩF TD0804N
34R29	DRZ832111	RK73H 2A 270ΩF TD0804N
34R30, 34R31	DRZ833441	RK73H 2A 10ΩF TD0804N
34R68, 34R71	DRZ831501	MCR10 000E TD0804N
34R116, 34R117	DRZ832251	RK73H 2A 1.0KΩF TD0804N
34R118, 34R119	DRZ832091	RK73H 2A 220ΩF TD0804N
34R122, 34R123	DRZ832091	RK73H 2A 220ΩF TD0804N
34R126	DRZ833011	RK73H 2A 47ΩF TD0804N
34R128	DRZ833551	RK73H 2A 33ΩF TD0804N
34R144	DRZ832491	RK73H 2A 10KΩF TD0804N
34R149	DRZ831501	MCR10 000E TD0804N
34R150, 34R151	DRZ832011	RK73H 2A 100ΩF TD0804N
34R152	DRZ832491	RK73H 2A 10KΩF TD0804N
34R153	DRZ832391	RK73H 2A 3.9KΩF TD0804N
34R155, 34R156	DRZ832111	RK73H 2A 270ΩF TD0804N

32BIT I/O [35]

CIRCUIT REFERENCE	IWATSU PART NO.	DESCRIPTION
35C19 to 35C22	DCC816761	C2012CH 1H 471J A TD84N
35C23, 35C24	DCC816491	C2012CH 1H 100D A TD84N
35C25	DCC816761	C2012CH 1H 471J A TD84N
35C26 to 35C29	DCE949081	SRA 50VB-1 TC04R
35C168, 35C169	DCC810511	C2012F 1H 103Z A TD84N
35C170 to 35C186	DCC816521	C2012CH 1H 220J A TD84N
35IC31	DIC484981	DS 14C232CM TE1608B
35IC32	DIC560341	PC 87312VF
35J2	DCN129381	52808-2691 TE4412B
35L13 to 35L33	DCL811011	BLM21A121FPT TD0804N
35P6	DCN126051	CONNECTOR 17LE-23090-27(D4CH)
35P7	DCN126041	CONNECTOR 17LE-13250-27(D4CH)
35R34, 35R35	DRZ832491	RK73H 2A 10KΩF TD0804N
35R37, 35R44	DRZ832491	RK73H 2A 10KΩF TD0804N
35R45	DRZ832391	RK73H 2A 3.9KΩF TD0804N
35R139	DRZ832491	RK73H 2A 10KΩF TD0804N
35RA35 to 35RA38	DFB810051	RAC16 4D 103J A TD0804M
35X1	DHF060131	CP12A 24MHZ TE2412M

MAIN BOARD I/F [36]

CIRCUIT REFERENCE	IWATSU PART NO.	DESCRIPTION
36C30, 36C31	DCC810571	C2012F 1H 104Z A TD0804N
36C34	DCE219051	SME-CE04W 1A 101M TC04R
36C35 to 36C38	DCC810571	C2012F 1H 104Z A TD0804N
36C39	DCE916011	LXV 10VB-1000M J20MC
36C40 to 36C43	DCC820021	C2012F 1C 105Z A TD84N
36C44 to 36C58	DCC810571	C2012F 1H 104Z A TD0804N
36C60 to 36C66	DCC810571	C2012F 1H 104Z A TD0804N
36C70	DCE229221	SME-CE04W 1E 221M TC04R
36C71, 36C72	DCC810571	C2012F 1H 104Z A TD0804N
36C74	DCE229221	SME-CE04W 1E 221M TC04R
36C77 to 36C80	DCC810571	C2012F 1H 104Z A TD0804N
36C81 to 36C84	DCC820021	C2012F 1C 105Z A TD84N
36C85 to 36C120	DCC810511	C2012F 1H 103Z A TD84N
36C124 to 36C132	DCC810571	C2012F 1H 104Z A TD0804N
36C153	DCE219051	SME-CE04W 1A 101M TC04R
36C154 to 36C157	DCC820021	C2012F 1C 105Z A TD84N
36C159	DCC810571	C2012F 1H 104Z A TD0804N
36C163, 36C164	DCC820021	C2012F 1C 105Z A TD84N
36IC34 to 36IC36	DIC484691	TC 74VHCT244AF (EL) TE2412B
36IC37 to 36IC40	DIC484681	TC 74VHCT245AF (EL) TE2412B
36IC41	DIC619101	NJM 4558M(TE3) TE1208L
36J3	DCN125031	52793-2690 TE4412B
36J4	DCN125021	52793-2290 TE4412B
36J5	DCN125031	52793-2690 TE4412B
36J8	DCN125021	52793-2290 TE4412B
36L7, 36L8	DCL119361	BL02RN2-R62 TD04N
36L11	DCL119361	BL02RN2-R62 TD04N
36P11	DCN126111	CONNECTOR 53259-0510
36Q7, 36Q9	DTR215791	2SK 2287
36R46	DRZ832411	RK73H 2A 4.7KΩF TD0804N
36R47	DRZ832301	RK73H 2A 1.6KΩF TD0804N
36R48	DRZ832491	RK73H 2A 10KΩF TD0804N
36R49	DRZ832341	RK73H 2A 2.4KΩF TD0804N
36R127	DRZ831501	MCR10 000E TD0804N
36R135, 36R136	DRZ832411	RK73H 2A 4.7KΩF TD0804N
36R137	DRZ832491	RK73H 2A 10KΩF TD0804N
36R138	DRZ832341	RK73H 2A 2.4KΩF TD0804N
36RA80 to 36RA87	DFB810051	RAC16 4D 103J A TD0804M
36RA92 to 36RA97	DFB810121	RAC16 4D 470J A TD0804M

8BIT I/O 37

CIRCUIT REFERENCE	IWATSU PART NO.	DESCRIPTION
37BT1	DES011201	CR2354-1HF
37C67, 37C68	DCC810571	C2012F 1H 104Z A TD0804N
37IC42	DIC557111	□PD 71059GB-10-3B4 (NEC)
37IC43	DIC471911	DS 1689S
37IC44	DIC519381	SRAM 128KX8(70)LLF TE3216B
37IC45, 37IC46	DIC528491	MBM 29F800BA-90PF
37IC47	DIC483711	74HC374F/AF TE2412B
37IC48, 37IC49	DIC484491	74VHCT541AF EL TE2412B
37IC50	DIC484691	TC 74VHCT244AF (EL) TE2412B
37IC51	DIC484681	TC 74VHCT245AF (EL) TE2412B
37IC52	DIC499921	74HC175F/AF TE1612B
37IC82	DIC471621	74VHCT04AF
37J6	DCN129391	52808-2291 TE4412B
37Q5, 37Q6	DTR890521	DTC143TK/RN1410 TE0804L
37R50, 37R51	DRZ832251	RK73H 2A 1.0KΩF TD0804N
37R65	DRZ832491	RK73H 2A 10KΩF TD0804N
37R94	DRZ832411	RK73H 2A 4.7KΩF TD0804N
37R154	DRZ832491	RK73H 2A 10KΩF TD0804N
37RA39, 37RA40	DFB810051	RAC16 4D 103J A TD0804M
37RA70, 37RA71	DFB810051	RAC16 4D 103J A TD0804M
37X2	DHF012081	MX-38T 32.768KHZ(15PPM)

EXTERNAL I/F 38

CIRCUIT REFERENCE	IWATSU PART NO.	DESCRIPTION
38C75	DCC816601	C2012CH 1H 101J A TD84N
38IC54	DIC196181	SN 75160AN/BN
38IC55	DIC196191	SN 75161AN/BN
38IC56, 38IC57	DIC484691	TC 74VHCT244AF (EL) TE2412B
38IC58	DIC557841	NAT 7210APD
38IC60	DIC483171	74HC20F/AF TE1612B
38IC61	DIC499921	74HC175F/AF TE1612B
38IC62	DIC483711	74HC374F/AF TE2412B
38IC63	DIC484681	TC 74VHCT245AF (EL) TE2412B
38IC64	DIC484491	74VHCT541AF EL TE2412B
38J7	DCN129381	52808-2691 TE4412B
38P9	DCN026611	CONNECTOR 57LE-20240-7700D35-19
38P10	DCN126031	CONNECTOR HU5-400PNA-S53T
38R54	DRZ832491	RK73H 2A 10KΩF TD0804N
38R55	DRZ832011	RK73H 2A 100Ω F TD0804N
38R57	DRZ832251	RK73H 2A 1.0KΩF TD0804N
38R81	DRZ833011	RK73H 2A 47Ω F TD0804N
38RA42	DFB810051	RAC16 4D 103J A TD0804M
38RA72 to 38RA75	DFB810051	RAC16 4D 103J A TD0804M
38RA76	DFB810081	RAC16 4D 102J A TD0804M
38RA77 to 38RA79	DFB810051	RAC16 4D 103J A TD0804M

PCMCIA [39]

CIRCUIT REFERENCE	IWATSU PART NO.	DESCRIPTION
39C69	DCE219051	SME-CE04W 1A 101M TC04R
39CN1	DCN126121	PCT-ST1-R-TF(KFA391429-A)
39IC65	DIC499921	74HC175F/AF TE1612B
39IC66	DIC499771	74HC540F TE2412B
39IC67 to 39IC69	DIC484491	74VHCT541AF-EL TE2412B
39IC70	DIC484481	74VHCT373F EL TE2412B
39IC71	DIC471821	PALCE16V8H-10JC/4 K0313CRD
39IC72	DIC484491	74VHCT541AF EL TE2412B
39IC73	DIC484681	TC 74VHCT245AF (EL) TE2412B
39L10	DCL119361	BL02RN2-R62 TD04N
39RA43 to 39RA52	DFB810041	RAC16 4D 220J A TD0804M
39RA53 to 39RA61	DFB810051	RAC16 4D 103J A TD0804M
39RA62 to 39RA65	DFB810041	RAC16 4D 220J A TD0804M
39RA66 to 39RA69	DFB810051	RAC16 4D 103J A TD0804M

AVERY DENNISON

Office Products
Brea, California 92621

Economy
View Binder

MP MASTER
MA31327